DATE 08-11-03

OMI NO.: R0031V2
REV: BASIC

OPERATION & MAINTENANCE INSTRUCTION

MULTI-ELEMENT INTEGRATED TEST 3 (MEIT 3)
LOCAL TEST - SSPF

BOOK 2 OF 3

THIS DOCUMENT DOES NOT CONTAIN HAZARDOUS OPERATIONS

NATIONAL AERONAUTICS AND
SPACE ADMINISTRATION

JOHN F. KENNEDY
SPACE CENTER

RELEASED - Printed documents may be obsolete; validate prior to use.

OMI NO.: R0031V2
DATE 08-11-03 REV: BASIC

THE BOEING COMPANY

MULTI-ELEMENT INTEGRATED TEST 3 (MEIT 3)
LOCAL TEST - SSPF

APPROVED BY:

Eric K. Hanson G110 8/6/03
PAYLOAD TEST CONDUCTOR, BOEING

UB-C1 8/8/03
TEST DIRECTOR, NASA

Dynamics Pies 8/8/03

ASI 8/8/03

SK-BC 8 Aug 03
NODE 2 PROJECT OFFICE, MSFC

Gloria Vigilante UB-G6 8-7-03
TECHNICAL INTEGRATION ENGINEER, NASA

8/7/03
JEM PROJECT TEAM, NASDA

REV-CHANGE	DATE	REASON	PAGES AFFECTED
BASIC	08-11-03		ALL

THIS PROCEDURE DOES NOT CONTAIN HAZARDOUS OPERATIONS

RELEASED - Printed documents may be obsolete; validate prior to use.

OMI BACKUP SIGNATURE SHEET

OMI TITLE: **MULTI-ELEMENT INTEGRATED TEST 3 (MEIT 3) LOCAL TEST - SSPF**

SYSTEM	AGENCY CONTRACTOR /NASA	SIGNATURES CONTRACTOR	NASA
CDH	NASA	N/A	UB-G3 8/7/03
EPS	NASA	N/A	UB-G1 8-7-03
TCS	NASA	N/A	UB-G3 8/8/03
ECLSS	NASA	N/A	UB-G5 8/7/03
C&T	NASA	N/A	UB-G2 8/8/03
QUALITY	NASA	N/A	UB-F3 8/7/03
LOGISTICS	BOEING	8/7/03	N/A
OMD	BOEING	G122 8/8/03	N/A
P/L COMM	CSOC	8/8/03	N/A
MOD	NASA	N/A	
FE	BOEING	N110 8/7/03	N/A
YOPS	BOEING	G124 8/8/03	N/A
VITT	BOEING	VITT 8-7-03	N/A
TCMS O&M	BOEING	N110 8-7-03	N/A
JEM SYSTEM	NASDA	中野屋 壮吾 8-7-03	N/A
SAFETY & QUALITY	NASDA	8/7/03	N/A
PM SYSTEM	MHI	植田 豊 8/7/03	N/A
RMS SYSTEM	NTS		N/A
CBM	NASA	N/A	4064 8/7/03

RELEASED - Printed documents may be obsolete; validate prior to use.

TABLE OF CONTENTS

COVER PAGE
APPROVAL PAGE
DEVIATION LOG
TABLE OF CONTENTS
OBJECTIVES/DESCRIPTION.....1

BAR CHART.....2

SECTION I - INFORMATION

SECTION I OF R0031V1 CONTAINS THE COMMON INFORMATION FOR MEIT3

1.8 APPLICABLE TECHNICAL REQUIREMENTS 4

SECTION II - PRE-OPERATION SETUP INSTRUCTIONS

PRE-OPERATION SETUPS ARE LOCATED IN R0031V1

SECTION III - OPERATION SUPPORT SETUP INSTRUCTIONS

OPERATION SUPPORT SETUPS ARE LOCATED IN R0031V1

SECTION IV - OPERATION INSTRUCTIONS

100-000 **CALL TO STATIONS** 12
101-000 **MEIT3 INITIALIZATION** 20
102-000 **JEM B STRING ACTIVATION (JCP-B PRIMARY)** 25
103-000 **NODE 2 B STRING PARTIAL DEACTIVATION** 131
104-000 **NODE 2 B STRING RE-ACTIVATION** 139
105-000 **EPS B STRING POWER QUALITY AND EME** 146
106-000 **B STRING HEALTH STATUS CHECKS** 171
107-000 **JEM A STRING ACTIVATION (JCP-A STANDBY)** 176
108-000 **NODE 2 A STRING PARTIAL DEACTIVATION** 252
109-000 **NODE 2 A STRING RE-ACTIVATION** 270
110-000 **EPS A STRING POWER QUALITY AND EME** 300
111-000 **A STRING HEALTH STATUS CHECKS** 333
112-000 **CDH BUS REDUNDANCY, CB-EXT-2 AND CBM CHECKS** 338
113-000 **RESERVED** 363
114-000 **JEM MODULE DEACTIVATION (JCP-B PRIMARY)** 364
115-000 **JEM A STRING ACTIVATION (JCP-A PRIMARY)** 418
116-000 **CDH BUS REDUNDANCY, CB-EXT-1, AND CBM CHECKS** 506
117-000 **JEM A STRING DEACTIVATION (JCP-A PRIMARY)** 525

SECTION V - POST OPERATION INSTRUCTIONS

118-000 **POST OPERATION INSTRUCTION – PROCEDURE CLOSURE** 558

RELEASED - Printed documents may be obsolete; validate prior to use.

ILLUSTRATIONS.....559

APPENDIX QA.....560

APPENDIX S - SAFETY DATA SHEETS.....561

APPENDIX Z - EMERGENCY INSTRUCTIONS

EMERGENCY INSTRUCTIONS ARE LOCATED IN R0031V3

THIS PAGE INTENTIONALLY LEFT BLANK

RELEASED - Printed documents may be obsolete; validate prior to use.

OBJECTIVES

OBJECTIVES/DESCRIPTION ARE LOCATED IN R0031V1

RELEASED - Printed documents may be obsolete; validate prior to use.

BAR CHART

NOT APPLICABLE

RELEASED - Printed documents may be obsolete; validate prior to use.

SECTION I - INFORMATION

SECTION I OF R0031V1 CONTAINS THE COMMON INFORMATION FOR MEIT3

RELEASED - Printed documents may be obsolete; validate prior to use.

1.8 APPLICABLE TECHNICAL REQUIREMENTS

1.8.1 FLIGHT HARDWARE OMRSD

NUMBER	TITLE	SEQ-STEP
A3000MD.100-A (CHANNEL A – BUS	CB-EXT-1 BUS REDUNDANCY	116-038
A3000MD.100-A (CHANNEL A – GOOD POLLING	CB-EXT-1 BUS REDUNDANCY	116-036
A3000MD.100-A (CHANNEL B – BUS	CB-EXT-1 BUS REDUNDANCY	116-029
A3000MD.100-A (CHANNEL B – GOOD POLLING	CB-EXT-1 BUS REDUNDANCY	116-027
A3000MD.100-B (CHANNEL A – BUS	CB-EXT-2 BUS REDUNDANCY	112-039
A3000MD.100-B (CHANNEL A – GOOD POLLING	CB-EXT-2 BUS REDUNDANCY	112-037
A3000MD.100-B (CHANNEL B - BUS	CB-EXT-2 BUS REDUNDANCY	112-030
A3000MD.100-B (CHANNEL B – GOOD POLLING	CB-EXT-2 BUS REDUNDANCY	112-028
A3000ME.100-A (JEM PM B V RIPPLE CONFIG	JEM PMB V RIPPLE CONFIG 1	105-006
A3000ME.100-B (JEM PM B V RIPPLE CONFIG	JEM PMB V RIPPLE CONFIG 2	105-017
A3000ME.100-C (JEM PM B NOISE CONFIG 3)	JEM PMB NOISE CONFIG 3	105-038
A3000ME.100-D (JEM PM B V RIPPLE CONFIG	JEM PMB V RIPPLE CONFIG 3	105-038
A3000ME.100-E (JEM PM B NOISE CONFIG 4)	JEM PMB NOISE CONFIG 4	105-054
A3000ME.100-F (JEM PM B V RIPPLE CONFIG	JEM PMB V RIPPLE CONFIG 4	105-054
A3000ME.100-G (JEM PM A V RIPPLE CONFIG	JEM PMA V RIPPLE CONFIG 5	110-006
A3000ME.100-H (JEM PM A V RIPPLE CONFIG	JEM PMA V RIPPLE CONFIG 6	110-017
A3000ME.100-I (JEM PM A V RIPPLE CONFIG	JEM PMA V RIPPLE CONFIG 7	110-029
A3000ME.100-J (JEM PM A NOISE CONFIG 8)	JEM PMA NOISE CONFIG 8	110-056
A3000ME.100-K (JEM PM A V RIPPLE CONFIG	JEM PMA V RIPPLE CONFIG 8	110-056
A3000ME.100-L (JEM PM A NOISE CONFIG 9)	JEM PMA NOISE CONFIG 9	110-077
A3000ME.100-M (JEM PM A V RIPPLE CONFIG	JEM PMA V RIPPLE CONFIG 9	110-077
A3000ME.200-A (JEM PM B S-S V CONFIG 1)	JEM PMB S-S V CONFIG 1	105-007
A3000ME.200-B (JEM PM B TRANS V CONFIG	JEM PMB TRANS V CONFIG 1	105-011

RELEASED - Printed documents may be obsolete; validate prior to use.

A3000ME.200-C (JEM PM B S-S V CONFIG 2)	JEM PMB S-S V CONFIG 2	105-018
A3000ME.200-D (JEM PM B TRANS V CONFIG	JEM PMB TRANS V CONFIG 2	105-022
A3000ME.200-E (JEM PM B S-S V CONFIG 3)	JEM PMB S-S V CONFIG 3	105-039
A3000ME.200-F (JEM PM B TRANS V CONFIG	JEM PMB TRANS V CONFIG 3	105-043
A3000ME.200-G (JEM PM B S/L Z CONFIG 3)	JEM PMB S/L Z CONFIG 3	105-046
A3000ME.200-H (JEM UOP S-S V CONFIG 3)	JEM UOP S-S V CONFIG 3	105-039
A3000ME.200-I (JEM UOP SOURCE Z CONFIG	JEM UOP SOURCE Z CONFIG 3	105-049
A3000ME.200-J (JEM PM B S-S V CONFIG 4)	JEM PMB S-S V CONFIG 4	105-055
A3000ME.200-K (JEM PM B TRANS V CONFIG	JEM PMB TRANS V CONFIG 4	105-059
A3000ME.200-L (JEM PM B S/L Z CONFIG 4)	JEM PMB S/L Z CONFIG 4	105-062
A3000ME.200-M (JEM PM A S-S V CONFIG 5)	JEM PMA S-S V CONFIG 5	110-007
A3000ME.200-N (JEM PM A TRANS V CONFIG	JEM PMA TRANS V CONFIG 5	110-011
A3000ME.200-O (JEM PM A S-S V CONFIG 6)	JEM PMA S-S V CONFIG 6	110-018
A3000ME.200-P (JEM PM A TRANS V CONFIG	JEM PMA TRANS V CONFIG 6	110-022
A3000ME.200-Q (JEM PM A S-S V CONFIG 7)	JEM PMA S-S V CONFIG 7	110-030
A3000ME.200-R (JEM PM A TRANS V CONFIG	JEM PMA TRANS V CONFIG 7	110-034
A3000ME.200-S (JEM PM A S-S V CONFIG 8)	JEM PMA S-S V CONFIG 8	110-057
A3000ME.200-T (JEM PM A TRANS V CONFIG	JEM PMA TRANS V CONFIG 8	110-061
A3000ME.200-U (JEM PM A S/L Z CONFIG 8)	JEM PMA S/L Z CONFIG 8	110-064
A3000ME.200-V (JEM PM A S-S V CONFIG 9)	JEM PMA S-S V CONFIG 9	110-078
A3000ME.200-W (JEM PM A TRANS V CONFIG	JEM PMA TRANS V CONFIG 9	110-082
A3000ME.200-X (JEM PM A S/L Z CONFIG 9)	JEM PMA S/L Z CONFIG 9	110-085
A3000ME.300-A (PARTIAL EPS	EPS CHANNELIZATION PDU B1	102-052
A3000ME.300-A (PARTIAL EPS	EPS CHANNELIZATION PDU B1	102-093 102-112 102-127
A3000ME.300-B (PARTIAL EPS	EPS CHANNELIZATION PDB EPS2	102-189 105-024 105-025 105-026 105-027

RELEASED - Printed documents may be obsolete; validate prior to use.

A3000ME.300-C (PARTIAL EPS	EPS CHANNELIZATION PDB TCS2	102-055 102-058 102-169 102-171
A3000ME.300-D (PARTIAL EPS	EPS CHANNELIZATION PDB B1	102-116 102-123 102-129 105-028 105-029 105-030 105-031
A3000ME.300-E (PARTIAL EPS	EPS CHANNELIZATION PIB B1	102-044 102-057 102-153
A3000MI.100-A (ECLSS CABIN SMOKE	JEM PM B STRING ACTIVATION	102-185
A3000MI.100-A (ECLSS IMV FAN SPEED B)	JEM PM B STRING ACTIVATION	102-191
A3000MI.100-A (ECLSS IMV VALVE B)	JEM PM B STRING ACTIVATION	102-187
A3000MI.100-A (ECLSS THC B)	JEM PM B STRING ACTIVATION	102-196
A3000MI.100-A (EPS PDB EPS2)	JEM PM B STRING ACTIVATION	102-120
A3000MI.100-A (EPS PDU B1)	JEM PM B STRING ACTIVATION	102-029
A3000MI.100-A (EPS PDU B2)	JEM PM B STRING ACTIVATION	102-105
A3000MI.100-A (EPS PIB B1)	JEM PM B STRING ACTIVATION	102-037
A3000MI.100-A (PARTIAL CDH DIU B1)	JEM PM B STRING ACTIVATION	102-103 102-104
A3000MI.100-A (PARTIAL CDH DIU B2)	JEM PM B STRING ACTIVATION	102-124 102-125
A3000MI.100-A (PARTIAL CDH DIU B3)	JEM PM B STRING ACTIVATION	102-117 102-118
A3000MI.100-A (PARTIAL CDH DIU EPS 2)	JEM PM B STRING ACTIVATION	102-023 102-099 102-111
A3000MI.100-A (PARTIAL CDH JCP B)	JEM PM B STRING ACTIVATION	102-092 102-094 102-095 102-096
A3000MI.100-A (TCS 1)	JEM PM B STRING ACTIVATION	102-217
A3000MI.100-A (TCS 2)	JEM PM B STRING ACTIVATION	102-083 102-218
A3000MI.100-A (TCS 3)	JEM PM B STRING ACTIVATION	102-215

RELEASED - Printed documents may be obsolete; validate prior to use.

A3000MI.100-B (EPS N2ZEN-2B)	NODE2 RE-ACTIVATION FOR JEM B STRING	102-021
A3000MI.100-B (EPS N2ZEN-3A)	NODE2 RE-ACTIVATION FOR JEM B STRING	102-016
A3000MI.100-B (PARTIAL TCS)	NODE2 RE-ACTIVATION FOR JEM B STRING	104-015 104-016 104-018 104-019
A3000MI.100-C (ECLSS CPS A1)	JEM PM A STRING ACTIVATION	107-067
A3000MI.100-C (ECLSS CPS A2)	JEM PM A STRING ACTIVATION	107-069
A3000MI.100-C (ECLSS IMV FAN SPEED A)	JEM PM A STRING ACTIVATION	107-156
A3000MI.100-C (ECLSS IMV VALVE A)	JEM PM A STRING ACTIVATION	107-152
A3000MI.100-C (ECLSS SMOKE DETECTOR A)	JEM PM A STRING ACTIVATION	107-135
A3000MI.100-C (ECLSS THC A)	JEM PM A STRING ACTIVATION	107-122
A3000MI.100-C (EPS PDB_EPS1)	JEM PM A STRING ACTIVATION	107-044
A3000MI.100-C (EPS PDU A2)	JEM PM A STRING ACTIVATION	107-023
A3000MI.100-C (EPS PDU_A1)	JEM PM A STRING ACTIVATION	107-020
A3000MI.100-C (EPS PIB_A1)	JEM PM A STRING ACTIVATION	107-046
A3000MI.100-C (PARTIAL CDH DIU A2)	JEM PM A STRING ACTIVATION	107-041 107-042
A3000MI.100-C (PARTIAL CDH DIU A3)	JEM PM A STRING ACTIVATION	107-050 107-051
A3000MI.100-C (PARTIAL CDH DIU_A1)	JEM PM A STRING ACTIVATION	107-017 107-018
A3000MI.100-C (PARTIAL CDH DIU_EPS1)	JEM PM A STRING ACTIVATION	107-015 107-016
A3000MI.100-C (PARTIAL CDH JCP A)	JEM PM A STRING ACTIVATION	107-062 107-065
A3000MI.100-C (TCS-1)	JEM PM A STRING ACTIVATION	107-111
A3000MI.100-C (TCS-2)	JEM PM A STRING ACTIVATION	107-108
A3000MI.100-C (TCS-3)	JEM PM A STRING ACTIVATION	107-103
A3000MI.100-D (CDH N2-1 MDM STATE,	NODE2 RE-ACTIVATION FOR JEM A STRING	109-022
A3000MI.100-D (ECLSS ASD1)	NODE2 RE-ACTIVATION FOR JEM A STRING	109-074
A3000MI.100-D (ECLSS CPS)	NODE2 RE-ACTIVATION FOR JEM A STRING	109-072
A3000MI.100-D (EPS N2NAD-1B)	NODE2 RE-ACTIVATION FOR JEM A STRING	109-026
A3000MI.100-D (EPS N2NAD-4B)	NODE2 RE-ACTIVATION FOR JEM A STRING	109-030

RELEASED - Printed documents may be obsolete; validate prior to use.

A3000MI.100-D (EPS N2STB-1B)	NODE2 RE-ACTIVATION FOR JEM A STRING	107-009
A3000MI.100-D (EPS N2STB-4A)	NODE2 RE-ACTIVATION FOR JEM A STRING	107-013
A3000MI.100-D (PARTIAL TCS)	NODE2 RE-ACTIVATION FOR JEM A STRING	109-057 109-059
A3000MI.100-E (ECLSS CPS A1)	JEM PM A STRING ACTIVATION	115-116
A3000MI.100-E (ECLSS CPS A2)	JEM PM A STRING ACTIVATION	115-118
A3000MI.100-E (ECLSS IMV FAN SPEED A)	JEM PM A STRING ACTIVATION	115-160
A3000MI.100-E (ECLSS IMV VALVE A)	JEM PM A STRING ACTIVATION	115-156
A3000MI.100-E (ECLSS SMOKE DETECTOR A)	JEM PM A STRING ACTIVATION	115-154
A3000MI.100-E (ECLSS THC A)	JEM PM A STRING ACTIVATION	115-166
A3000MI.100-E (EPS PDB EPS1)	JEM PM A STRING ACTIVATION	115-091
A3000MI.100-E (EPS PDU A1)	JEM PM A STRING ACTIVATION	115-020
A3000MI.100-E (EPS PDU A2)	JEM PM A STRING ACTIVATION	115-076
A3000MI.100-E (EPS PIB A1)	JEM PM A STRING ACTIVATION	115-028
A3000MI.100-E (PARTIAL CDH DIU A1)	JEM PM A STRING ACTIVATION	115-074
A3000MI.100-E (PARTIAL CDH DIU A1)	JEM PM A STRING ACTIVATION	115-075
A3000MI.100-E (PARTIAL CDH DIU A2)	JEM PM A STRING ACTIVATION	115-088 115-089
A3000MI.100-E (PARTIAL CDH DIU A3)	JEM PM A STRING ACTIVATION	115-095 115-096
A3000MI.100-E (PARTIAL CDH DIU EPS1)	JEM PM A STRING ACTIVATION	115-016 115-070 115-080
A3000MI.100-E (PARTIAL CDH JCP A)	JEM PM A STRING ACTIVATION	115-063 115-065 115-066 115-067
A3000MI.100-E (TCS 3)	JEM PM A STRING ACTIVATION	115-068
A3000MI.100-E (TCS-1)	JEM PM A STRING ACTIVATION	115-058
A3000MI.100-E (TCS-2)	JEM PM A STRING ACTIVATION	115-057
A3000MS.100-A (CPA1 POWERED/ACTIVATED)	ACBM PRIMARY POWER	116-016
A3000MS.100-A (CPA4 POWERED/ACTIVATED)	ACBM PRIMARY POWER	116-025
A3000MS.100-B (CPA2 POWERED/ACTIVATED W/BBOLT)	ACBM SECONDARY POWER	112-046

RELEASED - Printed documents may be obsolete; validate prior to use.

A3000MS.100-B (CPA2 POWERED/ACTIVATED)	ACBM SECONDARY POWER	112-016
A3000MS.100-B (CPA3 POWERED/ACTIVATED)	ACBM SECONDARY POWER	112-026
A3000MS.110-A (RS485 A)	ACBM RS485 CHANNEL A	112-034
A3000MS.120-B (CPA-2)	ACBM MASTER CONTROLLER TEST, CPA 2	112-046
A3000MS.140-A (BBOLT CMD)	ACBM BBOLD COMMAND, 16 BOLTS	112-046

RELEASED - Printed documents may be obsolete; validate prior to use.

SECTION II - PRE-OPERATION SETUP INSTRUCTIONS

SEQ/STEP	CMD	RESP	DESCRIPTION	VERIF.

PRE-OPERATION SETUPS ARE LOCATED IN R0031V1

RELEASED - Printed documents may be obsolete; validate prior to use.

SECTION III - OPERATION SUPPORT SETUP INSTRUCTIONS

SEQ/STEP	CMD	RESP	DESCRIPTION	VERIF.

OPERATION SUPPORT SETUPS ARE LOCATED IN R0031V1

RELEASED - Printed documents may be obsolete; validate prior to use.

SECTION IV - OPERATION INSTRUCTIONS

SEQ/STEP	CMD	RESP	DESCRIPTION	VERIF.
100-000			**CALL TO STATIONS**	
100-001	PTC	DKQM	RECORD THE FOLLOWING INFORMATION: GMT _____:_____:_____ (DAY:HR:MIN)	
				NV:_____
100-002	PTC 7-4428	*PLC	VERIFY THE FOLLOWING SYSTEMS ARE OPERATIONAL AND READY TO SUPPORT OMI R0031. 1. OIS INDUSTRIAL AREA 2. OIS VOICE RECORDING INITIATED 3. SSPF TPA PAGING 4. PCS DIGITAL VIDEO RECORDING STARTED (SSPF CR2) 5. SSPF HIGHBAY/INTERMEDIATE BAY CAMERA'S BELOW ARE RECORDED. RECORD CAMERA LOCATIONS: TCS INTERMEDIATE BAY (TCS IB)_____ TCS HIGH BAY (TCS HB)_____ NODE 2 INTERNAL (N2 INT)_____ NODE 2 EXTERNAL (N2 EXT)_____ JEM INTERNAL (JEM INT) _____ JEM EXTERNAL (JEM EXT)_____ JEM SLT (SLT) _____ JEM RLT (RLT)_____ JEM RMS (RMS) _____ FE RWS (FE RWS)_____	
				NV:_____

RELEASED - Printed documents may be obsolete; validate prior to use.

SECTION IV - OPERATION INSTRUCTIONS

SEQ/STEP	CMD	RESP	DESCRIPTION	VERIF.
			NOTE THE FOLLOWING STEP IS ONLY REQUIRED FOR THE FIRST MEIT3 POWER UP. IT CAN BE REPERFORMED IF REQUIRED.	
100-003	PTC	DESE DKQN	VERIFY MEIT3 SYSTEMS TEST WALKDOWN PER R2008 SEQUENCE 19 IS COMPLETE.	NV:_____ NOT PERFORMED:_____
100-004	PTC PA	ALL	PERSONNEL PARTICIPATING IN THE OMI: R0031 – MULTI-ELEMENT INTEGRATED TEST 3 REPORT ON STATION CHANNEL 052 FOR TEST STATUS CHECKS.	
100-005	PTC		ANNOTATE VOICE TAPE DOCUMENT NO: R0031V1 REV: _____ DATED: _____ R0031V2 REV: _____ DATED: _____ R0031V3 REV: _____ DATED: _____ GMT _____:_____:_____ (DAY:HR:MIN) LOCATION: SPACE STATION PROCESSING FACILITY FOOTPRINT(S): 5, 6	NV:_____
100-006	PTC	DKQM	REPORT CONSTRAINT STATUS AND RECORD LAST PERMANENT AND TEMPORARY DEVIATION NUMBERS. P _____ T _____ ITEM NO. VOL/SEQ. CONSTRAINTS: _____ ___/_____ _____ ___/_____	NV:_____

RELEASED - Printed documents may be obsolete; validate prior to use.

SECTION IV - OPERATION INSTRUCTIONS

SEQ/STEP	CMD	RESP	DESCRIPTION	VERIF.
100-007	PTC	DKQM	PERFORM THE FOLLOWING PRE-OPERATION SETUPS PER R0031V1. SOME PRE-OPS MAY BE REPEATED WHILE OTHERS MAY BE PERFORMED ONLY ONE TIME.	
				NP:
			SEQ 1 - MISSION UNIQUE DATA	_____
			SEQ 2 - COMM SUPPORT PREPS	_____
			SEQ 3 - TCMS PREPS	_____
			SEQ 4 - LAPTOP COMPUTER CONFIGURATION	_____
			SEQ 5 - FLIGHT EMULATOR AND TEST SITE PREPS	_____
			SEQ 6 - CHECS HARDWARE CONFIGURATION	_____
			SEQ 8 – PRE-MEIT3 TCS SETUPS AND VALVE CONFIGURATION VERIFICATIONS	_____
			SEQ 9 - EPS/EME PREPS	_____
			SEQ 11 - EPS PDAS ACTIVATION	_____
			SEQ 12 - PLRPC PREPS	_____
			SEQ 13 – TCS VALVE CONFIGURATION FOR JEM A STRING ACTIVATION (JCP A PRIMARY)	_____
			SEQ 14 – CONNECT PCS LAPTOP TO NODE2 UTILITY OUTLET PANEL	_____
			SEQ 15 – VIDEO PRE-OPS	_____
			SEQ 16 – JEM RMS	_____
			SEQ 17 – DAILY TCS GSE ACTIVATION	_____
			SEQ 18 – PRE-TEST WALKDOWN	_____
				NV:_____

RELEASED - Printed documents may be obsolete; validate prior to use.

SECTION IV - OPERATION INSTRUCTIONS

SEQ/STEP	CMD	RESP	DESCRIPTION	VERIF.
			NOTE THE FOLLOWING PRE-OP IS PERFORMED AFTER ALL GSE SYSTEMS HAVE BEEN ACTIVATED. THE NOT PERFORMED OPTION MAY BE SELECTED IF NOT REQUIRED TO SUPPORT TESTING.	
100-008	PTC	KEPS DKQM	PERFORM FACILITY EME MEASUREMENTS PRE-OP PER SEQUENCE 10. REPORT COMPLETE. START GMT _____:_____:_____ (DAY:HR:MIN) COMPLETE GMT _____:_____:_____ (DAY:HR:MIN)	NV:_____ NOT PERFORMED:_____
100-009	PTC	DKQM	REPORT TEST READINESS STATUS: **NODE 2** NPO – MSFC NODE 2 PROJECT OFFICE (MSFC) **JEM LAUNCH SITE SUPPORT TEAM** TLM – MHI TASK LEADER (FOOTPRINT) REPORTS FOR: TLT – NTS TASK LEADER SLT – MHI SLT OPERATOR (INSIDE JEM) RLT - RLT OPERATOR (INSIDE JEM) MJ1 – JEM OPERATOR (FOOTPRINT) NFT1 - NASDA FLUID TECHNICIAN1 (FOOTPRINT) NFT2 - NASDA FLUID TECHNICIAN2 (FOOTPRINT) NFT3 - NASDA FLUID TECHNICIAN3 NFT4 - NASDA FLUID TECHNICIAN4 (FOOTPRINT) NET - NASDA ELECTRICAL TECHNICIAN (FOOTPRINT) ARMS – JEM ARM SIMULATOR OPERATOR NSQ – NASDA SAFETY & QUALITY	

RELEASED - Printed documents may be obsolete; validate prior to use.

SECTION IV - OPERATION INSTRUCTIONS

SEQ/STEP	CMD	RESP	DESCRIPTION	VERIF.

GENERAL
MS1 – MISSION SPECIALIST/PCS OPERATOR (ANY PCS LOCATION)
YOPS – BOEING OPERATIONS ENGINEER (FOOTPRINT)
REPORTS FOR:
- SST1 – BOEING STATION TECHNICIAN (FOOTPRINT)
- SNT1 – BOEING NODE TECHNICIAN (INSIDE NODE)
- SJT1 – BOEING JEM TECHNICIAN (INSIDE JEM)

EPS
KEPS – NASA ELECTRICAL POWER SYSTEMS ENGR (CONTROL ROOM)
REPORTS FOR:
- KEME – NASA EME SYSTEMS ENGR (CONTROL ROOM)
- KEP1 – NASA ELECTRICAL POWER SUPPORT ENGR (FOOTPRINT)
- SDAS – BOEING POWER DATA ACQUISITION SYST ENG (CONTROL ROOM)
- SQSE – BOEING POWER QUALITY SYSTEM ENGINEER (FOOTPRINT)
- DESE – BOEING SUPPORT EQUIPMENT ENGINEER (FOOTPRINT)
- DET1 – BOEING SUPPORT EQUIPMENT TECHNICIAN (FOOTPRINT)

C&DH
KCDH – NASA C&DH SYSTEMS ENGR (CONTROL ROOM)
KFSW – NASA FLIGHT SOFTWARE ENGR (CONTROL ROOM)

FLUIDS
KTCS – NASA FLUID SYSTEMS LEAD ENGR (CONTROL ROOM)
REPORTS FOR:
- KECL – NASA ECLSS LEAD ENGR(CONTROL ROOM)
- KTCN – NASA THERMAL CONTROL NODE ENGINEER (CONTROL ROOM)
- SFSG – BOEING FLUID SYSTEM GSE ENGINEER (INTERMEDIATE BAY)
- KFWT – BOEING FLUID TECHNICIAN (INTERMEDIATE BAY)

RELEASED - Printed documents may be obsolete; validate prior to use.

SECTION IV - OPERATION INSTRUCTIONS

SEQ/STEP	CMD	RESP	DESCRIPTION	VERIF.
			C&T KCTE – NASA C&T SYSTEMS ENGR (CONTROL ROOM) REPORTS FOR: KCT1 – NASA C&T ENGINEER (FOOTPRINT) SCNT – BOEING C&T, HIGH RATE ENGINEER (C&T LAB) STVE – BOEING VIDEO SYSTEMS ENGINEER (C&T LAB) SCT1 – BOEING C&T TECHNICIAN (C&T LAB)	
			QUALITY DKQE – NASA QUALITY ENGINEER (QM ROOM) DKQM – NASA QUALITY ASSURANCE MONITOR (QM ROOM) REPORTS FOR: DKQN – NASA QUALITY ASSURANCE (FOOTPRINT) *MQE – MISSION QUALITY ENGINEER - BOEING (QM ROOM) DCQM - BOEING QUALITY ASSURANCE MONITOR (QM ROOM) DCQA – BOEING STATION QUALITY ASSURANCE (FOOTPRINT)	
			FLIGHT EMULATOR SSFE - BOEING FLIGHT EMULATOR SYSTEMS ENGR REPORTS FOR: SCDH - BOEING FLIGHT EMULATOR C&DH ENGR SET1 – BOEING FLIGHT EMULATOR TECHNICIAN	
			TCMS ACME – BOEING TCMS SYSTEM ENGR (TCMS ROOM)	
			TCDS STEO – BOEING TCDS SYSTEM ENGR (TCDS ROOM)	
			TEST MANAGEMENT NTD – NASA TEST DIRECTOR (CONTROL ROOM) *NTC – NASDA TEST CONDUCTOR (CONTROL ROOM) TIE – NASA TECHNICAL INTEGRATION ENGINEER (CONTROL ROOM)	
100-010	PTC	ALL	ALL TEST TEAM PERSONNEL STAND BY FOR PRETEST BRIEFING. 1. MAIN TEST OBJECTIVES/SCHEDULE 2. WADS/REVISIONS/DEVIATIONS 3. CONSTRAINTS 4. HAZARDS 5. TEST DISCIPLINE	

RELEASED - Printed documents may be obsolete; validate prior to use.

SECTION IV - OPERATION INSTRUCTIONS

SEQ/STEP	CMD	RESP	DESCRIPTION	VERIF.
100-011	PTC	ALL	EMERGENCY SHUTDOWNS ARE CONTAINED IN APPENDIX Z OF OMI R0031 VOLUME 3. ALL PERSONNEL SHALL BE FAMILIAR WITH THE INSTRUCTIONS PERTAINING TO THEIR STATION.	
100-012	PTC	ALL	SSPF EMERGENCY PROCEDURES, EVACUATION ROUTES, EMERGENCY EQUIPMENT LOCATIONS, PERSONNEL FUNCTIONS AND RESPONSIBILITIES ARE CONTAINED IN BP4090.	
100-013	PTC	ALL	PERSONNEL IN THE SSPF WILL EVACUATE ALL LEVELS USING NEAREST STAIRWAYS. ALL PERSONNEL SHALL BE FAMILIAR WITH ALL EXITS FROM THE AREA IN WHICH THEY ARE WORKING IN ACCORDANCE WITH BP4090 CAPPS EMERGENCY PREPAREDNESS PLAN.	
100-014	PTC	ALL	ALL PERSONNEL ACTIVELY SUPPORTING OMI R0031, STAY ON CH 052 AND UTILIZE OIS CH 051 FOR OFFLINE INFORMATION/COORDINATION. ALL CAUTIONS AND WARNINGS SHALL BE READ OVER THE NET PRIOR TO EXECUTION.	
100-015	PTC	ALL	FOR ALL STEPS WITH A DEVIATION INITIATED AGAINST IT, THE DEVIATION SHALL BE IDENTIFIED OVER THE NET PRIOR TO PERFORMING.	
100-016	PTC	KFWT	VERIFY PASSIVE COOLING VIA GACU IS` OPERATIONAL.	
100-017	PTC		REPORT FE/TEST SITE READINESS STATUS:	
			TEST SITE:	
		SSFE	1. FLIGHT EMULATOR POWERED UP/CONFIGURED.	
		ACME	2. TCMS PREPS COMPLETED.	
		STEO	3. TCDS PREPS COMPLETED.	
				NV:_____
100-018	PTC		VERIFY THAT THE EMERGENCY POWER OFF BUTTON IS EASILY ACCESSIBLE (NORTH WALL OF CONTROL ROOM #2)	
				NV:_____

RELEASED - Printed documents may be obsolete; validate prior to use.

SECTION IV - OPERATION INSTRUCTIONS

SEQ/STEP	CMD	RESP	DESCRIPTION	VERIF.
100-019	PTC	KTCS	VERIFY THAT JEM GSE COOLING IS ACTIVE	
100-020	PTC	YOPS	ACTIVATE BLUE POWERED ON TESTING LIGHTS FOR NODE 2 AND JEM	
100-021	PTC	DKQM	CALL TO STATIONS COMPLETE.	
			GMT _____:_____:_____ (DAY:HR:MIN)	
				NV:_____

RELEASED - Printed documents may be obsolete; validate prior to use.

SECTION IV - OPERATION INSTRUCTIONS

SEQ/STEP	CMD	RESP	DESCRIPTION	VERIF.
101-000			**MEIT3 INITIALIZATION**	
101-001	PTC	DKQM	RECORD THE FOLLOWING INFORMATION:	
			GMT _____:_____:_____ (DAY:HR:MIN)	
				NV:_____
			NOTE	
			PERFORM THE FOLLOWING 2 STEPS AS REQUIRED IN PREPARATION FOR JEM ACTIVATION.	
101-002	PTC	TLM DKQM	PERFORM JEM DATA PROCESSING EQUIPMENT ACTIVATION PER JTP-321014. REPORT COMPLETE.	
			START GMT _____:_____:_____ (DAY:HR:MIN)	
			COMPLETE GMT _____:_____:_____ (DAY:HR:MIN)	
				NV:_____
				NOT PERFORMED:_____
101-003	PTC	TLM	START DPE DATA LOGGING	
				NOT PERFORMED:_____

RELEASED - Printed documents may be obsolete; validate prior to use.

SECTION IV - OPERATION INSTRUCTIONS

SEQ/STEP	CMD	RESP	DESCRIPTION	VERIF.
			NOTE PERFORM THE FOLLOWING STEP AS REQUIRED IN PREPARATION FOR JEM ACTIVATION. THE REMAINDER OF THE MEIT3 INITIALIZATION SEQUENCE CAN BE PERFORMED IN PARALLEL WITH JEM COOLING PREPARATIONS UP TO THE START OF JEM ACTIVATION. THE JEM ACTIVATION CANNOT BE STARTED UNTIL JEM COOLING PREPARATIONS ARE COMPLETE.	
101-004	PTC	KTCS DKQM	PERFORM DAILY TCS GSE ACTIVATION PER R0031V1 PRE-OPERATION SETUP SEQUENCE 17. REPORT COMPLETE. START GMT _____:_____:_____ (DAY:HR:MIN) COMPLETE GMT _____:_____:_____ (DAY:HR:MIN)	
				NV:_____
				NOT PERFORMED:_____

RELEASED - Printed documents may be obsolete; validate prior to use.

SECTION IV - OPERATION INSTRUCTIONS

SEQ/STEP	CMD	RESP	DESCRIPTION	VERIF.
			NOTE THE FOLLOWING VERIFICATION WILL VERIFY THAT C&C CLASS 1 C&W RESPONSE APPLICATIONS ARE INHIBITED FOR TEST.	
101-005	KCDH		TCMS (DMON) VERIFY: 1. ENG: CFV CURRENT VALUE TABLE COMMAND & CONTRL RAPID DEPRESS RESPONSE ENABLE INDICATOR- FALSE PUI: LADP01MDCUKJJ 2. ENG: CFV CURRENT VALUE TABLE CMD & CONTROL TOXIC ATMOSPHERE RESPONSE ENABLE INDICATOR– FALSE PUI: LADP01MDCUKMJ 3. ENG: CFV CURRENT VALUE TABLE COMMAND & CONTROL FIRE RESPONSE ENABLE INDICATOR – FALSE PUI: LADP01MDCUKKJ 4. ENG:JEM FIRE ISOLATION ENABLED – FALSE PUI: LADP01MDD7GWJ 5. ENG: CFV NODE2 FIRE ISOLATION ENABLED – FALSE PUI: LADP01MDD9UIJ 6. ENG: FDS INT FIRE SAFING INDICATOR – DISABLED PUI: LADP08MD5689J	
101-006	KEPS	DET1 DKQN	VERIFY EPS MANUAL SWITCHES ARE IN THE OPEN POSITION FOR BOTH JEM A STRING POWER AND B STRING POWER	

TNV:_____

RELEASED - Printed documents may be obsolete; validate prior to use.

SECTION IV - OPERATION INSTRUCTIONS

SEQ/STEP	CMD	RESP	DESCRIPTION	VERIF.

NOTE

PERFORM THE FOLLOWING STEP IF THE NODE 2 CORE SYSTEMS HAVE NOT BEEN ACTIVATED.

101-007 TIE PTC DKQM PERFORM NODE2 ACTIVATION VIA MATE SCRIPT PER R01120V1 SEQUENCE 113

START GMT _____:_____:_____ (DAY:HR:MIN)

COMPLETE GMT _____:_____:_____ (DAY:HR:MIN)

NV:_____

NOT PERFORMED:_____

NOTE

PERFORM THE FOLLOWING STEP AS REQUIRED TO ACTIVATE NODE 2 SYSTEMS NEEDED TO SUPPORT THE TEST.

101-008 TIE PTC DKQM PERFORM NODE 2 NON CORE ACTIVATION VIA PCS PER R01120V1 SEQUENCE 115. SELECT SYSTEMS FROM THE FOLLOWING MATRIX.

COMPONENTS	**MODE/STATUS**	**NOT PERFORMED**
ASD 1	ACTIVATED	
ASD 2	ACTIVATED	
CCAA	OPERATIONAL	
IMV FAN	OPERATIONAL	
VSU-4	OPERATIONAL	
C&W PANEL	ON	
UOP-1	ON	
ATU- 7	ACTIVE	
ATU- 15	ACTIVE	
ABC 3	ACTIVE	
ABC 4	ACTIVE	

START GMT _____:_____:_____ (DAY:HR:MIN)

COMPLETE GMT _____:_____:_____ (DAY:HR:MIN)

NV:_____

NOT PERFORMED:_____

RELEASED - Printed documents may be obsolete; validate prior to use.

SECTION IV - OPERATION INSTRUCTIONS

SEQ/STEP	CMD	RESP	DESCRIPTION	VERIF.
			NOTE THE FOLLOWING STEP WILL NOT BE PERFORMED FOR THE 1J ACTIVATION OMRS TEST AND WILL BE PERFORMED AS REQUIRED TO SUPPORT JEM ACTIVATIONS.	
101-009	PTC DKQM		PERFORM JEM COMMON ACTIVATION (JCP-B PRIMARY) PER R2009 SEQUENCE 17. REPORT COMPLETE. START GMT _____:_____:_____ (DAY:HR:MIN) COMPLETE GMT _____:_____:_____ (DAY:HR:MIN)	NV:_____ NOT PERFORMED:_____
101-010	TIE PTC	PTC DKQM	MEIT3 INITIALIZATION COMPLETE. GMT _____:_____:_____ (DAY:HR:MIN)	NV:_____

RELEASED - Printed documents may be obsolete; validate prior to use.

SECTION IV - OPERATION INSTRUCTIONS

SEQ/STEP	CMD	RESP	DESCRIPTION	VERIF.
102-000			**JEM B STRING ACTIVATION (JCP-B PRIMARY)**	
102-001	PTC	DKQM	RECORD THE FOLLOWING INFORMATION: GMT _____:_____:_____ (DAY:HR:MIN)	NV:_____
102-002	KEPS	DET1 DKQN	VERIF EPS MANUAL SWITCHES ARE IN THE OPEN POSITION FOR BOTH JEM A AND B POWER STRING.	T:_____ NV:_____
102-003	KCDH	MS1	VERIFY USOS PCS CONNECTED TO JEM UOP UOP-B2-AD5 (J3).	
102-004	KCDH TLM	TLM MJ1	VERIFY JEM SLT CONNECTED TO JEM UOP UOP-B2-AD5 (J4).	T:_____
102-005	KCDH		TCMS DMON LOAD E_M3_PRE_JCP_DIU_EPS2 **NOTE** PERFORM THE FOLLOWING 2 STEPS IF C&C CPU UTILIZATION IS NOT THE ACTIVE DATA DUMP.	
102-006	KCDH	SSFE	CES MATE MEIT3_MATE_ACT_CMDS INDEX: 0X013C CMD: START DATA DUMP COMMAND PUI: LADD96IM0522K OPS: PRIM CCS START DATA DUMP TMPLT APID: 10 LDP:10 DUMP TYPE : NORMAL DUMP LENGTH: 86 MEMORY ADDRESS : 0X7DD138 GMT _____:_____:_____ (HR:MIN:SEC)	

RELEASED - Printed documents may be obsolete; validate prior to use.

SECTION IV - OPERATION INSTRUCTIONS

SEQ/STEP	CMD	RESP	DESCRIPTION	VERIF.
102-007	KCDH		TCMS (DUMP) VERIFY CPU UTILIZATION DUMP IS ACTIVE WITH THE FOLLOWING PARAMETERS MEMORY ADDRESS : 0X7DD138	
			NOT PERFORMED:_____ (PREVIOUS 2 STEPS)	
102-008	TIE	PTC DKQM	PERFORM NODE 2 BSTRING PARTIAL DEACTIVATION PER R0031V2 SEQUENCE 103 AND REPORT COMPLETION. START GMT _____:_____:_____ (DAY:HR:MIN) COMPLETE GMT _____:_____:_____ (DAY:HR:MIN)	
				NV:_____

NOTE

THE FOLLOWING TWO STEPS CONFIRM THAT RT FDIR AND RT I/O FOR ALL JEM RTS ON CB-EXT-1/2 BUSES ARE INHIBITED.

102-009 KCDH MS1

PCS
JPM:CDH:CB-EXT-1:RT STATUS

“CB EXT 1 RT STATUS”

‘RT FDIR STATUS’

1. VERIFY RT FDIR STATUS – INH (FOR THE FOLLOWING RTS)

   RT 15 JEM CBM PRI _____
   OPS:
   PRIM_CCS_CB_EXT_1_RT_FDIR_INH_CBM_JEM_PRIM_RT_15
   PUI: LADP01MDAVXFJ

   RT 18 JEM DIU EPS1 _____
   OPS:
   PRIM_CCS_CB_EXT_1_RT_FDIR_INH_JEM_DIU_1_RT_18
   PUI: LADP01MDAVX6J

   RT 19 JCP_A _____
   OPS:
   PRIM_CCS_CB_EXT_1_RT_FDIR_INH_JCP_1_RT_19
   PUI: LADP01MDAVWXJ

RELEASED - Printed documents may be obsolete; validate prior to use.

SECTION IV - OPERATION INSTRUCTIONS

SEQ/STEP	CMD	RESP	DESCRIPTION	VERIF.
			'RT STATUS'	
			2. VERIFY RT STATUS I/O – INH (FOR THE FOLLOWING RTS)	
			RT 15 JEM CB PRI ____ OPS: PRIM_CCS_CB_EXT_1_RT_FDIR_INH_CBM_JEM_IRIM_RT_15 PUI: LADP01MDAVXBJ	
			RT 18 JEM DIU EPS1 _____ OPS: PRIM_CCS_CB_EXT_1_RT_FDIR_INH_JEM_DIU_1_RT_18 PUI: LADP01MDAVX2J	
			RT 19 JCP_A _____ OPS: PRIM_CCS_CB_EXT_1_RT_FDIR_INH_JCP_1_RT_19 PUI: LADP01MDAVWTJ	

RELEASED - Printed documents may be obsolete; validate prior to use.

SECTION IV - OPERATION INSTRUCTIONS

SEQ/STEP	CMD	RESP	DESCRIPTION	VERIF.
102-010	KCDH	MS1	PCS JPM:CDH:CB –EXT –2:RT STATUS “CB EXT 2 RT STATUS” ‘RT FDIR STATUS’ 1. VERIFY: RT FDIR STATUS – INH (FOR THE FOLLOWING RTS) 15 JEM CBM SEC _____ OPS: PRIM_CCS_CB_EXT_2_RT_FDIR_INH_CBM_JEM_SEC_RT_15 PUI: LADP01MDAVV6J 16 JEM RMS MDP _____ OPS: PRIM_CCS_CB_EXT_2_RT_FDIR_INH_JEM_RMS_RT_16 PUI: LADP01MDAVVFJ 18 JEM DIU EPS2 _____ OPS: PRIM_CCS_CB_EXT_2_RT_FDIR_INH_JEM_DIU_2_RT_18 PUI: LADP01MDAVUXJ 19 JCP B _____ OPS: PRIM_CCS_CB_EXT_2_RT_FDIR_INH_JCP_2_RT_19 PUI: LADP01MDAVUOJ	

RELEASED - Printed documents may be obsolete; validate prior to use.

SECTION IV - OPERATION INSTRUCTIONS

SEQ/STEP	CMD	RESP	DESCRIPTION	VERIF.
			'RT STATUS'	
			VERIFY	
			2. RT STATUS – INH (FOR THE FOLLOWING RTS)	
			15 JEM CBM SEC _____ OPS: PRIM_CCS_CB_EXT_2_RT_FDIR_INH_CBM_JEM_SEC_RT_15 PUI: LADP01MDAVV2J	
			16 JEM RMS MDP _____ OPS: PRIM_CCS_CB_EXT_2_RT_FDIR_INH_JEM_RMS_RT_16 PUI: LADP01MDAVVBJ	
			18 DIU EPS2 _____ OPS: PRIM_CCS_CB_EXT_2_RT_FDIR_INH_JEM_DIU_2_RT_18 PUI: LADP01MDAVUTJ	
			19 JCP_B _____ OPS: PRIM_CCS_CB_EXT_2_RT_FDIR_INH_JCP_2_RT_19 PUI: LADP01MDAVUKJ	

RELEASED - Printed documents may be obsolete; validate prior to use.

SECTION IV - OPERATION INSTRUCTIONS

SEQ/STEP	CMD	RESP	DESCRIPTION	VERIF.
102-011	KEPS	DET1 DKQN	CLOSE EPS MANUAL SWITCH FOR JEM B POWER STRING.	
				TNW:_____

NOTE

ONCE DDCU-N2ZEN-3A AND N2ZEN-2B ARE REACTIVATED THE FOLLOWING BOXES WILL HAVE POWER APPLIED: PDU-B1,PDU-B2,PDB-EPS2, DIU EPS2,DIU-B1,PIB-B1.

DDCU N2ZEN-3A ACTIVATION STATUS

102-012	KEPS	MS1	PCS NODE 2:EPS:DDCU N2O3A 'DDCU N203A' VERIFY: INTEGRATION COUNTER – "INCREMENTING" PUI: N2PC18FC0408U ENG: DDCU N2ZEN-3A INTEGRATION COUNTER	

RELEASED - Printed documents may be obsolete; validate prior to use.

SECTION IV - OPERATION INSTRUCTIONS

SEQ/STEP	CMD	RESP	DESCRIPTION	VERIF.
102-013	KEPS	MS1	PCS NODE 2:EPS:DDCU N2O3A 'DDCU N203A' VERIFY/RECORD: INPUT VOLTAGE = _____ (135-173 VDC) PUI: N2PC18FC0420V, N2PC18FC0408U ENG: DDCU N2ZEN-3A INPUT INTEGRATED VOLTAGE INPUT CURRENT = _____ (BD) PUI: N2PC18FC0418C,N2PC18FC0408U ENG: DDCU N2ZEN-3A INTEGRATED CURRENT BASEPLATE TEMP = _____ (< 43.8^{o}C) PUI: N2PC18FC0417T ENG: DDCU N2ZEN-3A BASEPLATE TEMP POWER SUPPLY TEMP = _____ (< 43.8^{o}C) PUI: N2PC18FC0416T ENG: DDCU N2ZEN-3A POWER SUPPLY TEMP (ELEMENT) TEMP = _____ (< 43.8^{o}C) PUI: N2PC18FC0415T ENG: DDCU N2ZEN-3A ELEMENT TEMP **DDCU N2ZEN-3A CONVERTER ACTIVATION**	
102-014	KEPS	MS1	PCS NODE2:EPS:N203A 'DDCU N203A' 1. SELECT 'CONVERTER' 2. CMD: CONVERTER ON - ARM: PUI: LAPC96IM0029K OPS: PMCA DDCU_CONV_ON_TMPLT EXECUTE 3. CMD: DDCU N2O3A CONVERTER ON - ON: PUI: LAPC96IM0029K OPS: PMCA_DDCU_CONV_ON_TMPLT EXECUTE GMT _____:_____:_____ (HR:MIN:SEC)	
102-015	KEPS		TCMS (DMON) VERIFY: – DDCU N203A ON OFF CMD STATUS – ON PUI: N2PC18FC0123J ENG: DDCU N2ZEN-3A ON OFF CMD STATUS	

RELEASED - Printed documents may be obsolete; validate prior to use.

SECTION IV - OPERATION INSTRUCTIONS

SEQ/STEP	CMD	RESP	DESCRIPTION	VERIF.
102-016	KEPS	MS1	PCS NODE 2:EPS:DDCU N2O3A 'DDCU N203A' VERIFY/RECORD: OUTPUT VOLTAGE = _____ (121-128 VDC) PUI: N2PC18FC0421V, N2PC18FC0408U ENG: DDCU N2ZEN-3A OUTPUT INTEGRATED VOLTAGE OUTPUT CURRENT = _____ (0-5 AMPS) PUI: N2PC18FC0419C, N2PC18FC0408U ENG: DDCU N2ZEN-3A OUTPUT INTEGRATED CURRENT ~OMRSD A3000MI.100-B (EPS N2ZEN-3A) **DDCU N2ZEN-2B ACTIVATION STATUS**	
102-017	KEPS	MS1	PCS NODE 2:EPS:DDCU N2O2B 'DDCU N202B' VERIFY: INTEGRATION COUNTER – "INCREMENTING" PUI: N2PC17FC0408U ENG: DDCU N2ZEN-2B INTEGRATION COUNTER	

RELEASED - Printed documents may be obsolete; validate prior to use.

SECTION IV - OPERATION INSTRUCTIONS

SEQ/STEP	CMD	RESP	DESCRIPTION	VERIF.
102-018	KEPS	MS1	PCS NODE 2:EPS:DDCU N2O-2B VERIFY/RECORD: INPUT VOLTAGE = _____ (135-173 VDC) PUI: N2PC17FC0420V, N2PC17FC0408U ENG: DDCU N2ZEN-2B INPUT INTEGRATED VOLTAGE INPUT CURRENT = _____ (BD) PUI: N2PC17FC0418C, N2PC17FC0408U ENG: DDCU N2ZEN-2B INPUT INTEGRATED CURRENT BASEPLATE TEMP = _____ (< 43.8^{o}C) PUI: N2PC17FC0417T ENG: DDCU N2ZEN-2B BASEPLATE TEMP POWER SUPPLY TEMP = _____ (< 43.8^{o}C) PUI: N2PC17FC0416T ENG : DDCU N2ZEN-2B POWER SUPPLY TEMP ELEMENT TEMP = _____ (< 43.8^{o}C) PUI: N2PC17FC0415T DDCU N2ZEN-2B ELEMENT TEMP **DDCU N2ZEN-2B CONVERTER ACTIVATION**	
102-019	KEPS	MS1	PCS NODE2:EPS:DDCU N202B 'DDCU N202B' 1. SELECT 'CONVERTER' DDCU N202B CONVERTER' 2. CMD: DDCU N2O2B CONVERTER ON - ARM PUI: LAPC96IM0029K OPS: PMCA_DDCU_CONV_ON_TMPLT EXECUTE 3. CMD: DDCU N2O2B CONVERTER ON - ON PUI: LAPC96IM0029K OPS: PMCA_DDCU_CONV_ON_TMPLT EXECUTE GMT _____:_____:_____ (HR:MIN:SEC)	

RELEASED - Printed documents may be obsolete; validate prior to use.

SECTION IV - OPERATION INSTRUCTIONS

SEQ/STEP	CMD	RESP	DESCRIPTION	VERIF.
102-020	KEPS		TCMS (DMON) VERIFY: DDCU N202B ON OFF CMD STATUS – ON PUI: N2PC17FC0123J ENG: N2ZEN-2B ON OFF CMD STATUS	
102-021	KEPS	MS1	PCS NODE 2:EPS:DDCU N2O2B VERIFY/RECORD: OUTPUT VOLTAGE = _____ (121-128 VDC) PUI: N2PC17FC0421V, N2PC17FC0408U ENG: DDCU N2Z3N-2B OUTPUT INTEGRATED VOLTAGE OUTPUT CURRENT = _____ (0-5 AMPS) PUI: N2PC17FC0419C, N2PC17FC0408U ENG: DDCU N2ZEN-2B OUTPUT INTEGRATED CURRENT ~OMRSD A3000MI.100-B (EPS N2ZEN-2B)	

RELEASED - Printed documents may be obsolete; validate prior to use.

SECTION IV - OPERATION INSTRUCTIONS

SEQ/STEP	CMD	RESP	DESCRIPTION	VERIF.
			NOTE THE REMAINDER OF THIS SEQUENCE WILL BE PERFORMED IN PARALLEL WITH NODE 2 REACTIVATION PER THE PLANNED ON ORBIT ACTIVATION SCENARIO. JEM ON ORBIT THERMAL CONSTRAINTS ARE NOT APPLICABLE DUE TO GROUND COOLING CONFIGURATION.	
102-022	TIE	PTC DKQM	PERFORM NODE 2 BSTRING REACTIVATION R0031V2 SEQUENCE 104 IN PARALLEL WITH THE REMAINDER OF THIS SEQUENCE START GMT _____:_____:_____ (DAY:HR:MIN) COMPLETE GMT _____:_____:_____ (DAY:HR:MIN)	
				NV:_____

RELEASED - Printed documents may be obsolete; validate prior to use.

SECTION IV - OPERATION INSTRUCTIONS

SEQ/STEP	CMD	RESP	DESCRIPTION	VERIF.

ESTABLISH COMM BETWEEN C&C MDM AND DIU-EPS-2

NOTE

THE DIU MDM RT I/O AND DF STATUS PORTION OF OMRSD A3000MI.100-A (CDH DIU EPS 2) WILL NOT BE SATISFIED UNTIL AFTER THE JCP IS ACTIVATED.

102-023 KCDH MS1 PCS
TASK:1J: JPM CHANNEL B INITIAL ACTIVATION
'JPM CHANNEL B INITIAL ACTIVATION'

'DIU EPS 2'

1. CMD: RT I/O - ENABLE
   PUI: LADD96IM1018K
   OPS: PRIM_CCS_ENA_RT_TMPLT
   EXECUTE:

   GMT _____:_____:_____ (HR:MIN:SEC)

2. VERIFY
   RT I/0 – ENA
   OPS:
   PRIM_CCS_CB_EXT_2_RT_ENA_JEM_DIU_2_RT_18
   PUI: LADP01MDAVUTJ

3. DATA FRAME COUNTER - "INCREMENTING"
   ENG: DIU-III-B STATUS/DISCRETE INPUT DATA FRAME TIME TAG
   PUI: JMDC04FC0011W

4. BIT STATUS – VALID
   ENG: EPS_RACK2_DIU BIT STATUS [ACT]
   PUI: JMDC04FCA60EJ

5. BIT RESULT – NORMAL
   ENG: EPS_RACK2_DIU BIT RESULT [ACT]
   PUI: JMDC04FCA60FJ

6. HEALTH STATUS – NORMAL
   ENG: EPS_RACK2_DIU MONITOR STATUS [ACT]
   PUI: JMDC04FCA601J

~OMRSD A3000MI.100-A (PARTIAL CDH DIU EPS 2)

RELEASED - Printed documents may be obsolete; validate prior to use.

SECTION IV - OPERATION INSTRUCTIONS

SEQ/STEP	CMD	RESP	DESCRIPTION	VERIF.
102-024	KCDH		TCMS (DMON)	
			VERIFY: 1. ENG: EPS_RACK2_DIU HEALTH STATUS SUMMARY [ACT]- NORMAL PUI: JMDC04FCA600J 2. ENG: EPS_RACK _2_DIU_NIA_BUS_ACCESS_TIMEOUT_[ACT] – NORMAL PUI: JMDC04FCA619J 3. ENG: EPS_RACK 2 DIU ADX A/D CONVERTER TIMEOUT [ACT] - NORMAL PUI: JMDC04FCA61AJ 4. ENG: EPS_RACK2_DIU MPU HALT [ACT] - NORMAL PUI: JMDC04FCA61BJ 5. ENG: EPS_RACK2_DIU MPU PARITY ERROR [ACT] - NORMAL PUI: JMDC04FCA61CJ 6. ENG: EPS_RACK2_DIU RAM ECC ERROR [ACT] - NORMAL PUI: JMDC04FCA61DJ 7. ENG: EPS_RACK2_DIU ROM ECC ERROR [ACT] - NORMAL PUI: JMDC04FCA61EJ 8. ENG: EPS_RACK2_DIU SW120_8S BUS ACCESS TIMEOUT [ACT] - NORMAL PUI: JMDC04FCA60ZJ 9. ENG: EPS_RACK2_DIU AOX BUS ACCESS TIMEOUT [ACT] – NORMAL PUI: JMDC04FCA615J 10. ENG: EPS_RACK2_DIU ADX BUS ACCESS TIME0UT [ACT]- NORMAL PUI: JMDC04FCA614J 11. ENG: EPS_RACK2_DIU AIX1 BUS ACCESS TIMEOUT [ACT] – NORMAL PUI: JMDC04FCA617J 12. ENG: EPS RACK2_DIU DOX16P16A BUS ACCESS TIMOUT [ACT] – NORMAL PUI:JMDC04FCA61HJ 13. ENG: EPS_RACK2_DIU DIA BUS ACCESS TIMOUT [ACT]- NORMAL PUI:JMDC04FCA612J 14. ENG:EPS_RACK2_DIU SIO BUS ACCESS TIMOUT [ACT]- NORMAL PUI:JMDC04FCA618J	

RELEASED - Printed documents may be obsolete; validate prior to use.

SECTION IV - OPERATION INSTRUCTIONS

SEQ/STEP	CMD	RESP	DESCRIPTION	VERIF.
			ENABLE FDIR BETWEEN C&C MDM AND DIU EPS 2	
102-025	KCDH	MS1	PCS TASK:JPM CHANNEL B INITIAL ACTIVATION 'DIU-EPS-2' 1. CMD: RT-FDIR – ENABLE PUI: LADD96IM0769K OPS: PRIM_CCS_ENA_RT_FDIR_TMPLT GMT _____:_____:_____ (HR:MIN:SEC) 2. VERIFY: RT-FDIR – ENA OPS: PRIM_CCS_CB_EXT_2_RT_FDIR_INH_JEM_DIU_2_RT _18 PUI: LADP01MDAVUXJ	
			VERIFY JCP B TEMPERATURES	
102-026	KCDH	MS1	PCS TASK: JPM CHANNEL B INITIAL ACTIVATION 'JCP B TEMPERATURES' RECORD : 1. MPC/BIC TEMP 1 - _____DEG C (<35 DEGREE C) ENG: JCP_B MPC/BIC1 TEMP [ACT] PUI: JMDC04FCZB00T 2. MPC/BIC TEMP 2 - _____DEG C(<35 DEGREE C) ENG: JCP_B MPC/BIC2 TEMP [ACT] PUI: JMDC04FCZB01T	

RELEASED - Printed documents may be obsolete; validate prior to use.

SECTION IV - OPERATION INSTRUCTIONS

SEQ/STEP	CMD	RESP	DESCRIPTION	VERIF.

ESTABLISH COMM BETWEEN DIU EPS 2 AND PDU-B1

102-027 KCDH MS1

PCS
TASK:JPM CHANNEL B INITIAL ACTIVATION

'PDU B1'

1. CMD: DIU EPS2/PDU B1 COMM – START
   PUI: LADD96IM1101K
   OPS:JPM_CDH_DIU_B4/PDU_B1_(RS422_CH5)_
   COMM_START_(ACT)

   GMT _____:_____:_____ (HR:MIN:SEC)

2. VERIFY: DATA FRAME COUNTER – "INCREMENTING"
   ENG: SYS_PDU_B DATA FRAME TIME TAG
   PUI: JMDC04FC0081W

3. RECORD: HEALTH STAT SUMMMARY - _____
   ENG: SYS_PDU_B HEALTH STATUS SUMMARY [ACT]
   PUI: JMDC04FCPI00J

NOTE

PERFORM THE FOLLOWING STEP IF HEALTH STATUS SUMMARY IN THE PREVIOUS STEP IS "ERROR"

102-028 KEPS SSFE

CES MATE
MEIT3_MATE_ACT_CMDS
INDEX: 0X0032

CMD PDU_B1 BIT_STATUS - RESET
PUI: LAPX96IM0477K
OPS: JPM_EPS_PDU_B1_STAT_RST_(ACT)

GMT _____:_____:_____ (HR:MIN:SEC)

NOT PERFORMED:_____

RELEASED - Printed documents may be obsolete; validate prior to use.

SECTION IV - OPERATION INSTRUCTIONS

SEQ/STEP	CMD	RESP	DESCRIPTION	VERIF.
102-029	KEPS	MS1	PCS TASK:JPM CHANNEL B INITIAL ACTIVATION 'PDU B1' VERIFY: HEALTH STATUS SUMMARY- NORMAL PUI: JMDC04FCPI00J ENG: SYS_PDU_B HEALTH STATUS SUMMARY [ACT] ~OMRSD A3000MI.100-A (EPS PDU B1)	
102-030	KEPS		TCMS PRE-JCP:SLB1_B 'JPM EPS SYS LOC BUS1: AV STR B' 'PDU B1' RECORD 1. JRPCM1 INPUT VOLTAGE _____ (BD) ENG: SYS_PDU_B RPCM(RPC1-7) INPUT VOLTAGE [ACT] PUI: JMDC04FCPI1XV 2. JRPCM2 INPUT VOLTAGE _____ (BD) ENG: SYS_PDU_B RPCM(RPC8-14) INPUT VOLTAGE [ACT] PUI: JMDC04FCPI1YV **ACTIVATE HCTL B**	
102-031	KEPS	SSFE	CES MATE LOAD AND RUN MATE SCRIPT MEIT3_MATE_ACT_CMDS INDEX: 0X002E CMD: PDU_B1_RPC14 – CLOSE PUI: LAPX96IM0459K OPS: JPM_EPS_PDU_B1_RPC14_(HCTL_B)_CL_ACT GMT _____:_____:_____ (HR:MIN:SEC)	
102-032	KEPS		TCMS PRE-JCP:PDU_B1 'JPM EPS PRE-JCP PDU B1' 'JRPCM2' VERIFY: PDU B1 RPC14 PWR STATUS - CL ENG: SYS_PDU_B RPC14 POWER STATUS [ACT] PUI: JMDC04FCPI0WJ	

RELEASED - Printed documents may be obsolete; validate prior to use.

SECTION IV - OPERATION INSTRUCTIONS

SEQ/STEP	CMD	RESP	DESCRIPTION	VERIF.
102-033	KCDH KEPS	MS1	PCS TASK:JPM CHANNEL B INITIAL ACTIVATION 'HCTL B' 1. CMD: DIU EPS2/HCTL B COMM- START PUI: LADD96IM1100K OPS: JPM_CDH_DIU_B4/HCTL_B_(RS422_CH4)_COMM_STA RT_(ACT) GMT _____:_____:_____ (HR:MIN:SEC) VERIFY: 2. DATA FRAME COUNTER- "INCREMENTING" ENG: PM HCTL B DATA FRAME TIME TAG PUI: JMDC04FC0071W 3. HEALTH STATUS SUMMARY – NORMAL ENG: PM HCTL B HEALTH STATUS SUMMARY [ACT] PUI: JMDC04FCT400J **DEACTIVATE HCTL_B**	
102-034	KCDH KEPS	MS1	PCS TASK:JPM CHANNEL B INITIAL ACTIVATION 'HCTL B' 1. CMD: DIU EPS2/HCTL B COMM- STOP PUI: LADD96IM1105K OPS: JPM_CDH_DIU_B4/HCTL_B_(RS422_CH4)_COMM_STO P_(ACT) GMT _____:_____:_____ (HR:MIN:SEC) 2. VERIFY: DATA FRAME COUNTER - "NOT INCREMENTING" ENG: PM HCTL B DATA FRAME TIME TAG PUI: JMDC04FC0071W	

RELEASED - Printed documents may be obsolete; validate prior to use.

SECTION IV - OPERATION INSTRUCTIONS

SEQ/STEP	CMD	RESP	DESCRIPTION	VERIF.
102-035	KEPS	SSFE	CES MATE LOAD AND RUN MATE SCRIPT MEIT3_MATE_ACT_CMDS INDEX: 0X002F CMD: PDU B1 RPC14 - OPEN PUI: LAPX96IM0460K OPS: JPM_EPS_PDU_B1_RPC14_(HCTL_B)_OP_ACT GMT _____:_____:_____ (HR:MIN:SEC)	
102-036	KEPS		TCMS PRE-JCP:PDU_B1 'JPM EPS PRE-JCP PDU B1' 'JRPCM2' VERIFY: PDU B1 RPC14 PWR STATUS - OP ENG: SYS_PDU_B RPC14 POWER STATUS [ACT] PUI: JMDC04FCPI0WJ	

RELEASED - Printed documents may be obsolete; validate prior to use.

SECTION IV - OPERATION INSTRUCTIONS

SEQ/STEP	CMD	RESP	DESCRIPTION	VERIF.

ESTABLISH COMM BETWEEN DIU-EPS-2 AND PIB-B1

102-037 KCDH MS1 PCS
JPM CHANNEL B INITIAL ACTIVATION

'PIB B1'

1. CMD: DIU EPS2/PIB B1 COMM - START
   PUI: LADD96IM1099K
   OPS:
   JPM_CDH_DIU_B4/PIB_B1_(RS422_CH3)_COMM_START_(ACT)

   GMT _____:_____:_____ (HR:MIN:SEC)

   VERIFY:

2. DATA FRAME COUNTER – "INCREMENTING"
   ENG: PIB_B1 DATA FRAME TIME TAG
   PUI: JMDC04FC0061W

3. BIT STATUS – VALID
   ENG: PIB_B1 BIT STATUS [ACT]
   PUI: JMDC04FCPE39J

4. BIT RESULT – NORMAL
   ENG: PIB_B1 BIT RESULT [ACT]
   PUI: JMDC04FCPE3AJ

5. HEALTH STAT SUMMARY – NORMAL
   ENG: PIB_B1 HEALTH STATUS SUMMARY [ACT]
   PUI: JMDC04FCPE00J

~OMRSD A3000MI.100-A (EPS PIB B1)

RELEASED - Printed documents may be obsolete; validate prior to use.

SECTION IV - OPERATION INSTRUCTIONS

SEQ/STEP	CMD	RESP	DESCRIPTION	VERIF.
			PERFORM EPS MEASUREMENTS	
			NOTE QUIET TIME IS REQUIRED DURING CONDUCTED EMISSIONS/VOLTAGE RIPPLE AND POWER QUALITY MEASUREMENTS.	
102-038	PTC	KEPS DKQM	PERFORM POWER QUALITY AND EME MEASUREMENTS FOR NODE2/JEM LOAD CONFIGURATION 1 PER R0031V2 SEQUENCE 105 EPS B-STRING POWER QUALITY AND EME SEQUENCE TASK I. REPORT COMPLETION. START GMT _____:_____:_____ (DAY:HR:MIN) COMPLETE GMT _____:_____:_____ (DAY:HR:MIN)	NV:_____
102-039	KEPS	PTC	OK TO PROCEED WITH SEQUENCE	
102-040	PTC	KTCS	READY TO BEGIN JEM MTL INITIAL ACTIVATION.	

RELEASED - Printed documents may be obsolete; validate prior to use.

SECTION IV - OPERATION INSTRUCTIONS

SEQ/STEP	CMD	RESP	DESCRIPTION	VERIF.

CAUTION

NEVER OPEN TCA-L/M ACCUMULATOR INLET VALVE (SOV, MV, RV) DURING GSE PUMP CIRCULATION TO AVOID HARDWARE DAMAGE.

CONFIGURE MTL RACK

CAUTION

GSE PUMP MUST BE REACTIVATED WITHIN 10 MINUTES AFTER GSE PUMP DEACTIVATION. THE FOLLOWING 3 STEPS ARE TIME CRITICAL AND MUST BE PERFORMED AS QUICKLY AS POSSIBLE TO PREVENT HARDWARE DAMAGE.

102-041	KTCS	TLM	STOP MTL COOLANT FROM RESOURCE SUPPLY EQUIPMENT. REPORT COMPLETE. GMT _____:_____:_____ (DAY:HR:MIN)	
102-042	KTCS	TLM DKQM	PERFORM NASDA PROCEDURE JTP-321015 TO CONNECT MTL TCS RACK TO PM ITCS SYSTEM. REPORT COMPLETE. START GMT _____:_____:_____ (DAY:HR:MIN) COMPLETE GMT _____:_____:_____ (DAY:HR:MIN)	NV:_____
102-043	KTCS	TLM	RESTART MTL COOLANT FROM RESOURCE SUPPLY EQUIPMENT. REPORT COMPLETE. GMT _____:_____:_____ (DAY:HR:MIN)	

RELEASED - Printed documents may be obsolete; validate prior to use.

SECTION IV - OPERATION INSTRUCTIONS

SEQ/STEP	CMD	RESP	DESCRIPTION	VERIF.

VERIFY/POSITION MTL BYPASS VALVE TO "IFHX"

102-044 KTCS MS1

PCS
TASK:JPM CHANNEL B INITIAL ACTIVATION:JPM MTL ACTIVATION
"JPM MTL ACTIVATION"

'MTL IFHX H20 BYPASS VALVE'

1. CMD: PIB B1 120V L SW13 POSN – CLOSE
   PUI: LAPX96IM0417K
   OPS:
   JPM_EPS_PIB_B1_120V_L_SW13_(MTL_IFHX_BYP_VLV_B)_CL_(ACT)

   GMT _____:_____:_____ (HR:MIN:SEC)

2. VERIFY: PIB B1 120VL SW13 POSN - CL
   ENG: PIB_B1 120V_L SW13 POWER STATUS [ACT]
   PUI: JMDC04FCPE2CJ

~OMRSD A3000ME.300-E (PARTIAL EPS CHANNELIZATION – MTL HX BYPASS VALVE)

102-045 KTCS MS1

PCS
TASK:JPM CHANNEL B INITIAL ACTIVATION:JPM MTL ACTIVATION
'JPM MTL ACTIVATION'

'MTL IFHX H2O BYPASS VALVE'

1. CMD: POSN CHECK/SET – START
   PUI: LADD96IM1107K
   OPS:
   JPM_ATCS_MTL_IFHX_BYP_VLV_B_POSN_SET_CMD_START_(ACT)

   GMT _____:_____:_____ (HR:MIN:SEC)

2. RECORD:

   VALVE POSN _____ (BD)
   ENG: MTL_IFHX_BYPASS_VALVE CURRENT POSTN [ACT]
   PUI: JMDC04FCT5F0J

RELEASED - Printed documents may be obsolete; validate prior to use.

SECTION IV - OPERATION INSTRUCTIONS

SEQ/STEP	CMD	RESP	DESCRIPTION	VERIF.
102-046	KTCS	MS1	PCS TASK:JPM CHANNEL B INITIAL ACTIVATION:JPM MTL ACTIVATION 'JPM MTL ACTIVATION' 'MTL IFHX H2O BYPASS VALVE' 1. CMD: POSN CHECK/SET – STOP PUI: LADD96IM1108K OPS: JPM_ATCS_MTL_IFHX_BYP_VLV_B_POSN_SET_CMD_STOP_(ACT) GMT _____:_____:_____ (HR:MIN:SEC) 2. VERIFY VALVE POSN – UNKNOWN ENG: MTL_IFHX_BYPASS_VALVE CURRENT POSTN [ACT] PUI: JMDC04FCT5F0J **NOTE** PERFORM THE FOLLOWING 4 STEPS IF THE VALVE POSITION RECORDED IN THE 2 PREVIOUS STEPS IS NOT "IFHX"	
102-047	KTCS	SSFE	CES MATE LOAD AND RUN MATE SCRIPT MEIT3_MATE_ACT_CMDS INDEX 0X0023 CMD: MTL_IFHX BYP_VALUE-IFHX OPS: JPM_ATCS_MTL_IFHX BYP_VLV_B_POSN_SET_(ACT)_TMPLT PUI: LADD96IM1120K PARAMETER 1: 16#2700# (IF_HX) GMT _____:_____:_____ (HR:MIN:SEC)	

RELEASED - Printed documents may be obsolete; validate prior to use.

SECTION IV - OPERATION INSTRUCTIONS

SEQ/STEP	CMD	RESP	DESCRIPTION	VERIF.
102-048	KTCS	MS1	PCS TASK:JPM CHANNEL B INITIAL ACTIVATION:JPM MTL ACTIVATION 'JPM MTL ACTIVATION' 'MTL IFHX H2O BYPASS VALVE' 1. CMD: POSN CHECK/SET – START PUI: LADD96IM1107K OPS: JPM_ATCS_MTL_IFHX_BYP_VLV_B_POSN_SET_CMD_START_(ACT) GMT _____:_____:_____ (HR:MIN:SEC) 2. VERIFY STATUS: MTL IFHX BYP VALVE POSITION - IFHX ENG: MTL_IFHX_BYPASS_VALVE CURRENT POSTN [ACT] PUI: JMDC04FCT5F0J	
102-049	KTCS	MS1	PCS TASK:1J:JPM CHANNEL B INITIAL ACTIVATION:JPM MTL ACTIVATION 'JPM MTL ACTIVATION' 'MTL IFHX H2O BYPASS VALVE' 1. CMD: POSN CHECK/SET – STOP PUI: LADD96IM1108K OPS: JPM_ATCS_MTL_IFHX_BYP_VLV_B_POSN_SET_CMD_STOP_(ACT) GMT _____:_____:_____ (HR:MIN:SEC) 2. VERIFY VALVE POSN – UNKNOWN ENG: MTL_IFHX_BYPASS_VALVE CURRENT POSTN [ACT] PUI: JMDC04FCT5F0J	

RELEASED - Printed documents may be obsolete; validate prior to use.

SECTION IV - OPERATION INSTRUCTIONS

SEQ/STEP	CMD	RESP	DESCRIPTION	VERIF.
102-050	KTCS	SSFE	CES MATE LOAD AND RUN MATE SCRIPT MEIT3_MATE_ACT_CMDS INDEX: 0X004C CMD: MTL IFHX BYP VALVE – POSITION_CHECK (CLEAR) OPS: JPM_ATCS_MTL_IFHX BYP_VLV_B_POSN_SET_(ACT)_TMPLT PUI: LADD96IM1120K PARAMETER 1: 16#0000# (POSITION_CHECK (CLEAR)) GMT _____:_____:_____ (HR:MIN:SEC)	
				NOT PERFORMED:_____ (PREVIOUS 4 STEPS)

NOTE

THE FOLLOWING STEP DID NOT WORK AT PMIT DUE TO AN INCORRECT COMMAND BUILD IN THE DEC STD OUT. THE COMMAND SHOULD BE FIXED IN THE MAY STD OUT AND FUNCTION PROPERLY FOR MEIT.

102-051	KTCS	MS1	PCS TASK:JPM CHANNEL B INITIAL ACTIVATION:JPM MTL ACTIVATION 'JPM MTL ACTIVATION' 'MTL IFHX H2O BYPASS VALVE' 1. CMD: PIB B1 120V L SW13 POSN – OPEN PUI: LAPX96IM0419K OPS: JPM_EPS_PIB_B1_120V_L_SW13_(MTL_IFHX_BYP_VLV_B)_OP_(ACT) GMT _____:_____:_____ (HR:MIN:SEC) 2. VERIFY PIB B1 120V L SW13 POSN - OP ENG: PIB_B1 120V_L SW13 POWER STATUS [ACT] PUI: JMDC04FCPE2CJ	

RELEASED - Printed documents may be obsolete; validate prior to use.

SECTION IV - OPERATION INSTRUCTIONS

SEQ/STEP	CMD	RESP	DESCRIPTION	VERIF.
			ACTIVATE PDB TCS 2	
102-052	KEPS	MS1	PCS TASK:JPM:CHANNEL B INITIAL ACTIVATION:JPM MTL ACTIVATION 'JPM MTL ACTIVATION' 'PDB TCS2' 1. CMD: PDU B1 RPC10 POSN – CLOSE PUI: LADD96IM1119K OPS: JPM_EPS_PDU_B1_RPC10_(PDB_B_TCS2)_CL_(ACT) EXECUTE GMT _____:_____:_____ (HR:MIN:SEC) 2. VERIFY: PDU_B1_RPC10 POSN - CL PUI: JMDC04FCPI0SJ ENG: SYS_PDU_B RPC10 POWER STATUS [ACT] ~OMRSD A3000ME.300-A (PARTIAL EPS CHANNELIZATION – PDB TCS2)	

RELEASED - Printed documents may be obsolete; validate prior to use.

SECTION IV - OPERATION INSTRUCTIONS

SEQ/STEP	CMD	RESP	DESCRIPTION	VERIF.
102-053	KCDH KEPS	MS1	PCS TASK:JPM CHANNEL B INITIAL ACTIVATION:JPM MTL ACTIVATION 'PDB TCS2' 1. CMD: DIU EPS 2 /PDB TCS 2 COMM – START PUI: LADD96IM1098K OPS: JPM_CDH_DIU_B4/PDB_B_TCS2_(RS422_CH2)_COMM_START_(ACT) GMT _____:_____:_____ (HR:MIN:SEC) VERIFY: 2. DATA FRAME COUNTER – "INCREMENTING" ENG: PDB_TCS2 DATA FRAME TIME TAG PUI: JMDC04FC0051W 3. HEALTH STATUS SUMMARY – NORMAL ENG: PDB_TCS2 HEALTH STATUS SUMMARY [ACT] PUI: JMDC04FCPA00J	
102-054	KEPS		TCMS PRE-JCP:SLB1_B 'JPM EPS SYS LOC BUS1:AV STR B' 'PDB TCS2' RECORD: 1. PDB_TCS2 INPUT VOLTAGE _____ (BD) PUI: JMDC04FCPA10V ENG: PDB_TCS2 INPUT VOLTAGE [ACT]	

RELEASED - Printed documents may be obsolete; validate prior to use.

SECTION IV - OPERATION INSTRUCTIONS

SEQ/STEP	CMD	RESP	DESCRIPTION	VERIF.
			APPLY POWER TO PUMP	
102-055	KTCS	MS1	PCS TASK:JPM CHANNEL B INITIAL ACTIVATION:JPM MTL ACTIVATION 'JPM MTL ACTIVATION' 'TCA M' 1. CMD: PDB TCS2 RPC4 (PUMP INV) POSN – CLOSE PUI: LAPX96IM0404K OPS: JPM_EPS_PDB_B_TCS2_RPC04_(TCA_M_PUMP_B_INV)_CL_(ACT) GMT _____:_____:_____ (HR:MIN:SEC) 2. VERIFY: PDB TCS2 RPC4 (PUMP INV) POSN – CL ENG: PDB_TCS2 RPC4 POWER STATUS [ACT] PUI: JMDC04FCPA0FJ ~OMRSD A3000ME.300-C (PARTIAL EPS CHANNELIZATION – TCA M PUMP)	

RELEASED - Printed documents may be obsolete; validate prior to use.

SECTION IV - OPERATION INSTRUCTIONS

SEQ/STEP	CMD	RESP	DESCRIPTION	VERIF.
			ACTIVATE TCA_M GASTRAP VALVE	
102-056	KTCS	MS1	PCS TASK:JPM CHANNEL B INITIAL ACTIVATION:JPM MTL ACTIVATION 'JPM MTL ACTIVATION' 'TCA M' 1. CMD: PDB TCS2 RPC8 (GAS TRAP BYP VLV) POSN – CLOSE PUI: LAPX96IM0408K OPS: JPM_EPS_PDB_B_TCS2_RPC08_ (TCAMGASTRAPBYPVLVB)_CL_(ACT) GMT _____:_____:_____ (HR:MIN:SEC) 2. VERIFY: PDB TCS2 RPC8 (GAS TRAP BYP VLV) POSN – CL ENG: PDB_TCS2 RPC8 POWER STATUS [ACT] PUI: JMDC04FCPA0JJ	
			ACTIVATE TCA_M MTL TEMP CONTROL VALVE	
102-057	KTCS	MS1	PCS TASK:JPM CHANNEL B INITIAL ACTIVATION:JPM MTL ACTIVATION 'JPM MTL ACTIVATION' 'MTL TCV B' 1. CMD PIB B1 120V L SW 3 POSN – CLOSE PUI: LAPX96IM0418K OPS: JPM_EPS_PIB_B1_120V_L_SW03_(TCA_M_MTL_TWM V_B)_CL_(ACT) GMT _____:_____:_____ (HR:MIN:SEC) 2. VERIFY: PIB B1 120V L SW 3 POSN – CL ENG: PIB_B1 120V_L SW3 POWER STATUS [ACT] PUI: JMDC04FCPE22J ~OMRSD A3000ME.300-E (PARTIAL EPS CHANNELIZATION – TCA M MTL TEMP CNTRL VLV)	

RELEASED - Printed documents may be obsolete; validate prior to use.

SECTION IV - OPERATION INSTRUCTIONS

SEQ/STEP	CMD	RESP	DESCRIPTION	VERIF.
			NOTE TAC-M MAY TAKE UP TO 2 MINUTES FOR BIT.	
			ACTIVATE TCA M TAC	
102-058	KTCS	MS1	PCS TASK:JPM CHANNEL B INITIAL ACTIVATION:JPM MTL ACTIVATION 'JPM MTL ACTIVATION' 'TCA M TAC' 1. CMD: PDB TCS 2 RPC 2 POSN – CLOSE PUI: LAPX96IM0406K OPS: JPM_EPS_PDB_B_TCS2_RPC02_(TCA_M_TAC_B)_CL_(ACT) GMT _____:_____:_____ (HR:MIN:SEC) 2. VERIFY: PDB TCS 2 RPC 2 POSN – CL ENG: PDB_TCS2 RPC2 POWER STATUS [ACT] PUI: JMDC04FCPA0DJ ~OMRSD A3000ME.300-C (PARTIAL EPS CHANNELIZATION – TCA M TAC)	

RELEASED - Printed documents may be obsolete; validate prior to use.

SECTION IV - OPERATION INSTRUCTIONS

SEQ/STEP	CMD	RESP	DESCRIPTION	VERIF.

ENABLE COMM BETWEEN DIU EPS 2 AND TCA_M

NOTE:

DATA FRAME COUNTER WILL INCREMENT AFTER TAC POWER ON BIT IS COMPLETED (MAY TAKE UP TO 2 MINUTES).

NOTE:

EPS_DIU HEALTH STATUS SUMMARY MAY INDICATE “ERROR” AND EPS2_DIU RS422 PORT 6 SMPL ERROR MAY INDICATE “ABNORMAL” WHEN THE FOLLOWING STEP IS PERFORMED BEFORE TAC-M BIT FINISHES BECAUSE THE COMMUNICATION BETWEEN JCP AND TAC-M CAN NOT BE ESTABLISHED DURING TAC-M BIT.

NOTE:

TCA_M HEALTH STATUS SUMMARY MAY INDICATE “ERROR” AND TCA_M MTL CNTRL TEMP STATUS MAY INDICATE “ABNORMAL” IF COOLANT TEMPERATURE IS OUT OF NORMAL RANGE (13 – 22 DEG C). THESE TELEMETRY ITEMS WILL NOT BE VISIBLE ON PCS AND ARE FOR REFERENCE ONLY.

102-059 KTCS MS1 PCS
TASK:JPM CHANNEL B INITIAL ACTIVATION:JPM MTL ACTIVATION
‘JPM MTL ACTIVATION’

‘TCA M TAC’

1. CMD: DIU EPS-2/TCA M TAC COMM – START
   PUI: LADD96IM1110K
   OPS:
   JPM_CDH_DIU_B4/TCA_M_TAC_B_(RS422_CH6)_COMM_START_(ACT)

   GMT _____:_____:_____ (HR:MIN:SEC)

VERIFY:

2. DATA FRAME COUNTER – “INCREMENTING”
   ENG: TCA_M DATA FRAME TIME TAG
   PUI: JMDC04FC0091W

3. PWR ON BIT RESULT – NORMAL
   ENG: TCA_M TAC POWER ON BIT RESULT [ACT]
   PUI: JMDC04FCTC0LJ

RELEASED - Printed documents may be obsolete; validate prior to use.

SECTION IV - OPERATION INSTRUCTIONS

SEQ/STEP	CMD	RESP	DESCRIPTION	VERIF.
			4. HEALTH STATUS – NORMAL ENG: TCA_M TAC HEALTH STATUS [ACT] PUI: JMDC04FCTC0CJ	
			5. TEMP STATUS - NORMAL ENG: TCA_M TAC TEMP STATUS [ACT] PUI: JMDC04FCTC0ZJ	
102-060	KTCS		TCMS	
			RECORD HEALTH STATUS SUMMARY – _____ (BD) ENG: TCA_M HEALTH STATUS SUMMARY [ACT] PUI: JMDC04FCTC06J	
102-061	KTCS	MS1	PCS TASK:JPM CHANNEL B INITIAL ACTIVATION:JPM MTL ACTIVATION ‘JPM MTL ACTIVATION’	
			‘TCA M PUMP’	
			VERIFY:	
			1. TEMP STATUS – NORMAL ENG: TCA_M PUMP INVERTER TEMP STATUS [ACT] PUI: JMDC04FCTC10J	
			2. HEALTH STATUS – NORMAL ENG: TCA_M PUMP HEALTH STATUS [ACT] PUI: JMDC04FCTC0DJ	

RELEASED - Printed documents may be obsolete; validate prior to use.

SECTION IV - OPERATION INSTRUCTIONS

SEQ/STEP	CMD	RESP	DESCRIPTION	VERIF.

102-062 KTCS MS1 PCS
TASK:JPM CHANNEL B INITIAL ACTIVATION:JPM MTL ACTIVATION
'JPM MTL ACTIVATION'

'TCA_M ACCUMULATOR TELEMETRY'

RECORD AND VERIFY THE FOLLOWING PARAMETERS:

NOMENCLATURE	ACTUAL VALUE	EXPECTED VALUE	PUI
ACCUM WATER VOL 1		0.66-4.7 L	JMDC04FCTC02Q
ACCUM WATER VOL 2		0.66-4.7 L	JMDC04FCTC03Q
ACCUM WATER PRESS 1		<282 KPA	JMDC04FCTC00P
ACCUM WATER PRESS 2		<282 KPA	JMDC04FCTC01P

102-063 KTCS TLM CONFIRM THE ABOVE ACCUMULATOR VALUES ARE AS EXPECTED PER PRE-MEIT JEM ACCUMULATOR HISTORY. OK TO PROCEED.

RELEASED - Printed documents may be obsolete; validate prior to use.

SECTION IV - OPERATION INSTRUCTIONS

SEQ/STEP	CMD	RESP	DESCRIPTION	VERIF.

VERIFY TCA_M GAS TRAP VALVE POSITION

NOTE

THIS STEP IS FOR GROUND TEST ONLY

102-064 KTCS MS1 PCS
TASK:JPM CHANNEL B INITIAL ACTIVATION:JPM MTL ACTIVATION
'JPM MTL ACTIVATION'

'TCA M GAS TRAP BYPASS VALVE'

VERIFY:

1. VALVE POSN – BYPASS
   PUI: JMDC04FCTC1PJ
   ENG: GP_M_GAS_TRAP_VALVE POSTN [ACT]

'TCA M'

2. CMD: PDB TCS2 RPC8 (GAS TRAP BYP VLV)
   POSN – OPEN
   PUI: LAPX96IM0409K
   OPS:
   JPM_EPS_PDB_B_TCS2_RPC08_(GAS_TRAP_BYP VLV)_OP_(ACT)

   GMT _____:_____:_____ (HR:MIN:SEC)

3. VERIFY: PDB TCS2 RPC8 (GAS TRAP BYP VLV) POSN – OP
   PUI: JMDC04FCPA0JJ
   ENG: PDB_TCS2 RPC8 POWER STATUS [ACT]

RELEASED - Printed documents may be obsolete; validate prior to use.

SECTION IV - OPERATION INSTRUCTIONS

SEQ/STEP	CMD	RESP	DESCRIPTION	VERIF.

NOTE

DUE TO THE TIME CONSTRAINT IN THE FOLLOWING STEPS A SECOND PCS WILL BE SHADOWING THE DISPLAY NAVIGATION FOR A SECONDARY COMMAND AND TELEMETRY SOURCE.

NOTE

ALL PERSONNEL BE FAMILIAR WITH THE FOLLOWING STEPS, NOTES AND CAUTIONS IN THE TIME CRITICAL WINDOW. BE AWARE OF THE NESTED TIME CRITICAL CAUTIONS AND TIME CONSTRAINTS.

CAUTION

TCA M PUMP MUST ACTIVATE WITHIN 10 MINUTES AFTER GSE PUMP DEACTIVATION. THE FOLLOWING 11 STEPS ARE TIME CRITICAL AND MUST BE PERFORMED AS QUICKLY AS POSSIBLE TO PREVENT HARDWARE DAMAGE. APPENDIX N WILL BE PERFORMED TO REACTIVATE GSE COOLING AT *NTC DIRECTION IF THE END OF THE TIME CRITICAL PERIOD IS APPROACHING AND THE FLIGHT PUMP IS NOT ACTIVATED.

RECONFIGURE GSE FOR FLIGHT COOLING

RECONFIGURE GSE LOOP - JEM B STRING ACTIVATION (JCP-B PRIMARY)

102-065 KTCS TLM STOP MTL COOLANT FROM RESOURCE SUPPLY EQUIPMENT. REPORT COMPLETE.

GMT _____:_____:_____ (DAY:HR:MIN)

102-066 KTCS TLM RECONFIGURE MTL COOLING GSE FROM GSE PUMP MODE TO FLIGHT PUMP MODE AS FOLLOWS:

1. DISCONNECT QD A/B COUPLING PER FIGURE 1.
2. DISCONNECT QD C/D COUPLING PER FIGURE 1.
3. CONNECT QD B/C COUPLING PER FIGURE 1.
4. REPORT COMPLETE

RELEASED - Printed documents may be obsolete; validate prior to use.

SECTION IV - OPERATION INSTRUCTIONS

SEQ/STEP	CMD	RESP	DESCRIPTION	VERIF.
102-067	KTCS	TLM	MANUALLY POSITION TCA_L MTL THERMAL CONTROL VALVE POSITON TO PORT A(BYPASS). REPORT COMPLETE.	

TAG NO.	NOMENCLATURE	POSITION
MV1152	TCA_L MTL THERMAL CONTROL VALVE	PORT A (BYPASS)

102-068 KTCS TLM ADJUST SYSTEM PRESSURE IN TCS RESOURCE SUPPLY UNIT TO <282 KPA. REPORT COMPLETE

CAUTION

ACCUMULATOR SOV SHOULD NOT BE ACTIVE FOR MORE THAN 5 MINUTES WITHOUT COOLING. THE FOLLOWING 6 STEPS ARE TIME CRITICAL AND MUST BE PERFORMED AS QUICKLY AS POSSIBLE TO AVOID HARDWARE DAMAGE. APPENDIX N WILL BE PERFORMED TO REACTIVATE GSE COOLING AT *NTC DIRECTION IF THE END OF THE TIME CRITICAL PERIOD IS APPROACHING AND THE FLIGHT PUMP IS NOT ACTIVATED.

CONFIGURE ACCUMULATOR SOV

102-069 KTCS MS1 PCS
TASK:JPM CHANNEL B INITIAL ACTIVATION:JPM MTL ACTIVATION
'JPM MTL ACTIVATION'

'TCA M ACCUMULATOR'

1. CMD: INLET VALVE POSN - OPEN
   PUI: LATX96IM0147K
   OPS: JPM_ATCS_TCA_M_ACCUM_SOV_B_OP_(ACT)

   GMT _____:_____:_____ (HR:MIN:SEC)

2. VERIFY: INLET VALVE POSN – OPEN
   PUI: JMDC04FCTC04J
   ENG: TCA_M ACCUMULATOR INLET VALVE POSTN [ACT]

RELEASED - Printed documents may be obsolete; validate prior to use.

SECTION IV - OPERATION INSTRUCTIONS

SEQ/STEP	CMD	RESP	DESCRIPTION	VERIF.

VERIFY CRITICAL STARTUP PARAMETERS

102-070 KTCS TCMS

RECORD AND VERIFY THE FOLLOWING PARAMETERS:

NOMENCLATURE	ACTUAL VALUE	EXPECTED VALUE	PUI
WATER VOL 1		0.66-4.7 L	JMDC04FCTC02Q
WATER VOL 2		0.66-4.7 L	JMDC04FCTC03Q
WATER PRESS 1		<282 KPA	JMDC04FCTC00P
WATER PRESS 2		<282 KPA	JMDC04FCTC01P

START TCA_M PRESS CONTROL

102-071 KTCS SSFE LOAD AND RUN MATE SCRIPT
MEIT3_MATE_ACT_CMDS
INDEX: 0X0035

CMD: TCA_M_PRESS_CNTRL – START
PUI: LATX96IM0151K
OPS:
JPM_ATCS_TCA_M_PUMP_B_IN_PRESS_CNTL_START_(ACT)

GMT _____:_____:_____ (HR:MIN:SEC)

102-072 KTCS TCMS
VERIFY: TCA_M MTL PRESS CNTRL EXECUTING STATUS
[ACT] – EXECUTING
PUI: JMDC04FCTC0KJ

RELEASED - Printed documents may be obsolete; validate prior to use.

SECTION IV - OPERATION INSTRUCTIONS

SEQ/STEP	CMD	RESP	DESCRIPTION	VERIF.

VERIFY CRITICAL STARTUP PARAMETERS

102-073 KTCS TCMS

RECORD AND VERIFY THE FOLLOWING PARAMETERS:

NOMENCLATURE	ACTUAL VALUE	EXPECTED VALUE	PUI
WATER VOL 1		0.66-4.7 L	JMDC04FCTC02Q
WATER VOL 2		0.66-4.7 L	JMDC04FCTC03Q
WATER PRESS 1		134-282.1 KPA	JMDC04FCTC00P
WATER PRESS 2		106.9-282.1 KPA	JMDC04FCTC01P

ACTIVATE TCA M PUMP

102-074 KTCS MS1 PCS
TASK:JPM CHANNEL B INITIAL ACTIVATION:JPM MTL ACTIVATION
'JPM MTL ACTIVATION'

'TCA M PUMP'

CMD: OPERATION – START
PUI: LATX96IM0143K
OPS: JPM_ATCS_TCA_M_PUMP_B_START_(ACT)

GMT _____:_____:_____ (HR:MIN:SEC)

RELEASED - Printed documents may be obsolete; validate prior to use.

SECTION IV - OPERATION INSTRUCTIONS

SEQ/STEP	CMD	RESP	DESCRIPTION	VERIF.

NOTE

TCA_M HEALTH STATUS SUMMARY MAY INDICATE "ERROR" AND TCA_M MTL MIN PRESS STATUS MAY INDICATE "ABNORMAL" FOR PUMP ACTIVATION (MOMENTARILY). THESE TELEMETRY ITEMS WILL NOT BE VISIBLE ON PCS AND ARE FOR REFERENCE ONLY.

102-075 KTCS MS1 PCS
TASK:JPM CHANNEL B INITIAL ACTIVATION:JPM MTL ACTIVATION
'JPM MTL ACTIVATION'

'TCA M PUMP'

VERIFY:

1. OPERATION – OPERATING
   PUI: JMDC04FCTC0HJ
   ENG: TCA_M MTL EXECUTING STATUS [ACT]

2. VERIFY SPEED - INCREASING
   PUI: JMDC04FCTC1OR
   ENG: TCA_M PUMP REV [ACT]

3. WAIT ~1 MINUTE FOR STABILIZATION

4. VERIFY TEMP STATUS – NORMAL
   PUI: JMDC04FCTC10J
   ENG: TCA_M PUMP INVERTER TEMP STATUS [ACT]

5. HEALTH STATUS - NORMAL
   PUI: JMDC04FCTC0DJ
   ENG: TCA_M PUMP HEALTH STATUS [ACT]

6. VERIFY SPEED – 6430 +/- 329 RPM
   PUI: JMDC04FCTC1OR
   ENG: TCA_M PUMP REV [ACT]

RELEASED - Printed documents may be obsolete; validate prior to use.

SECTION IV - OPERATION INSTRUCTIONS

SEQ/STEP	CMD	RESP	DESCRIPTION	VERIF.
			NOTE ACTIVATION OF THE TCA M PUMP IN THE PREVIOUS STEP ENDED THE TIME CRITICAL WINDOW. **NOTE:** THE FOLLOWING STEP WILL BE PERFORMED PER *NTC DIRECTION IF THE END OF THE TIME CRITICAL WINDOW IS APPROACHING AND THE FLIGHT PUMP HAS NOT BEEN ACTIVATED.	
102-076	*NTC	KTCS	PERFORM APPENDIX N TO DEACTIVATE MTL AND REACTIVATE GROUND COOLING. REPORT TIME COOLING IS RESTABLISHED: GMT _____:_____:_____ (DAY:HR:MIN) NOT PERFORMED:_____	
102-077	KTCS	MS1	PCS TASK:JPM CHANNEL B INITIAL ACTIVATION:JPM MTL ACTIVATION 'JPM MTL ACTIVATION' 'TCA M PUMP' 1. ENTER SPEED SET - 4850 RPM 2. CMD: SPEED SET – SET PUI: LATX96IM0159K OPS: JPM_ATCS_TCA_M_PUMP_B_SPD_SET_(ACT)_TMPLT GMT _____:_____:_____ (HR:MIN:SEC) 3. WAIT ~1 MINUTE FOR STABILIZATION 4. VERIFY: SPEED – 4850 +/-329 RPM PUI: JMDC04FCTC1OR ENG: TCA_M PUMP REV [ACT]	
102-078	KTCS		TCMS RECORD HEALTH STATUS SUMMARY – _____ (BD) ENG: TCA_M HEALTH STATUS SUMMARY [ACT] PUI: JMDC04FCTC06J	

RELEASED - Printed documents may be obsolete; validate prior to use.

SECTION IV - OPERATION INSTRUCTIONS

SEQ/STEP	CMD	RESP	DESCRIPTION	VERIF.
102-079	KTCS	MS1	PCS TASK:JPM CHANNEL B INITIAL ACTIVATION:JPM MTL ACTIVATION 'JPM MTL ACTIVATION' 'TCA M PUMP' VERIFY: HEALTH STATUS – NORMAL ENG: TCA_M PUMP HEALTH STATUS [ACT] PUI: JMDC04FCTC0DJ	
102-080	KTCS	MS1	PCS TASK:JPM CHANNEL B INITIAL ACTIVATION:JPM MTL ACTIVATION 'JPM MTL ACTIVATION' 'MTL TEMP' VERIFY MTL TEMP LWR LIMIT SETPOINT -_____ (13.0 DEG C) OPS: TCA_M MTL_TEMP_LOWER_LIMIT_VALUE [ACT] PUI: JMDC04FCTC17T	

RELEASED - Printed documents may be obsolete; validate prior to use.

SECTION IV - OPERATION INSTRUCTIONS

SEQ/STEP	CMD	RESP	DESCRIPTION	VERIF.

NOTE

THE FOLLOWING COMMAND WAS SENT VIA MATE DURING PMIT. SHOULD BE FIXED IN EC-2 RELEASE OF PCS FOR MEIT.

NOTE

TELEMETRY IN SUBSTEP 3 IS AFFECTED BY PCS ROUNDOFF ERRORS. SHOULD SHOW 12.9, BUT MAY SHOW 13.0. TCMS VERIFICATION SHOULD SHOW CORRECT VALUE.

102-081 KTCS MS1 PCS
TASK:JPM CHANNEL B INITIAL ACTIVATION:JPM MTL ACTIVATION
'JPM MTL ACTIVATION'

'MTL TEMP'

1. CMD: MTL TEMP CNTL PARAM- SET
PUI: LATX96IM0186K

OPS:
JPM_ATCS_TCA_M_MTL_TWMV_B_TEMP_CNTL_PARAM_SET_(ACT)_TMPLT
PARAMETER 1: 00H (HALF OF DEADBAND (THB))
PARAMETER 2: 40H (HALF OF PROPORTIONAL BAND (TPB))
PARAMETER 3: 31H (EXPONENT FOR FLOATING CONTROLLER ACTION (X))
PARAMETER 4: 64H (REFERENCE TEMPERATURE (TSET))
PARAMETER 5: 7FH (VALVE MAX SPEED)
PARAMETER 6: 32H (VALVE MIN SPEED)
PARAMETER 7: 28H (DERIVATIVE GAIN)
PARAMETER 8: 3CH (TEMPERATURE UPPER LIMIT)
PARAMETER 9: 95H (TEMPERATURE LOWER LIMIT)
PARAMETER 10: 1EH (MARGIN BETWEEN TEMPERATURE SENSORS)
PARAMETER 11: 64H (TEMPERATURE SENSOR ELECTRICAL RESISTANCE CHARACTERISTICS A)
PARAMETER 12: 78H (TEMPERATURE SENSOR ELECTRICAL RESISTANCE CHARACTERISTICS B)

GMT _____:_____:_____ (HR:MIN:SEC)

RELEASED - Printed documents may be obsolete; validate prior to use.

SECTION IV - OPERATION INSTRUCTIONS

SEQ/STEP	CMD	RESP	DESCRIPTION	VERIF.
			2. VERIFY MTL TEMP SNSR HEALTH STATUS - NORMAL PUI: JMDC04FCTC0GJ ENG: TCA_M MTL CNTRL TEMP SENSOR HEALTH STATUS [ACT]	
			3. TCA_M MTL_TEMP_LOWER_LIMIT_VALUE [ACT] _____ (12.9 +/- 0.1 C) PUI: JMDC04FCTC17T	
102-082	KTCS		TCMS	
			VERIFY/RECORD:	
			1. TCA_M MTL_TEMP_CNTRL_TARGET_VALUE [ACT] _____ (17.2 C) PUI: JMDC04FCTC15T	
			2. TCA_M MTL_TEMP_UPPER_LIMIT_VALUE [ACT] _____ (22.0 C) PUI: JMDC04FCTC16T	
			3. TCA_M MTL_TEMP_LOWER_LIMIT_VALUE [ACT] _____ (12.9) PUI: JMDC04FCTC17T	
			4. TCA_M MTL_TEMP_SENSOR_DIFFERENCE_LIMIT_ VALUE [ACT] _____ (3.0 C) PUI: JMDC04FCTC18T	

RELEASED - Printed documents may be obsolete; validate prior to use.

SECTION IV - OPERATION INSTRUCTIONS

SEQ/STEP	CMD	RESP	DESCRIPTION	VERIF.
			START TEMPERATURE CONTROL	
102-083	KTCS	MS1	PCS TASK:JPM CHANNEL B INITIAL ACTIVATION JPM MTL ACTIVATION 'JPM MTL ACTIVATION' 'MTL TEMP' 1. CMD: MTL TEMP CNTL – START PUI: LATX96IM0145K GMT _____:_____:_____ (HR:MIN:SEC) 2. VERIFY CNTL STATE – OPERATING ENG: TCA_M MTL TEMP CNTRL EXECUTING STATUS [ACT] PUI: JMDC04FCTC0IJ ~OMRSD A3000MI.100-A (TCS 2)	

RELEASED - Printed documents may be obsolete; validate prior to use.

SECTION IV - OPERATION INSTRUCTIONS

SEQ/STEP CMD RESP DESCRIPTION VERIF.

NOTE

ALLOW SYSTEM APPROXIMATELY 10 MINUTES TO THERMALLY STABILIZE PRIOR TO PROCEEDING.

POST ACTIVATION VERIFICATIONS

NOTE

IN THE FOLLOWING STEP, PUMP DIFF PRESS AND TOTAL FLOW SHALL BE VERIFIED BY KTCS AND NASDA ACCORDING TO APPENDIX M FIGURE M-1 (TCA-M) IN APPENDIX M.

102-084 KTCS MS1 PCS
TASK:JPM CHANNEL B INITIAL ACTIVATION:JPM MTL ACTIVATION
“JPM MTL ACTIVATION”

‘TCA M TELEMETRY SECTION’

RECORD/VERIFY THE FOLLOWING POST ACTIVATION PARAMETERS:

NOMENCLATURE	ACTUAL VALUE	EXPECTED VALUE	PUI
WATER VOL 1		0.66-4.7 L	JMDC04FCTC02Q
WATER VOL 2		0.66-4.7 L	JMDC04FCTC03Q
WATER PRESS 1		134-282.1KPA	JMDC04FCTC00P
WATER PRESS 2		106.9-282.1KPA	JMDC04FCTC01P
PUMP DELTA PRESS		IN OPERATIONAL RANGE (REF FIG M-1)	JMDC04FCTC1NP
PUMP OUT FLOW RATE		IN OPERATIONAL RANGE (REF FIG M-1)	JMDC04FCTC0VR

102-085 KTCS MS1 PCS
TASK:JPM CHANNEL B INITIAL ACTIVATION:JPM MTL ACTIVATION
‘JPM MTL ACTIVATION’

‘MTL TCV B TELEMETRY’

VERIFY MTL TEMP: _____ (13-22 C)
ENG: TCA_M MTL CNTRL TEMP [ACT]
PUI: JMDC04FCTC0UT

RELEASED - Printed documents may be obsolete; validate prior to use.

SECTION IV - OPERATION INSTRUCTIONS

SEQ/STEP	CMD	RESP	DESCRIPTION	VERIF.
102-086	KTCS		TCMS RECORD/VERIFY MTL CNTRL TEMP STATUS:_____(NORMAL) ENG: TCA_M MTL CNTRL TEMP STATUS [ACT] PUI: JMDC04FCTC0BJ	
102-087	KTCS	MS1	PCS TASK:JPM CHANNEL B INITIAL ACTIVATION:JPM MTL ACTIVATION ‘JPM MTL ACTIVATION’ ‘TCA M TAC’ 1. VERIFY HEALTH STATUS - NORMAL PUI: JMDC04FCTC0CJ ENG: TCA_M TAC HEALTH STATUS [ACT] ‘TCA M PUMP’ 2. VERIFY HEALTH STATUS - NORMAL PUI: JMDC04FCTC0DJ ENG: TCA_M PUMP HEALTH STATUS [ACT]	
102-088	KTCS		TCMS VERIFY: 1. FILTER DELTA PRESS -< 14.7 KPAD PUI: JMDC04FCTC05P ENG: TCA_M FILTER DIFF PRESS [ACT] 2. ACCUMULATOR HEALTH STATUS - NORMAL PUI: JMDC04FCTC0EJ ENG: TCA_M ACCUMULATOR HEALTH STATUS [ACT]	

RELEASED - Printed documents may be obsolete; validate prior to use.

SECTION IV - OPERATION INSTRUCTIONS

SEQ/STEP	CMD	RESP	DESCRIPTION	VERIF.
			VERIFYING JPM INTERNAL TEMP	
102-089	KTCS	MS1	PCS TASK:1J:JPM CHANNEL B INITIAL ACTIVATION 'JPM CHANNEL B INITIAL ACTIVATION' 'JCP B TEMPERATURES' RECORD/VERIFY: 1. MPC/BIC TEMP 1:_____ (<30 DEGREE C) PUI: JMDC04FCZB00T ENG: JCP_B MPC/BIC1 TEMP [ACT] 2. MPC/BIC TEMP 2:_____ (<30 DEGREE C) ENG: JCP_B MPC/BIC2 TEMP [ACT] PUI: JMDC04FCZB01T	
102-090	KTCS	PTC	JEM MTL INITIAL ACTIVATION COMPLETE. GMT _____:_____:_____ (DAY:HR:MIN)	

RELEASED - Printed documents may be obsolete; validate prior to use.

SECTION IV - OPERATION INSTRUCTIONS

SEQ/STEP	CMD	RESP	DESCRIPTION	VERIF.

JCP-B ACTIVATION

CAUTION

THE JCP CANNOT BE POWERED ON IF THE TEMPERATURES ARE ABOVE 30 DEG C.

ENABLE COMM BETWEEN JCP B AND C&C MDM

102-091 KCDH MS1

PCS
TASK:JPM CHANNEL B INITIAL ACTIVATION:FAS MESSAGE

'JPM CHANNEL B INITIAL ACTIVATION'

OPEN FAS MESSAGE PAGE

NOTE

A COMM ERROR C&W MESSAGE IS EXPECTED AFTER THE NEXT STEP IS PERFORMED SINCE THE JCP-B IS NOT ACTIVATED. THE MESSAGE "CDH PRIMARY JEM CONTROL PROCESSOR FAIL – JEM" WILL OCCUR.

102-092 KCDH MS1

PCS
TASK:JPM CHANNEL B INITIAL ACTIVATION
'JCP B'

1. CMD: RT I/O - ENABLE
   PUI: LADD96IM1018K
   OPS: PRIM_CCS_ENA_RT_TMPLT

   GMT _____:_____:_____ (HR:MIN:SEC)

2. VERIFY:
   RT I/O – ENA
   OPS: PRIM_CCS_CB_EXT_2_RT_ENA_JCP_2_RT_19
   PUI: LADP01MDAVUKJ

~OMRSD A3000MI.100-A (PARTIAL CDH JCP B)

RELEASED - Printed documents may be obsolete; validate prior to use.

SECTION IV - OPERATION INSTRUCTIONS

SEQ/STEP	CMD	RESP	DESCRIPTION	VERIF.
			ACTIVATE PDB DMS2	
			NOTE AFTER ACTIVATION OF PDB DMS2, JCP B ACTIVATES AUTOMATICALLY	
102-093	KEPS	MS1	PCS TASK:JPM CHANNEL B INITIAL ACTIVATION 'JPM CHANNEL B INITIAL ACTIVATION' 'PDB DMS 2' 1. CMD: PDU B1 RPC 3 POSN – CLOSE PUI: LADD96IM1118K OPS: JPM_EPS_PDU_B1_RPC03_(PDB_B_DMS2)_CL_(ACT) EXECUTE GMT _____:_____:_____ (HR:MIN:SEC) 2. VERIFY: PDU B1 RPC 3 POSN- CL PUI: JMDC04FCPI0LJ ENG: SYS_PDU_B RPC3 POWER STATUS [ACT] ~OMRSD A3000ME.300-A (PARTIAL EPS CHANNELIZATION – PDB DMS2)	

RELEASED - Printed documents may be obsolete; validate prior to use.

SECTION IV - OPERATION INSTRUCTIONS

SEQ/STEP	CMD	RESP	DESCRIPTION	VERIF.

NOTE

JCP B TAKES BETWEEN 5.5 AND 10 MINUTES TO INITIALIZE DEPENDING ON FILE CONFIGURATION. STEPS TO ESTABLISH COMMUNICATION BETWEEN C&C MDM AND JCP B CAN BE PERFORMED IMMEDIATELY AFTER VERIFICATION OF THE FOLLOWING STEP.

NOTE

AFTER JCP-B INT PWR SWITCH IS CLOSED, THE JCP B INITIATES A SELF TEST (BIT) WHICH TAKES APPROXIMATELY 60 SECONDS TO COMPLETE. DURING THE BIT , THE JCP B FATAL ERR WILL INDICATE “YES” . AFTER THE BIT IS COMPLETE, THE FATAL ERROR WILL RETURN TO “NO” DEPENDING ON TIMING OF THE RT I/O ENABLE COMMAND BETWEEN THE C&C AND JCP THIS FATAL ERROR MAY BE MONITORED.

VERIFY JCP B STATUS

102-094 KCDH MS1 PCS
JPM CHANNEL B INITIAL ACTIVATION

‘JCP B’

VERIFY:

1. INT PWR SW POSN - CL
   ENG: JCP_B SECONDARY POWER STATUS[ACT]
   PUI: JMDC04FCZB04J

2. FATAL ERR - NO
   ENG: JCP_B FAULT SIGNAL[ACT]
   PUI: JMDC04FCZB03J

~OMRSD A3000MI.100-A (PARTIAL CDH JCP B)

RELEASED - Printed documents may be obsolete; validate prior to use.

SECTION IV - OPERATION INSTRUCTIONS

SEQ/STEP	CMD	RESP	DESCRIPTION	VERIF.
			CHECKOUT JCP B	
			NOTE: IT MAY TAKE UP TO 10 MINUTES TO PERFORM THE VERIFICATIONS IN THE FOLLOWING STEP.	
102-095	KCDH	MS1	PCS TASK:JPM CHANNEL B INITIAL ACTIVATION: 'JCP B' VERIFY: FRAME COUNT - INCREMENTING ENG: FRAME COUNTER PUI:JSDC00SWZ999U ~OMRSD A3000MI.100-A (PARTIAL CDH JCP B)	
			NOTE: FAS MESSAGE SERVICE TAKES A FEW MINUTES TO COMPLETE.	
102-096	KCDH	MS1	PCS TASK:JPM CHANNEL B INITIAL ACTIVATION:FAS MESSAGE VERIFY: 1. FAS SERVICE STARTED ENG: MESSAGE ID BOX 1(TO SS_PCS) 1 PUI: JSDC00SWZ621J 2. JCP FAS MSG – FINISHED FAS0113 (SYSTEM SETUP SEQUENCE IN JCP ACTIVATION) ENG: MESSAGE ID BOX 1(TO SS_PCS) 1 PUI: JSDC00SWZ621J ~OMRSD A3000MI.100-A (PARTIAL CDH JCP B)	

RELEASED - Printed documents may be obsolete; validate prior to use.

SECTION IV - OPERATION INSTRUCTIONS

SEQ/STEP	CMD	RESP	DESCRIPTION	VERIF.
102-097	KCDH	MS1	PCS VERIF: NO JEM C&W ALARMS.	
			ENABLE BUS FDIR BETWEEN C&C MDM AND JCP B	
102-098	KCDH	MS1	PCS JPM CHANNEL B INITIAL ACTIVATION 'JCP B' 1. CMD: RT-FDIR – ENABLE PUI: LADD96IM0769K OPS: PRIM_CCS_ENA_RT_FDIR_TMPL GMT _____:_____:_____ (HR:MIN:SEC) 2. VERIFY: RT-FDIR - ENA OPS: PRIM_CCS_CB_EXT_2_RT_FDIR_INH_JCP_2_RT_19 PUI: LADP01MDAVUOJ	
			JEM CHANNEL B FINAL ACTIVATION	
			NOTE ONCE JCP B IS ACTIVATED SYSTEM DISPLAYS ARE VALID FOR COMMAND AND TELEMETRY.	
			VERIFY COMMUNICATION STATUS BETWEEN JCP B AND DIU_EPS2	
102-099	KCDH	MS1	PCS JPM:CDH:JEM SLB 1 'DIU EPS 2 ' VERIF: DI DF STAT – CURRENT ENG: DIU_EPS_DI DF_STATUS PUI: JSDC00SWA620J ~OMRSD A3000MI.100-A (PARTIAL CDH DIU EPS 2)	

RELEASED - Printed documents may be obsolete; validate prior to use.

SECTION IV - OPERATION INSTRUCTIONS

SEQ/STEP	CMD	RESP	DESCRIPTION	VERIF.
			INHIBIT BUS RT FDIR BETWEEN C&C MDM AND DIU-EPS-2	
102-100	KCDH	MS1	PCS JPM CHANNEL B INITIAL ACTIVATION 'DIU EPS 2' 1. CMD: RT-FDIR – INHIBIT PUI: LADD96IM0770K OPS: PRIM_CCS_INH_RT_FDIR_TMPLT GMT _____:_____:_____ (HR:MIN:SEC) 2. VERIFY: RT-FDIR - INH OPS: PRIM_CCS_CB_EXT_2_RT_FDIR_INH_JCP_2_RT_19 PUI: LADP01MDAVUXJ	
			VERIFY PDB-DMS2 STATUS	
			NOTE PDB-DMS2 WAS ACTIVATED PRIOR TO JCP BUT COMMUNICATION WAS NOT ESTABLISHED UNTIL JCP – B ACTIVATION.	
102-101	KEPS	MS1	PCS JPM:EPS:PDB DMS 2 'PDB DMS2 RPC DETAILS' 'PDB DMS2' VERIFY: 1. DATA FRAME STATUS - CURRENT PUI: JSDC00SWP620J ENG: PDB_DMS2 DF STATUS 2. HEALTH SUMMARY – BLANK (NORMAL) PUI: JSDC00FCP600J ENG: PDB_DMS2 HEALTH STATUS SUMMARY	
102-102	KEPS		TCMS PDB DMS2:JPM EPS PDB DMS2 RECORD PDB_DMS2 INPUT VOLTAGE _____ (BD) PUI: JSDC00FCP610V ENG: PDB_DMS2 INPUT VOLTAGE	

RELEASED - Printed documents may be obsolete; validate prior to use.

SECTION IV - OPERATION INSTRUCTIONS

SEQ/STEP	CMD	RESP	DESCRIPTION	VERIF.
			VERIFY DIU-B1 STATUS	
			NOTE DIU B1 WAS ACTIVATED AUTOMATICALLY DURING JEM INITIAL ACTIVATION, BUT COMMUNICATION WAS NOT ESTABLISHED UNTIL JCP – B ACTIVATION.	
102-103	KCDH	MS1	PCS JPM:CDH:JEM SLB 1 'DIU B1' VERIFY: 1. DI DF STATUS – CURRENT ENG: DIU_B1_DI DF STATUS PUI: JSDC00SWD620J 2. DI HEALTH STAT- NORMAL ENG: DIU B1 MONITOR STATUS PUI: JSDC00FCD601J ~OMRSD A3000MI.100-A (PARTIAL CDH DIU B1)	
102-104	KCDH		TCMS (JPM/ DIU B1) 'DIU BIT STATUS' 1. BIT STAT - VALID ENG: DIU_B1 BIT STATUS PUI: JSDC00FCD60EJ 2. BIT RESULT - NORMAL ENG: DIU_B1 BIT RESULT PUI: JSDC00FCD60FJ ~OMRSD A3000MI.100-A (PARTIAL CDH DIU B1)	

RELEASED - Printed documents may be obsolete; validate prior to use.

SECTION IV - OPERATION INSTRUCTIONS

SEQ/STEP	CMD	RESP	DESCRIPTION	VERIF.

VERIFY COM BETWEEN DIU-B1 AND PDU-B2 STATUS

NOTE

PDU-B2 WAS ACTIVATED AUTOMATICALLY DURING JEM INTIAL ACTIVATION, BUT COMMUNICATION WAS NOT ESTABLISHED UNTIL DIU–B1 COMMUNICATION WAS ESTABLISHED.

102-105 KEPS MS1

PCS
JPM:EPS:PDU_B2
'PDU_B2_RPC_DETAILS'
'PDU B2'

VERIFY

1. DATA FRAME STATUS – CURRENT
   PUI: JSDC00SWPG30J
   ENG: PDU PL B DF STATUS

2. HEALTH SUMMARY – BLANK (NORMAL)
   PUI: JSDC00FCPG00J
   ENG: PL PDU B HEALTH STATUS SUMMARY

~OMRSD A3000MI.100-A (EPS PDU B2)

102-106 KEPS

TCMS
PDU B2:JPM EPS PDU B2

RECORD:
1. JRPCM1 INPUT VOLTAGE _____ (BD)
   ENG: PL_PDU_B RPCM(RPC1-7) INPUT VOLTAGE
   PUI: JSDC00FCPG1XV

2. JRPCM2 INPUT VOLTAGE _____ (BD)
   ENG: PL_PDU_B RPCM(RPC8-13) INPUT VOLTAGE
   PUI: JSDC00FCPG1YV

RELEASED - Printed documents may be obsolete; validate prior to use.

SECTION IV - OPERATION INSTRUCTIONS

SEQ/STEP	CMD	RESP	DESCRIPTION	VERIF.
			VERIFY JEM BUS FIDR BETWEEN JCP AND DIU	
102-107	KCDH		TCMS (DMON) VERIFY: ENG: EVENT INHIBIT FLAG(EPS_RACK2_DIU COMMUNICATION ERROR) – ENABLE PUI: JSDC00SWZ322J	
102-108	KCDH		TCMS (DMON) VERIFY: ENG: EVENT INHIBIT FLAG(DIU_B1 COMMUNICATION ERROR) - ENA PUI: JSDC00SWZ31OJ	
			INHIBIT COMMANDING FROM DIU_EPS 2 AND C&C MDM	
102-109	KCDH	SSFE	CES MATE LOAD AND RUN MATE SCRIPT MEIT3_MATE_CMDS INDEX: 0X000B CMD: JPM_CDH_DIU_B4_CMD_RCV_FROM_C&C_MDM_INH PUI: JSDD96IM0009K GMT _____:_____:_____ (HR:MIN:SEC)	
102-110	KCDH		TCMS(DMON) VERIFY: ENG: EPS_RACK2_DIU MDM COMMAND INHIBIT FLAG – INHIBIT PUI: JSDC00FCA61QJ	
			INHIBIT COMM BETWEEN DIU-EPS-2 AND C&C MDM	
102-111	KCDH	MS1	PCS TASK:JPM CHANNEL B INITIAL ACTIVATION 'DIU EPS 2' 1. CMD: RT I/0 – INHIBIT PUI: LADD96IM1019K OPS:PRIM_CCS_INH_RT_TMPLT GMT _____:_____:_____ (HR:MIN:SEC) 2. VERIFY: RT I/O – INH PUI: LADP01MDAVUTJ ~OMRSD A3000MI.100-A (PARTIAL CDH DIU EPS 2)	

RELEASED - Printed documents may be obsolete; validate prior to use.

SECTION IV - OPERATION INSTRUCTIONS

SEQ/STEP	CMD	RESP	DESCRIPTION	VERIF.

NOTE

ONCE COM IS INHIBITED BETWEEN DIU EPS2 AND C&C MDM THE ACTIVATION PUIS ARE NO LONGER VALID. THE PCS TASK DISPLAYS ARE NO LONGER VALID.

ACTIVATE PDB B1

NOTE

PDB B1 COMMUNICATION INTERFACE IS AUTOMATICALLY ESTABLISHED AFTER PDU B1 RPC 9 IS CLOSED

102-112 KEPS MS1 PCS
JPM:EPS:PDU B1
'PDU B1 RPC DETAILS'
'JRPCM2'

1. CMD: PDU B1 RPC9 - CLOSE
   PUI: JSPX96IM0769K
   OPS: JPM_EPS_PDU_B1_RPC09_(PDB_B1)_CL
   EXECUTE

   GMT _____:_____:_____ (HR:MIN:SEC)

2. VERIFY: PDU B1 RPC 9 POSN - CL
   PUI: JSDC00FCPI0RJ
   ENG: SYS_PDU_B RPC9 POWER STATUS

~OMRSD A3000ME.300-A (PARTIAL EPS CHANNELIZATION – PDB B1)

102-113 KEPS MS1 PCS
JPM:EPS:PDB B1
'PDB B1 RPC DETAILS'
'PDB B1'

VERIFY:

1. PDB B1 DATA FRAME STATUS – CURRENT
   PUI: JSDC00SWP320J
   ENG: PDB_B1 DF STATUS

2. HEALTH SUMMARY – NORMAL
   PUI: JSDC00FCP300J
   ENG: PDB_B1 HEALTH STATUS SUMMARY

RELEASED - Printed documents may be obsolete; validate prior to use.

SECTION IV - OPERATION INSTRUCTIONS

SEQ/STEP	CMD	RESP	DESCRIPTION	VERIF.
102-114	KEPS		TCMS PDB B1:JPM EPS PDB B1 RECORD: 1. PDB_B1 INPUT VOLTAGE _____(BD) ENG: PDB_B1 INPUT VOLTAGE PUI: JSDC00FCP31LV **ACTIVATE DIU-B3** **NOTE** DIU B3 COMMUNICATION INTERFACE WITH JCP-B IS AUTOMATICALLY ESTABLISHED AFTER PDB B1 RPC 10 IS CLOSED	
102-115	KCDH	MS1	PCS JEM EPS:PDB B1:PDB B1 RPC DETAILS 'PDB B1 RPC DETAILS' 1. CMD: RPC 2 (DIU B3 VDO) – CLOSE PUI: JSPX96IM0479K OPS: JPM_EPS_PDB_B1_RPC02_(DIU_B3_VLV)_CL GMT _____:_____:_____ (HR:MIN:SEC) 2. VERIFY: RPC2 (DIU B3 VDO) POSN – CL ENG:PDB_B1 RPC2 POWER STATUS PUI: JSDC00FCP30KJ	
102-116	KCDH	MS1	PCS JEM EPS:PDB B1:PDB_B1_RPC _DETAILS 'PDB B1 RPC DETAILS' 1. CMD: RPC 10 DIU B3 CNTRL - CLOSE PUI: JSPX96IM0483K OPS: JPM_EPS_PDB_B1_RPC10_(DIU_B3_CNTLR)_CLOSE GMT _____:_____:_____ (HR:MIN:SEC) 2. VERIFY: RPC10 DIU B3 CNTRL POSN – CL ENG: PDB_B1 RPC10 POWER STATUS PUI: JSDC00FCP30SJ ~OMRSD A3000ME.300-D (PARTIAL EPS CHANNELIZATION – DIU B3 CTRL PWR)	

RELEASED - Printed documents may be obsolete; validate prior to use.

SECTION IV - OPERATION INSTRUCTIONS

SEQ/STEP	CMD	RESP	DESCRIPTION	VERIF.
			VERIFY DIU B3 STATUS	
			NOTE: IT MAY TAKE UP TO ONE MINUTE TO PERFORM THE VERIFICATIONS IN THE FOLLOWING 2 STEPS.	
102-117	KCDH	MS1	PCS JPM:JEM CDH:JEM SLB 1 'JEM_SLB_1' 'DIU B3' VERIFY 1. DI DF_STAT - CURRENT ENG: DIU_B3_DI DF STATUS PUI: JSDC00SWDA20J 2. DI HEALTH STAT- NORMAL ENG: DIU_B3 MONITOR STATUS PUI: JSDC00FCDA01J ~OMRSD A3000MI.100-A (PARTIAL CDH DIU B3)	
102-118	KCDH		TCMS (DIU_B3) 'DIU BIT' VERIFY: 1. BIT STATUS – VALID ENG: DIU_B3 BIT STATUS PUI: JSDC00FCDA0EJ 2. BIT RESULT – NORMAL ENG: DIU_B3 BIT RESULT PUI: JSDC00FCDA0FJ ~OMRSD A3000MI.100-A (PARTIAL CDH DIU B3)	

RELEASED - Printed documents may be obsolete; validate prior to use.

SECTION IV - OPERATION INSTRUCTIONS

SEQ/STEP	CMD	RESP	DESCRIPTION	VERIF.

ENABLE COMM BETWEEN PDB-EPS2 AND DIU-B3

NOTE:

PDB EPS2 WAS ACTIVATED AUTOMATICALLY IN INTITIAL ACTIVATION BUT COMMUNICATION IS ESTABLISHED AFTER DIU B3 IS ACTIVATED, SO IT IS VERIFIED IN FINAL ACTIVATION.

102-119 KCDH SSFE CES MATE
LOAD AND RUN MATE SCRIPT
MEIT3_MATE_CMDS
INDEX 0X0021

CMD: JPM_CDH_DIU/ORU_(RS422)_COMM_START_TMPLT
PUI: JSDD96IM0035K
PARAMETER: 11 (DIU-B3)
PARAMETER: 1 (PDB-EPS2)

GMT _____:_____:_____ (HR:MIN:SEC)

102-120 KEPS MS1 PCS
JEM:EPS:PDB EPS2
'PDB EPS2 RPC DETAILS'
'PDB EPS2'

VERIFY:

1. DATA FRAME STATUS- CURRENT
   PUI: JSDC00SWP820J
   ENG: PDB_EPS2 DF STATUS

2. HEALTH SUMMARY – BLANK (NORMAL)
   PUI: JSDC00FCP800J
   ENG: PDB_EPS2 HEALTH STATUS SUMMARY

~OMRSD A3000MI.100-A (EPS PDB EPS2)

102-121 KEPS TCMS
PDB EPS2:JPM EPS PDB EPS2

1. RECORD:
   PDB_EPS2 INPUT VOLTAGE _____ (BD)
   ENG: (PDB_EPS2 INPUT VOLTAGE)
   PUI: JSDC00FCP810V

RELEASED - Printed documents may be obsolete; validate prior to use.

SECTION IV - OPERATION INSTRUCTIONS

SEQ/STEP	CMD	RESP	DESCRIPTION	VERIF.

ACTIVATE DIU-B2

NOTE

DIU B2 COMMUNICATION INTERFACE WITH JCP-B
IS AUTOMATICALLY ESTABLISHED AFTER PDB B1
RPC 9 IS CLOSED

102-122 KCDH MS1 PCS
JEM EPS:PDB B1:PDB_B1_RPC_DETAILS
'PDB B1 RPC DETAILS'

1. CMD: RPC 1 (DIU B2 VDO) – CLOSE
PUI: JSPX96IM0478K
OPS: JPM_EPS_PDB_B1_RPC01 (DIU_B2_VLV)_CL

GMT _____:_____:_____ (HR:MIN:SEC)

2. VERIFY: RPC1 (DIU B2 VDO) POSN – CL
ENG:PDB_B1 RPC1 POWER STATUS
PUI: JSDC00FCP30JJ

102-123 KCDH MS1 PCS
JEM_EPS:PDB B1:PDB_B1_RPC_DETAILS
'PDB B1 RPC DEATAILS'

1. CMD: RPC9 (DIU_B2_CNTL) - CLOSE
PUI: JSPX96IM0482K
OPS:
JPM_EPS_PDB_B1_RPC09_(DIU_B2_CNTLR)_CL
EXECUTE

GMT _____:_____:_____ (HR:MIN:SEC)

2. VERIFY: RPC9 (DIU B2 CNTLR) POSN – CL
ENG: PDB_B1 RPC9 POWER STATUS
PUI: JSDC00FCP30RJ

~OMRSD A3000ME.300-D (PARTIAL EPS
CHANNELIZATION – DIU B2 CTRL PWR)

RELEASED - Printed documents may be obsolete; validate prior to use.

SECTION IV - OPERATION INSTRUCTIONS

SEQ/STEP	CMD	RESP	DESCRIPTION	VERIF.
			VERIFY DIU-B2 STATUS	
			NOTE: IT MAY TAKE UP TO ONE MINUTE TO PERFORM THE VERIFICATIONS IN THE FOLLOWING 2 STEPS.	
102-124	KCDH	MS1	PCS JPM:CDH:JEM_SLB_1 'DIU B2' VERIFY: 1. DI DF STAT – CURRENT ENG: DIU_B2_DI DF STATUS PUI: JSDC00SWD820J 2. DI HEALTH STAT – NORMAL ENG: DIU_B2 MONITOR STATUS PUI: JSDC00FCD801J ~OMRSD A3000MI.100-A (PARTIAL CDH DIU B2)	
102-125	KCDH		TCMS (DIU_B2) 'DIU BIT' VERIFY: 1. BIT STAT – VALID ENG: DIU_B2 BIT STATUS PUI: JSDC00FCD80EJ 2. BIT RESULT – NORMAL ENG: DIU_B2 BIT RESULT PUI: JSDC00FCD80FJ ~OMRSD A3000MI.100-A (PARTIAL CDH DIU B2)	

RELEASED - Printed documents may be obsolete; validate prior to use.

SECTION IV - OPERATION INSTRUCTIONS

SEQ/STEP	CMD	RESP	DESCRIPTION	VERIF.
			ACTIVATE PDB_B2	
102-126	KEPS	MS1	PCS JPM:EPS:PDU B1 'PDU B1 RPC DETAILS' 'JRPCM1' 1. CMD: PDU B1 RPC2 - CLOSE PUI: JSPX96IM0765K OPS: PDU_B1_RPC2_CL_(PDB_B2) GMT _____:_____:_____ (HR:MIN:SEC) 2. VERIFY: PDU B1 RPC2 POSN - CL PUI: JSDC00FCPI0KJ ENG: SYS_PDU_B RPC2 POWER STATUS	
102-127	KEPS		PCS JPM:EPS:PDB B2 'PDB B2 RPC DETAILS' 'PDB B2' 1. DATA FRAME STATUS - CURRENT PUI: JSDC00SWP420J ENG: PDB_B2 DF_STATUS 2. HEALTH SUMMARY – BLANK (NORMAL) PUI: JSDC00FCP400J ENG: PDB_B2 HEALTH STATUS SUMMARY ~OMRSD A3000ME.300-A (PARTIAL EPS CHANNELIZATION – PDB B2)	
102-128	KEPS		TCMS PDB B2:JPM EPS PDB B2 RECORD: PDB_B2 INPUT VOLTAGE _____ (BD) ENG: PDB_B2 INPUT VOLTAGE PUI: JSDC00FCP410V	

RELEASED - Printed documents may be obsolete; validate prior to use.

SECTION IV - OPERATION INSTRUCTIONS

SEQ/STEP	CMD	RESP	DESCRIPTION	VERIF.
			ACTIVATE PIB_B2	
102-129	KEPS	MS1	PCS JPM:EPS:PDB B1 'PDB B1 RPC DETAILS' 'PDB B1' 1. CMD: PDB B1 RPC3(PIB_B2) - CLOSE PUI JSPX96IM0480K OPS: JPM_EPS_PDB_B1_RPC03_(PIB_B2)_CL EXECUTE: GMT _____:_____:_____ (HR:MIN:SEC) 2. VERIFY: PDB B1 RPC 3 POSN - CL PUI: JSDC00FCP30LJ ENG: PDB_B1 RPC3 POWER STATUS ~OMRSD A3000ME.300-D (PARTIAL EPS CHANNELIZATION – PIB B2)	
102-130	KEPS	MS1	PCS JPM:EPS:PIB B2 "PIB B2 SWITCH DETAILS" 1. DATA FRAME STATUS – CURRENT PUI: JSDC00SWP70J ENG:PIB_B2 DF_STATUS 2. HEALTH SUMMARY – BLANK (NORMAL) PUI: JSDC00FCPK00J ENG: PIB_B2 HEALTH STATUS SUMMARY	
102-131	KEPS		TCMS PIB B2:JPM EPS PIB B2 VERIFY: 1. PIB_B2_BIT_STAT – VALID ENG: PIB_B2 BIT STATUS PUI: JSDC00FCPK39J 2. PIB_B2 BIT RESULT - NORMAL ENG: PIB_B2 BIT RESULT PUI: JSDC00FCPK3AJ	

RELEASED - Printed documents may be obsolete; validate prior to use.

SECTION IV - OPERATION INSTRUCTIONS

SEQ/STEP	CMD	RESP	DESCRIPTION	VERIF.
			ACTIVATE DIU_B1_VDO	
102-132	KCDH	MS1	PCS JEM EPS:PDB EPS2:PDB_EPS2_RPC DETAILS 'PDB EPS2 RPC DETAILS' 1. CMD:RPC 2 DIU B1 (VLV PWR) - CLOSE PUI: JSPX96IM0563K OPS: JPM_EPS_PDB_B_EPS2_RPC02_(DIU_B1_VLV)_CL EXECUTE GMT _____:_____:_____ (HR:MIN:SEC) 2. VERIFY: RPC 2 DIU B1(VLV PWR) POSN- CL ENG: : PDB_EPS2 RPC2 POWER STATUS PUI: JSDC00FCP80DJ	
			SET PIB-B1 LOAD LIMIT TABLE	
			DEACTIVATE MTL	
102-133	KTCS	MS1	PCS JPM:TCS 'JEM:ATCS OVERVIEW' 'TCA' VERIFY TCA M MTL TEMP – 13-22 DEGC ENG: JPM_ATCS_TCA_M_MTL_TWMV_B_CNTL_TEMP PUI: JSDC00FCTC0UT	
			DEACTIVATE MTL TEMP CNTRL	
102-134	KTCS	SSFE	CES MATE LOAD AND RUN MATE SCRIPT MEIT3_MATE_CMDS INDEX: 0X0108 CMD: TCA M MTL TEMP CNTL – STOP PUI: JSTE96IM0339K OPS: JPM_ATCS_TCA_M_MTL_TWMV_B_TEMP_(MTL_ STOP_(OVRD) GMT _____:_____:_____ (HR:MIN:SEC)	

RELEASED - Printed documents may be obsolete; validate prior to use.

SECTION IV - OPERATION INSTRUCTIONS

SEQ/STEP	CMD	RESP	DESCRIPTION	VERIF.
102-135	KTCS	MS1	PCS JPM ATCS MTL 'TCV B' 'MTL TCV B' VERIFY: TCA M MTL TEMP CNTL OPER STAT – STOPPED ENG: TCA_M MTL TEMP CNTRL EXECUTING STATUS PUI: JSDC00FCTC0IJ **DEACTIVATE MTL TCV B**	
102-136	KTCS	SSFE	CES MATE LOAD AND RUN MATE SCRIPT MEIT3_MATE_CMDS INDEX: 0X0109 CMD: SWITCH 3 (TCA M MTL TWMV) – OPEN PUI: JSPC96IM0006K OPS: JPM_EPS_PIB_B1_120V_L_SW03_ (TCA_M_MTL_TWMV_B)_OP_(OVRD) GMT _____:_____:_____ (HR:MIN:SEC)	
102-137	KTCS	MS1	PCS TCS:JPM ATCS OVERVIEW 'JPM MTL ACTIVATION' '120 V/0.5A' VERIFY: SWITCH 3 (TCA M MTL TWMV) POSN – OP ENG: PIB_B1 120V_L SW3 POWER STATUS PUI: JSDC00FCPE22J	

RELEASED - Printed documents may be obsolete; validate prior to use.

SECTION IV - OPERATION INSTRUCTIONS

SEQ/STEP	CMD	RESP	DESCRIPTION	VERIF.
			STOP SAMPLING FROM PIB B1	
102-138	KEPS	SSFE	CES MATE LOAD AND RUN MATE SCRIPT MEIT3_MATE_CMDS INDEX: 0X0044 CMD: JPM_CDH_DIU/ORU_(RS422)_COMM_STOP_TMPLT PUI: JSDD96IM0036K PARAMETER 1:DIU_EPS2 (5) PARAMETER 2:PIB_B1 (3) GMT _____:_____:_____ (HR:MIN:SEC)	
102-139	KEPS	MS1	PCS JPM:EPS:PIB B1 'PIB B1 SWITCH DETAILS' VERIFY: DATA FRAME STATUS – LAST_VALUE ENG: PIB_B1 DF STATUS PUI: JSDC00SWPE70J	
			SET LOAD PARAMETER TABLE TO PIB_B1 **NOTE** PIB_B1 LOAD PARAMETER TABLE AND COMMUNICATION INTERFACE WITH THE JCP ARE AUTOMATICALLY ESTABLISHED AFTER PDB_EPS2 RPC 3 IS CLOSED.	
102-140	KEPS	MS1	PCS JPM:EPS:PDB EPS2 'PDB EPS2 RPC DETAILS' 'PDB EPS2' 1. CMD: PDB EPS2 RPC 3 - CLOSED PUI: JSPX96IM0564K OPS: JPM_EPS_PDB_B_EPS2_RPC03_(PIB_B1)_CL EXECUTE GMT _____:_____:_____ (HR:MIN:SEC) 2. VERIFY: PDB EPS2 RPC 3 POSN – CL PUI: JSDC00FCP80EJ ENG: PDB_EPS2 RPC3 POWER STATUS	

RELEASED - Printed documents may be obsolete; validate prior to use.

SECTION IV - OPERATION INSTRUCTIONS

SEQ/STEP	CMD	RESP	DESCRIPTION	VERIF.
102-141	KEPS	MS1	PCS JPM:EPS:PIB B1 'PIB B1 SWITCH DETAILS' 'PIB B1' VERIFY: 1. DATA FRAME STATUS – BLANK (CURRENT) PUI: JSDC00SWPE70J ENG: PIB_B1_DF STATUS 2. HEALTH STATUS SUMMARY – BLANK (NORMAL) PUI: JSDC00FCPE00J ENG: PIB_B1_HEALTH STATUS SUMMARY **REACTIVATE MTL CONTROL**	
102-142	KTCS	MS1	PCS JPM:EPS:PIB B1 'PIB B1 SWITCH DETAILS' '120 V/0.5 A' 1. CMD: SWITCH 3 (TCA M MTL TWMV B) – CLOSE PUI: JSTE96IM0192K OPS: JPM_EPS_PIB_B1_120V_L_SW03_(TCA_M_MTL_TWMV_B)_CL GMT _____:_____:_____ (HR:MIN:SEC) 2. VERIFY: SWITCH 3 (TCA M MTL TWMV B) POSN – CL ENG: PIB_B1 120V_L SW3 POWER STATUS PUI: JSDC00FCPE22J	

RELEASED - Printed documents may be obsolete; validate prior to use.

SECTION IV - OPERATION INSTRUCTIONS

SEQ/STEP	CMD	RESP	DESCRIPTION	VERIF.
102-143	KTCS	MS1	PCS JPM:TCS:JPM ATCS MTL 'JPM ATCS MTL' 'MTL TCV B' 1. CMD: TCA M MTL TEMP CNTL – START PUI: JSTE96IM0316K OPS: JPM_ATCS_TCA_M_MTL_TWMV_B_TEMP_CNTL_START GMT _____:_____:_____ (HR:MIN:SEC) 2. VERIFY OPER STAT – EXEC ENG: TCA_M MTL TEMP CNTRL EXECUTING STATUS PUI: JSDC00FCTC0IJ **NOTE** ALLOW SYSTEM TO THERMALLY STABILIZE PRIOR TO PERFORMING NEXT STEP.	
102-144	KTCS	MS1	PCS JPM:TCS 'JEM:ATCS OVERVIEW' 'TCA' VERIFY TCA M MTL TEMP – 13-22 DEGC ENG: JPM_ATCS_TCA_M_MTL_TWMV_B_CNTL_TEMP PUI: JSDC00FCTC0UT	

RELEASED - Printed documents may be obsolete; validate prior to use.

SECTION IV - OPERATION INSTRUCTIONS

SEQ/STEP	CMD	RESP	DESCRIPTION	VERIF.
			PERFORM EPS MEASUREMENTS	
			NOTE QUIET TIME IS REQUIRED DURING CONDUCTED EMISSIONS/VOLTAGE RIPPLE AND POWER QUALITY MEASUREMENTS.	
102-145	PTC	KEPS DKQM	PERFORM POWER QUALITY AND EME MEASUREMENTS FOR NODE2/JEM LOAD CONFIGURATION 2 PER EPS B-STRING POWER QUALITY AND EME R0031V2 SEQUENCE 105 TASK II. REPORT COMPLETION. START GMT _____:_____:_____ (DAY:HR:MIN) COMPLETE GMT _____:_____:_____ (DAY:HR:MIN)	NV:_____
102-146	KEPS	PTC	OK TO PROCEED WITH SEQUENCE	
			NOTE SEQ 106 B STRING HEALTH STATUS CHECKS WILL BE PERFORMED IN PARALLEL WITH THE REMAINDER OF THIS SEQUENCE.	
			POWER ON TCS B SENSORS	
			ACTIVATE JEF B-SIDE HEAT EXCHANGER FLOW RATE SENSOR B	
102-147	KTCS	SSFE	CES MATE LOAD AND RUN MATE SCRIPT MEIT3_MATE_CMDS INDEX: 0X010A CMD: PIB B2 120V SW36 CLOSE PUI: JSTE96IM0233K OPS: PIB_B2_120V_L_SW36_CL_(MTL_JEF_HX_FR_SNSR_B) GMT _____:_____:_____ (HR:MIN:SEC)	

RELEASED - Printed documents may be obsolete; validate prior to use.

SECTION IV - OPERATION INSTRUCTIONS

SEQ/STEP	CMD	RESP	DESCRIPTION	VERIF.
102-148	KTCS		TCMS VERIFY PIB B2 120V SW36 POWER STATUS – CL PUI: JSDC00FCPK2ZJ ENG: PIB_B2 120V_L SW36 POWER STATUS	
102-149	KTCS	MS1	PCS JPM:TCS 'JPM ATCS OVERVIEW' 'LOOP' VERIFY/RECORD: MTL JEF HX IN FLOW RATE B_____(> 100 KG/HR) PUI: JSDC00FCT180R ENG: EF_HX_MTL_FLOW_RATE_B **ACTIVATE B-SIDE MTL DIFFERENTIAL PRESSURE SENSOR**	
102-150	KTCS	SSFE	CES MATE LOAD AND RUN MATE SCRIPT MEIT3_MATE_CMDS INDEX: 0X00AD CMD: PIB B2 15V SW7 CLOSE PUI: JSPX96IM0790K OPS: PIB_B2_15V_SW7_CL_(MTL_DIFF_PRESS_SNSR_B) GMT _____:_____:_____ (HR:MIN:SEC)	
102-151	KTCS		TCMS VERIFY PIB_B2 15V SW7 POWER STATUS – CL PUI: JSDC00FCPK1UJ ENG: PIB_B2 15V SW7 POWER STATUS	

RELEASED - Printed documents may be obsolete; validate prior to use.

SECTION IV - OPERATION INSTRUCTIONS

SEQ/STEP	CMD	RESP	DESCRIPTION	VERIF.
102-152	KTCS	MS1	PCS JEM:_TCS 'JPM ATCS OVERVIEW' 'LOOP' VERIFY/RECORD: MTL LOOP DP B - _____ (>51.6 KPAD) PUI: JSDC00FCT010P ENG: MTL_DIFF_PRESS_B **ACTIVATE N2 PRESSURE SENSOR**	
102-153	KECL	MS1	PCS JPM:ECLSS:JPM_ESS:PIB_B1 SWITCH DETAILS PIB B1 SWITCH DETAILS '15V/0.05A' 1. CMD: SWITCH 2 (GN2 SPLY LINE PRESS SNSR B) - CLOSE OPS: JPM_EPS_PIB_B1_15V_SW02_(GN2 SPLY LINE PRESS SNSR)_CL PUI: JSPX96IM0672K GMT _____:_____:_____ (HR:MIN:SEC) 2. VERIFY: SWITCH 2 (GN2 SPLY LINE PRESS SNSR B) POSN – CL ENG: PIB_B1 15V SW2 POWER STATUS PUI: JSDC00FCPE1PJ ~OMRSD A3000ME.300-E (PARTIAL EPS CHANNELIZATION – N2 PRESSURE SENSOR)	

RELEASED - Printed documents may be obsolete; validate prior to use.

SECTION IV - OPERATION INSTRUCTIONS

SEQ/STEP	CMD	RESP	DESCRIPTION	VERIF.
102-154	KECL	MS1	PCS JPM:ECLSS:JPM_ESS JPM ESS 'GAS SUPPLY' VERIFY/RECORD: PRESS – _____ KPA (607-827 KPA) ENG: N2_SUPPLY_LINE_PRESS PUI: JSDC00FCK200P **SELECT FAS/LIMIT SET FOR N2 SUPPLY GAS PRESSURE**	
102-155	KECL	SSFE	CES MATE LOAD AND RUN MATE SCRIPT MEIT3_MATE_CMDS INDEX: 0X0051 CMD: LIMIT SET(N2 GAS LINE PRESSURE HIGH) – 1 OPS: JPM_CDH_ACTIVE_JCP_EVENT_LIM_SET_NUM_SEL_TMPLT PARAMETER: 496 (N2 GAS LINE PRESSURE HIGH) PARAMETER: 1 PUI: JSDD96IM0224K GMT _____:_____:_____ (HR:MIN:SEC)	
102-156	KECL		TCMS:DMON VERIFY: N2 GAS LINE PRESSURE HIGH LIMIT - 1 ENG: LIMIT SET (N2 GAS LINE PRESSURE HIGH) - 1 PUI: JSDC00SWZ29ZU	
102-157	KECL	SSFE	CES MATE LOAD AND RUN MATE SCRIPT MEIT3_MATE_CMDS INDEX: 0X0052 CMD: LIMIT SET(N2 GAS LINE PRESSURE LOW) – 1 OPS: JPM_CDH_ACTIVE_JCP_EVENT_LIM_SET_NUM_SEL_TMPLT PARAMETER: 545 (N2 GAS LINE PRESSURE LOW) PARAMETER: 1 PUI: JSDD96IM0224K GMT _____:_____:_____ (HR:MIN:SEC)	

RELEASED - Printed documents may be obsolete; validate prior to use.

SECTION IV - OPERATION INSTRUCTIONS

SEQ/STEP	CMD	RESP	DESCRIPTION	VERIF.
102-158	KECL		TCMS:B-STRING N2 SUPPLY LINE PRESSURE SENSOR B VERIFY: N2 GAS LINE PRESSURE LOW - LIMIT 1 ENG: LIMIT SET (N2 GAS LINE PRESSURE LOW) PUI: JSDC00SWZ2D9U **SELECT FAS/LIMIT SET FOR MTL EFHX FLOW RATE**	
102-159	KTCS	SSFE	CES MATE LOAD AND RUN MATE SCRIPT MEIT3_MATE_CMDS INDEX: 0X0053 CMD: LIMIT SET(EF_HX MTL FLOW RATE LOW(B)) - 1 PUI: JSDD96IM0224K OPS: JPM_CDH_ACTIVE_JCP_EVENT_LIM_SET_NUM_SEL_TMPLT PARAMETER: 529 (EF_HX MTL FLOW RATE LOW(B)) PARAMETER: 1 GMT _____:_____:_____ (HR:MIN:SEC)	
102-160	KTCS		TCMS VERIFY: ENG: LIMIT SET(EF_HX MTL FLOW RATE LOW(B))- 1 PUI: JSDC00SWZ2CWU **SELECT FAS/LIMIT SET FOR MTL DIFFERENTIAL PRESS**	
102-161	KTCS	SSFE	CES MATE LOAD AND RUN MATE SCRIPT MEIT3_MATE_CMDS INDEX: 0X0054 CMD: LIMIT SET (MTL DIFFERENTIAL PRESSURE LOW(B)) - 1 PUI: JSDD96IM0224K OPS: JPM_CDH_ACTIVE_JCP_EVENT_LIM_SET_NUM_SEL_TMPLT PARAMETER: 501 (MTL DIFFERENTIAL PRESSURE LOW(B)) PARAMETER: 1 GMT _____:_____:_____ (HR:MIN:SEC)	

RELEASED - Printed documents may be obsolete; validate prior to use.

SECTION IV - OPERATION INSTRUCTIONS

SEQ/STEP	CMD	RESP	DESCRIPTION	VERIF.
102-162	KTCS		TCMS VERIFY: LIMIT SET(MTL DIFFERENTIAL PRESSURE LOW(B)) - 1 PUI: JSDC00SWZ2A2U **OPEN AFT N2 SUPPLY VALVE**	
102-163	KECL	MS1	PCS JPM:ECLSS:JPM ESS:PIB B1 SWITCH DETAILS PIB B1 SWITCH DETAILS '120V/0.5A' 1. CMD: SWITCH 6 (GN2 STBD DECK SOV B) - CLOSE PUI: JSPX96IM0675K OPS: JPM_EPS_PIB_B1_120V_L_SW06_(N2_STBD_DECK_SOV_B)_CL GMT _____:_____:_____ (HR:MIN:SEC) 2. VERIFY: SWITCH 6 (GN2 STBD DECK SOV B) POSN – CL ENG: PIB_B1 120V L SW6 POWER STATUS PUI: JSDC00FCPE25J	

RELEASED - Printed documents may be obsolete; validate prior to use.

SECTION IV - OPERATION INSTRUCTIONS

SEQ/STEP	CMD	RESP	DESCRIPTION	VERIF.

NOTE

AFT N2 SUPPLY VALVE IS NOT MOVED BY THESE STEPS BECAUSE VALVE ALREADY IS OPEN BEFORE THESE STEPS FOR PROVIDED N2 GAS TO ACCUMLATOR.

102-164 KECL MS1 PCS
JPM:ECLSS:JPM ESS
JPM ESS

'GAS SUPPLY'

1. CMD: STBD AFT SOV POSITION - OPEN
   PUI: JSEP96IM0015K
   ENG: OPEN AFT_N2_SUPPLY_VALVE

   GMT _____:_____:_____ (HR:MIN:SEC)

VERIFY/RECORD:

NOTE

THE PCS DISPLAY HAS THE TWO VALVE POSITIONS SWAPPED (FWD LABELED AFT, AFT LABELED FWD). WHEN VERIFYING VALVE POSITIONS, CHECK THE OPPOSITE FIELD ON THE PCS, AND ALSO VERIFY ON TCMS (WHICH IS CORRECTLY LABELED). THIS IS DOCUMENTED IN _____. SUBSTEP 3 BELOW IS FOR INFORMATIONAL PURPOSES ONLY.

2. STBD AFT SOV POSITION (STACK) - OPEN
   ENG: AFT_N2_SUPPLY_VALVE STACK POSTN
   PUI: JSDC00SWK401J

3. STBD FWD SOV POSITION (STACK) - _____ (BD)
   ENG: FWD_N2_SUPPLY_VALVE STACK POSTN
   PUI: JSDC00SWK411J

4. SWITCH 6 POSN - OP
   ENG: PIB_B1 120V L SW6 POWER STATUS
   PUI: JSDC00FCPE25J

RELEASED - Printed documents may be obsolete; validate prior to use.

SECTION IV - OPERATION INSTRUCTIONS

SEQ/STEP	CMD	RESP	DESCRIPTION	VERIF.
			SET POSITION EF-HX FLOW MODULATION VALVE-B	
102-165	KTCS	SSFE	CES MATE LOAD AND RUN MATE SCRIPT MEIT3_MATE_CMDS INDEX: 0X00C2 CMD: SWITCH 12 - CLOSE PUI: JSTE96IM0225K OPS: POWER_ON PIB_B2_120V_L_SW12 GMT _____:_____:_____ (HR:MIN:SEC)	
102-166	KTCS	MS1	PCS JPM:TCS:JPM ATCS MTL 'JPM ATCS MTL' 'JEFHX' 'IN FCV B' VERIFY PIB B2 120 V L SW 12 POSN – CL ENG: PIB_B2 120V L SW12 POWER STATUS PUI: JSDC00FCPK2BJ	

RELEASED - Printed documents may be obsolete; validate prior to use.

SECTION IV - OPERATION INSTRUCTIONS

SEQ/STEP	CMD	RESP	DESCRIPTION	VERIF.

NOTE

EF HX INLET MTL FLOW MODLT VALVE IS NOT MOVED BY THESE STEPS BECAUSE VALVE ALREADY WAS SET IN PRE-OPERATION.

102-167 KTCS MS1

PCS
JPM:TCS:JPM ATCS MTL
'JPM ATCS MTL'

'JEFHX' 'IN FCV B'

1. ENTER VALVE POSN – 28 DEG

2. CMD: VALVE POSN – SET
   PUI: JSTE96IM0268K
   OPS:
   JPM_ATCS_MTL_JEFHX_IN_FAA_B_FCV_POSN_SET_TMPLT
   PARAMETER: 28.0

   GMT _____:_____:_____ (HR:MIN:SEC)

VERIFY:

3. IN FLOW RATE B - > 100 KG/HR
   ENG: EF_HX_MTL_FLOW_RATE_B
   PUI: JSDC00FCT180R

4. PIB_B2 120V L SW12 POSN – OFF
   ENG:JPM_EPS_PIB_B2_120V_L_SW12_
   (MTL_JEFHX_IN_FCV_B)_POSN
   PUI: JSDC00FCPK2BJ

RELEASED - Printed documents may be obsolete; validate prior to use.

SECTION IV - OPERATION INSTRUCTIONS

SEQ/STEP	CMD	RESP	DESCRIPTION	VERIF.
			THC_B_ACTIVATION	
			CHECK JEM MODE	
102-168	KECL	MS1	PCS JEM:CDH “JEM CDH OVERVIEW” ‘JEM MODE’ VERIFY: JEM MODE - STANDARD ENG: JEM MODE STATUS PUI: JSDC00SWZ601J	
			POWER ON THC B CABIN FAN	
			NOTE WHEN THE THC FAN IS ACTIVATED THE PDB B TCS2 RPC01 TRIP STATUS WILL SHOW TRIP, THEN IMMEDIATELY RETURNS TO NORMAL (NO TRIP). THIS ALSO CAUSES THE PDB B TCS2 HEALTH STAT SUM TO INDICATE “ERROR”. HEALTH STATUS SUMMARY ERROR HAS NO IMPACT TO JEM SYSTEMS AND WILL BE RESET BY ACTIVATING THCU B.	
102-169	KECL	MS1	PCS JPM:ECLSS:THC B:THC B COMMANDS:PDB TCS2 RPC DETAILS PDB TCS2 RPC DETAILS ‘PDB TCS2’ 1. CMD: RPC 1 (THC B FAN) - CLOSE PUI: JSPX96IM0601K OPS: JPM_EPS_PDB_B_TCS2_RPC01_(THC_B_FAN)_CL GMT _____:_____:_____ (HR:MIN:SEC) 2. VERIFY: RPC 1 POSN (THC B FAN) - CL ENG: PDB_TCS2 RPC1 POWER STATUS PUI: JSDC00FCPA0CJ ~OMRSD A3000ME.300-C (PARTIAL EPS CHANNELIZATION – THC B CABIN FAN)	

RELEASED - Printed documents may be obsolete; validate prior to use.

SECTION IV - OPERATION INSTRUCTIONS

SEQ/STEP	CMD	RESP	DESCRIPTION	VERIF.
102-170	KECL	MS1	PCS JPM:ECLSS:THC B:THC B COMMANDS: PDB TCS2 RPC DETAILS PDB TCS2 RPC DETAILS 'PDB TCS2' RECORD: HEALTH SUMMARY - _____(BD) ENG: PDB_TCS2 HEALTH STATUS SUMMARY PUI: JSDC00FCPA00J **POWER ON THCU B**	
102-171	KECL	MS1	PCS JPM:EPS:PDB_TCS2 PDB TCS2 RPC DETAILS 'PDB TCS2' 1. CMD: RPC 5 (THCU B) - CLOSE PUI: JSPX96IM0604K OPS: JPM_EPS_PDB_B_TCS2_RPC05_(THCU_B)_CL GMT _____:_____:_____ (HR:MIN:SEC) 2. VERIFY: RPC 5 POSN (THCU B) - CL ENG: PDB_TCS2 RPC5 POWER STATUS PUI: JSDC00FCPA0GJ ~OMRSD A3000ME.300-C (PARTIAL EPS CHANNELIZATION – THC B CNTRL) **NOTE** WAIT 80 SECONDS UNTIL THCU B POWER-ON-BIT IS FINISHED	
102-172	KECL	MS1	PCS JPM:ECLSS:THC B:THC B COMMANDS JPM THC B COMMANDS 'STATUS' VERIFY: DATA FRAME STAT – CURRENT ENG: THC_B DF STATUS PUI: JSDC00SWEC20J	

RELEASED - Printed documents may be obsolete; validate prior to use.

SECTION IV - OPERATION INSTRUCTIONS

SEQ/STEP	CMD	RESP	DESCRIPTION	VERIF.
102-173	KECL	MS1	PCS JPM:ECLSS:THC B:THC B COMMANDS:PDB TCS2 RPC DETAILS PDB TCS2 RPC DETAILS 'PDB TCS2' VERIFY: HEALTH SUMMARY – BLANK (NORMAL) ENG: PDB_TCS2 HEALTH STATUS SUMMARY PUI: JSDC00FCPA00J	
102-174	KECL	MS1	PCS JPM:ECLSS:THC_B:THC_B_COMMANDS JEM THC B COMMANDS 'STATUS' VERIFY: HEALTH STAT SUMM – NORMAL ENG: THC_B HEALTH STATUS SUMMARY STACK PUI: JSDC00FCEC0GJ	
102-175	KECL		TCMS:THC B VERIFY: 1. BIT STATUS (STACK) – VALID ENG: THC_B BIT STATUS STACK PUI: JSDC00FCEC0IJ 2. CNTLR BIT RESULT (STACK) – NORMAL ENG: THC_B CNTLR BIT RESULT STACK PUI: JSDC00FCEC0HJ	
102-176	KECL	MS1	PCS JPM:ECLSS:THC B:THC B COMMANDS JPM THC B COMMANDS 'THC B' 1. VERIFY: OPS MODE – STANDBY ENG: THC_B RUN STATUS PUI: JSDC00FCEC0XJ 2. RECORD: FAN SPEED – _____RPM (BD) ENG: THC_B CABIN FAN SPEED CURRENT PUI: JSDC00FCEC02R	

RELEASED - Printed documents may be obsolete; validate prior to use.

SECTION IV - OPERATION INSTRUCTIONS

SEQ/STEP	CMD	RESP	DESCRIPTION	VERIF.

SELECT THC B FAN SPEED

NOTE

THC B FAN STABALIZATION TAKES APPROXIMATELY 35 SECONDS.

102-177 KECL MS1

PCS
JPM:ECLSS:THC B:THC B COMMANDS
JPM THC B COMMANDS

'FAN'

CMD: SPEED – INTERMEDIATE
PUI: JSET96IM0051K
OPS: JPM_ECL_THC_B_CABIN_FAN_SPD_INTERMEDIATE

GMT _____:_____:_____ (HR:MIN:SEC)
(RECORD IN APPENDIX G)

102-178 KECL MS1

PCS
JPM:ECLSS:THC B:THC B COMMANDS
JPM THC B COMMANDS

'THC B'

VERIFY/RECORD:

1. OPS MODE - MANUAL
   ENG: THC_B RUN STATUS
   PUI: JSDC00FCEC0XJ

2. FAN SPEED – _____RPM (4958-6102 RPM)
   ENG: THC_B CABIN FAN SPEED CURRENT
   PUI: JSDC00FCEC02R

RELEASED - Printed documents may be obsolete; validate prior to use.

SECTION IV - OPERATION INSTRUCTIONS

SEQ/STEP	CMD	RESP	DESCRIPTION	VERIF.

ACTIVATE B STRING CABIN SMOKE DETECTOR

102-179 KECL MS1 PCS
JPM:ECLSS:SD B: PIB B2 SWITCH DETAILS
PIB B2 SWITCH DETAILS

'120V/0.5A'

1. CMD: SWITCH 18 (CABIN SD B) - CLOSE
   OPS:
   JPM_EPS_PIB_B2_120V_L_SW18_(JPM_CABIN_SD_B
)_CL
   PUI: JSPX96IM0794K

   GMT _____:_____:_____ (HR:MIN:SEC)

2. VERIFY SWITCH 18 POSN (CABIN SD B) - CL
   ENG: PIB_B2 120V_L SW18 POWER STATUS
   PUI: JSDC00FCPK2HJ

RELEASED - Printed documents may be obsolete; validate prior to use.

SECTION IV - OPERATION INSTRUCTIONS

SEQ/STEP	CMD	RESP	DESCRIPTION	VERIF.
102-180	KECL	MS1	PCS JPM:ECLSS:SD_B JPM CABIN SMOKE DETECTOR B 'BIT THRESHOLD' 1. CMD: BIT THRESHOLD PARAMETER 1: BIT OBS HI RAIL: -3.60 PARAMETER 2: BIT LED SCTR LOW RAIL: 2.12 PARAMETER 3: BIT LED SCTR HI RAIL: 4.12 PARAMETER 4: BIT QUIET SCTR HI RAIL: 0.50 SET OPS: JPM_ECL_FDS_CABIN_SD_B_BIT_THOLD_SET_TMPLT PUI: JSEF96IM0037K GMT _____:_____:_____ (HR:MIN:SEC) 2. BIT OBS HI RAIL - -3.60 +/- 0.08 VOLTS ENG: PM_CABIN_SD_B BIT OBSCURATION HIGH RAIL PUI: JSDC00FCE72BV 3. BIT LED SCTR LOW RAIL – 2.12 +/- 0.08 VOLTS ENG: PM_CABIN_SD_B IT LED SCATTER LOW RAIL PUI: JSDC00FCE72CV 4. BIT LED SCTR HI RAIL – 4.12 +/- 0.08 VOLTS ENG: PM_CABIN_SD_B BIT LED SCATTER HIGH RAIL PUI: JSDC00FCE72DV	

RELEASED - Printed documents may be obsolete; validate prior to use.

SECTION IV - OPERATION INSTRUCTIONS

SEQ/STEP	CMD	RESP	DESCRIPTION	VERIF.

NOTE

THE FOLLOWING COMMAND CHANGES SIX THRESHOLD DEFAULT VALUES FOR THE SMOKE DETECTOR. ONLY THE “OBSCURATION THRESHOLD” AND THE “SCATTER THRESHOLD” CAN BE CONFIRMED. SINCE THESE TWO DEFAULT VALUES ARE NOT CHANGED, TO CONFIRM THE COMMAND IS RECEIVED SUCCESSFULLY, THE “OBSCURATION THRESHOLD” WILL BE TEMPORARILY UPDATED TO 0.00 VOLTS, AND THEN RESET TO THE DEFAULT VALUE OF 0.50 VOLTS.

102-181 KECL MS1 PCS
JPM:ECLSS:SD_B
JPM CABIN SMOKE DETECTOR B

‘THRESHOLD’

1. CMD: THRESHOLD
   PARAMETER 1: OBS THRESHOLD: 0.00
   PARAMETER 2: OBS HI RAIL: 0.00
   PARAMETER 3: OBS LOW RAIL: 0.00
   PARAMETER 4: SCTR THRESHOLD: 0.00
   PARAMETER 5: SCTR LOW RAIL: 0.00
   PARAMETER 6: LENS CONTAM LOW LIMI: 0.00
   SET
   OPS:
   JPM_ECL_FDS_CABIN_SD_B_THOLD_SET_TMPLT
   PUI: JSEF96IM0034K

   GMT _____:_____:_____ (HR:MIN:SEC)

2. VERIFY: OBS THRESHOLD – 0.00 +/- 0.08 VOLTS
   ENG: PM_CABIN_SD_B OBSCURATION T/H
   PUI: JSDC00FCE729V

RELEASED - Printed documents may be obsolete; validate prior to use.

SECTION IV - OPERATION INSTRUCTIONS

SEQ/STEP	CMD	RESP	DESCRIPTION	VERIF.
102-182	KECL	MS1	PCS JPM:ECLSS:SD_B JPM CABIN SMOKE DETECTOR B 'THRESHOLD' 1. CMD: THRESHOLD PARAMETER 1: OBS THRESHOLD: 0.50 PARAMETER 2: OBS HI RAIL: 4.60 PARAMETER 3: OBS LOW RAIL: -4.50 PARAMETER 4: SCTR THRESHOLD: 2.00 PARAMETER 5: SCTR LOW RAIL: -0.50 PARAMETER 6: LENS CONTAM LOW LIMI: 0.00 SET OPS: JPM_ECL_FDS_CABIN_SD_B_THOLD_SET_TMPLT PUI: JSEF96IM0034K GMT _____:_____:_____ (HR:MIN:SEC) VERIFY: 2. OBS THRESHOLD – 0.50 +/- 0.08 VOLTS ENG: PM_CABIN_SD_B OBSCURATION T/H PUI: JSDC00FCE729V 3. SCTR THRESHOLD – 2.00 +/- 0.08 VOLTS ENG: PM_CABIN_SD_B SCATTER T/H PUI: JSDC00FCE72AV	

RELEASED - Printed documents may be obsolete; validate prior to use.

SECTION IV - OPERATION INSTRUCTIONS

SEQ/STEP	CMD	RESP	DESCRIPTION	VERIF.
			CHECK CABIN SD B STATUS	
102-183	KECL	MS1	PCS JPM:ECLSS:SD_B JPM CABIN SMOKE DETECTOR B 'ACTIVE BIT' 1. CMD: STATUS RESET OPS: JPM_ECL_FDS_CABIN_SD_B_BIT_STAT_RST PUI: JSEF96IM0035K GMT _____:_____:_____ (HR:MIN:SEC) 2. VERIFY: STATE - INVALID ENG: PM_CABIN_SD_B BIT STATUS PUI: JSDC00FCE725J	
102-184	KECL	MS1	PCS JPM:ECLSS:SD_B JPM_CABIN_SMOKE DETECTOR B 'ACTIVE BIT' 1. CMD: INITIATE OPS: JPM_ECL_FDS_CABIN_SD_B_BIT_START PUI: JSEF96IM0036K GMT _____:_____:_____ (HR:MIN:SEC) 2. STATE - VALID ENG: PM_CABIN_SD_B BIT STATUS PUI: JSDC00FCE725J 3. FAILURE – 'BLANK' ENG: PM_CABIN_SD_B BIT RESULT PUI: JSDC00FCE724J	

RELEASED - Printed documents may be obsolete; validate prior to use.

SECTION IV - OPERATION INSTRUCTIONS

SEQ/STEP	CMD	RESP	DESCRIPTION	VERIF.
102-185	KECL	MS1	PCS JPM:ECLSS:SD_B JPM_CABIN_SMOKE DETECTOR B 'MONITORING' 1. CMD: ENABLE OPS: JPM_ECL_FDS_CABIN_SD_B_MONITOR_START PUI: JSEF96IM0031K GMT _____:_____:_____ (HR:MIN:SEC) 2. VERIFY: STATUS - VALID ENG: PM_CABIN_SD_B MONITOR STATUS PUI: JSDC00FCE722J ~OMRSD A3000MI.100-A (ECLSS CABIN SMOKE DETECTOR B)	

RELEASED - Printed documents may be obsolete; validate prior to use.

SECTION IV - OPERATION INSTRUCTIONS

SEQ/STEP	CMD	RESP	DESCRIPTION	VERIF.
			CONFIGURE JEM IMV-B VALVE AND FAN	
102-186	KECL	MS1	PCS JPM:ECLSS:IMV STBD AFT VLV:PIB B1 SWITCH DETAILS PIB B1 SWITCH DETAILS '120V/0.5A' 1. CMD: SWITCH 1 (JPM IMV STBD AFT VLV B) - CLOSE PUI: JSPX96IM0673K OPS: JPM_EPS_PIB_B1_120V_L_SW01_(JPM IMV STBDAFTVLVB)_CL GMT _____:_____:_____ (HR:MIN:SEC) 2. VERIFY: SWITCH 1 (JPM IMV STBD AFT VLV B) POSN – CL ENG: PIB_B1 120V_L SW1 POWER STATUS PUI: JSDC00FCPE20J	

RELEASED - Printed documents may be obsolete; validate prior to use.

SECTION IV - OPERATION INSTRUCTIONS

SEQ/STEP	CMD	RESP	DESCRIPTION	VERIF.

NOTE

AFTER JPM IMV STBD AFT VALVE POSITION ENABLE COMMAND EXECUTION, VALVE POSITION (CURRENT) INDICATES FOR A SHORT TIME WHILE VALVE IS POWERED ON AND ENABLED. THEN VALVE IS AUTOMATICALLY UNPOWERED.

102-187 KECL MS1 PCS
JPM:ECLSS:IMV STBD AFT VLV
JPM IMV VALVES

'IMV STBD AFT VALVE'

1. CMD: POSITION - OPEN
   PUI: JSET96IM0011K
   OPS: JPM_ECL_IMV_STBD_AFT_VLV_B_POSN_OP

   GMT _____:_____:_____ (HR:MIN:SEC)

2. CMD: VALVE ENABLE - ENABLE
   OPS: JPM_ECL_IMV_STBD_AFT_VLV_B_ENA
   PUI: JSET96IM0013K

   GMT _____:_____:_____ (HR:MIN:SEC)

NOTE

VALVE TRANSITION MAY TAKE APPROXIMATELY 35 SECONDS.

VERIFY:

3. VALVE POSITION (STACK) – OPEN
   ENG: JEM_IMV_RETURN_VALVE STACK POSTN
   PUI: JSDC00SWE351J

4. SWITCH 1 POSN – OP
   ENG: PIB_B1 120V_L SW1 POWER STATUS
   PUI: JSDC00FCPE20J

~OMRSD A3000MI.100-A (ECLSS IMV VALVE B)

RELEASED - Printed documents may be obsolete; validate prior to use.

SECTION IV - OPERATION INSTRUCTIONS

SEQ/STEP	CMD	RESP	DESCRIPTION	VERIF.
			NOTE PERFORM THIS STEP IF THE CAP OF THE IMV STBD FWD VALVE IS INSTALLED.	
102-188	KECL	KFWT DKQN	REMOVE FLIGHT CAP FROM STBD FWD IMV VALVE. BAG AND TAG CAP TO PRESERVE CLEANLINESS.	
				TNW:_____
				NOT PERFORMED:_____
			NOTE WHEN THIS STEP EXECUTES, PDB_EPS2 RPC4 TRIP STATUS INDICATES 'ABNORMAL' ONLY FOR A MOMENT AND PDB_EPS2 HEALTH STATUS SUMMARY INDICATES 'ERROR'.	
102-189	KECL	MS1	PCS JPM:ECLSS:IMV STBD AFT FAN:PDB EPS2 RPC DETAILS PDB EPS2 RPC DETAILS 'PDB EPS2' 1. CMD: RPC 4 (IMV RETURN FAN) - CLOSE PUI: JSPX96IM0565K OPS: JPM_EPS_PDB_B_EPS2_RPC04_(JPM_IMV_STBD_AFT_FAN_B)_CL GMT _____:_____:_____ (HR:MIN:SEC) 2. VERIFY: RPC 4 (IMV RETURN FAN) POSN – CL ENG: PDB_EPS2 RPC4 POWER STATUS PUI: JSDC00FCP80FJ ~OMRSD A3000ME.300-B (PARTIAL EPS CHANNELIZATION – IMV RTN FAN)	

RELEASED - Printed documents may be obsolete; validate prior to use.

SECTION IV - OPERATION INSTRUCTIONS

SEQ/STEP	CMD	RESP	DESCRIPTION	VERIF.
102-190	KECL	MS1	PCS JPM:ECLSS:IMV STBD AFT FAN JPM IMV FANS 'IMV STBD AFT FAN' RECORD: SPEED - _____ RPM (BD) ENG: JEM_IMV_RETURN_FAN REV PUI: JSDC00FCE100R	
102-191	KECL	MS1	PCS JEM:JPM_ECLSS:IMV STBD AFT FAN JPM IMV FANS 'IMV STBD AFT FAN' 1. CMD: ON PUI: JSET96IM0000K OPS: JPM_ECL_IMV_STBD_AFT_FAN_B_START GMT _____:_____:_____ (HR:MIN:SEC) (RECORD IN APPENDIX G) 2. VERIFY/RECORD: SPEED – _____RPM (7745 – 9750 RPM) ENG: JEM_IMV_RETURN_FAN REV PUI: JSDC00FCE100R ~OMRSD A3000MI.100-A (ECLSS IMV FAN SPEED B)	
102-192	KECL	SSFE	CES MATE LOAD AND RUN MATE SCRIPT MEIT3_MATE_CMDS INDEX: 0X005F CMD: JEM IMV RETURN FAN ROTATIONAL RATE OUT OF LIMIT EVENT MONITORING - ENABLE PUI: JSDD96IM0227K OPS: JPM_CDH_ACTIVE_JCP_EVENT_DET_ENA_TMPLT EVENT ID: 455 (JEM IMV RETURN FAN ROTATIONAL RATE OUT OF LIMIT) GMT _____:_____:_____ (HR:MIN:SEC)	

RELEASED - Printed documents may be obsolete; validate prior to use.

SECTION IV - OPERATION INSTRUCTIONS

SEQ/STEP	CMD	RESP	DESCRIPTION	VERIF.
102-193	KECL		TCMS:B-STRING IMV RETURN FAN VERIFY: ROTATION RATE OUT OF LIMIT EVENT FLAG – ENABLE ENG: EVENT INHIBIT FLAG(JEM IMV RETURN FAN ROTATIONAL RATE OUT OF LIMIT) PUI: JSDC00SWZ38BJ	
102-194	KEPS	SSFE	CES MATE LOAD AND RUN MATE SCRIPT MEIT3_MATE_CMDS INDEX: 0X0090 CMD: PDB_EPS2_RST_BIT_STAT PUI: JSPX96IM0585K OPS: JPM_EPS_PDB_B_EPS2_BIT_STAT_RST EXECUTE GMT _____:_____:_____ (HR:MIN:SEC)	
102-195	KEPS	MS1	PCS JPM:EPS:PDB EPS 2 ‘PDB EPS2 RPC DETAILS’ ‘PDB EPS2’ VERIFY: HEALTH SUMMARY – BLANK (NORMAL) ENG: PDB_EPS2 HEALTH STATUS SUMMARY PUI: JSDC00FCP800J	

RELEASED - Printed documents may be obsolete; validate prior to use.

SECTION IV - OPERATION INSTRUCTIONS

SEQ/STEP	CMD	RESP	DESCRIPTION	VERIF.

RECONFIGURE THC_B RUN STATUS

102-196 KECL MS1

PCS
JPM:ECLSS:THC B:THC B COMMANDS
JEM THC B COMMANDS

'THC B'

CMD: OPS MODE - HIGH
PUI: JSET96IM0046K
OPS: JPM_ECL_THC_B_OPS_MODE_HI

GMT _____:_____:_____ (HR:MIN:SEC)

NOTE

IT TAKES APPROXIMATELY 95 SECONDS FOR THE THC B TO TRANSFER FROM MANUAL TO HIGH.

VERIFY: OPS MODE – HIGH
ENG: THC_B RUN STATUS
PUI: JSDC00FCEC0XJ

~OMRSD A3000MI.100-A (ECLSS THC B)

102-197 KECL MS1

PCS
JPM:ECLSS:THC B:THC B COMMANDS
JPM THC B COMMANDS

VERIFY/RECORD:

1. FAN SPEED – _____RPM (6469 - 7920 RPM)
   ENG: THC_B CABIN FAN SPEED CURRENT
   PUI: JSDC00FCEC02R

2. THCU HEALTH STAT - NORMAL
   ENG: THC_B CNTLR HEALTH STATUS STACK
   PUI: JSDC00FCEC05J

3. FAN HEALTH STAT - NORMAL
   ENG: THC_B CNTLR HEALTH STATUS STACK
   PUI: JSDC00FCEC06J

4. WS HEALTH STAT - NORMAL
   ENG: THC_B WATER SEPARATOR HEALTH STATUS STACK
   PUI: JSDC00FCEC08J

RELEASED - Printed documents may be obsolete; validate prior to use.

SECTION IV - OPERATION INSTRUCTIONS

SEQ/STEP	CMD	RESP	DESCRIPTION	VERIF.
			5. TCV HEALTH STAT - NORMAL ENG: THC_B TEMP CNTRL VALVE HEALTH STATUS STACK PUI: JSDC00FCEC0AJ	
			6. CHX HEALTH STAT - NORMAL ENG: THC_B CHX HEALTH STATUS STACK PUI: JSDC00FCEC09J	
			7. HEPA FILTER HEALTH STAT - NORMAL ENG: THC_B PARTICLE FILTER HEALTH STATUS STACK PUI: JSDC00FCEC07J	
102-198	KECL		TCMS:THC B	
			1. SENSOR HEALTH STATUS (STACK) – NORMAL ENG: THC_B SENSORS HEALTH STATUS STACK PUI: JSDC00FCEC0BJ	
			2. CABIN SETUP TEMP B _____ DEG C (22.5 DEGREES C) ENG: PM_CABIN_TEMP_SETUP_VALUE_B PUI: JSDC00FCEC1KT	
			ENABLE EVENT DETECTION (THC B)	
102-199	KECL	SSFE	CES MATE LOAD AND RUN MATE SCRIPT MEIT3_MATE_CMDS INDEX: 0X0062	
			CMD: CABIN FAN ROTATIONAL RATE LOW EVENT DETECTION - ENABLE PUI: JSDD96IM0227K OPS: JPM_CDH_ACTIVE_JCP_EVENT_DET_ENA_TMPLT EVENT ID: 515 (THC_B CABIN FAN ROTATIONAL RATE LOW) PUI: JSDC00SWV002K	
			GMT _____:_____:_____ (HR:MIN:SEC)	

RELEASED - Printed documents may be obsolete; validate prior to use.

SECTION IV - OPERATION INSTRUCTIONS

SEQ/STEP	CMD	RESP	DESCRIPTION	VERIF.
102-200	KECL		TCMS:THC-B VERIFY: ROTATIONAL RATE LOW EVENT FLAG – ENABLE ENG: EVENT INHIBIT FLAG(THC_B CABIN FAN ROTATIONAL RATE LOW) PUI: JSDC00SWZ3BOJ **TRANSITION TO 1WCL-B** **ACTIVATE LTL DELTA P SENSOR B**	
102-201	KTCS	SSFE	CES MATE LOAD AND RUN MATE SCRIPT MEIT3_MATE_CMDS INDEX: 0X00AC CMD: PIB B2 15V SW6 – CLOSE PUI: JSPX96IM0789K OPS: JPM_EPS_PIB_B2_15V_SW06_(LTL_EQUIP_B_DP_SNSR_B)_CL GMT _____:_____:_____ (HR:MIN:SEC)	
102-202	KTCS		TCMS VERIFY: PIB B2 15V SW6 POWER STATUS - CL PUI: JSDC00FCPK1TJ ENG: PIB_B2 15V SW6 POWER STATUS **ACTIVATE LTL BYPASS FLOW RATE SENSOR B**	
102-203	KTCS	SSFE	CES MATE LOAD AND RUN MATE SCRIPT MEIT3_MATE_CMDS INDEX: 0X00C5 CMD: PIB B2 120V L SW37 CLOSE PUI: JSTE96IM0234K OPS: JPM_EPS_PIB_B2_120V_L_SW37_(LTLAFTBYPLINEFRSB)_CL GMT _____:_____:_____ (HR:MIN:SEC)	
102-204	KTCS		TCMS VERIFY: PIB_B2 120V_L SW37 POWER STATUS - CL ENG: PIB_B2 120V_L SW37 POWER STATUS PUI: JSDC00FCPK30J	

RELEASED - Printed documents may be obsolete; validate prior to use.

SECTION IV - OPERATION INSTRUCTIONS

SEQ/STEP	CMD	RESP	DESCRIPTION	VERIF.
			CONFIGURE VALVES FOR TRANSITION	
			LTL BYP FCV B	
102-205	KTCS	SSFE	CES MATE LOAD AND RUN MATE SCRIPT MEIT3_MATE_CMDS INDEX: 0X00C3 CMD: PIB B2 120V L SW13 – CLOSE PUI: JSTE96IM0226K OPS: JPM_EPS_PIB_B2_120V_L_SW13_(LTL AFT BYP LINE FCVB)_CL GMT _____:_____:_____ (HR:MIN:SEC)	
102-206	KTCS	MS1	PCS JPM:TCS:JPM ATCS LTL 'JPM ATCS LTL' 'BYPASS FCV B' VERIFY: PIB B2 120V L SW13 POSN - ON PUI: JSDC00FCPK2CJ ENG: PIB_B2 120V_L SW13 POWER STATUS	
102-207	KTCS	MS1	PCS JPM:TCS:JPM ATCS LTL 'JPM ATCS LTL' 'BYPASS FCV B' 1. ENTER: VALVE POSN – 38 DEG 2. CMD: VALVE POSN - SET PUI: JSTE96IM0285K OPS: JPM_ATCS_LTL_BYP_LINE_FCV_B_POSN_SET_TMPLT GMT _____:_____:_____ (HR:MIN:SEC) 3. VERIFY PIB B2 120V L SW13 POSN - OFF PUI: JSDC00FCPK2CJ ENG: PIB_B2 120V_L SW13 POWER STATUS	

RELEASED - Printed documents may be obsolete; validate prior to use.

SECTION IV - OPERATION INSTRUCTIONS

SEQ/STEP	CMD	RESP	DESCRIPTION	VERIF.
			ACTIVATE CHX FLOW RATE SENSOR B	
102-208	KTCS	SSFE	CES MATE LOAD AND RUN MATE SCRIPT MEIT3_MATE_CMDS INDEX: 0X00C4 CMD: PIB B2 120V SW35 CLOSE PUI: JSTE96IM0232K OPS: PIB_B2_120V_L_SW35_CL_(ECLSS/TCS2_FR_SNSR_B) GMT _____:_____:_____ (HR:MIN:SEC)	
102-209	KTCS		TCMS VERIFY: PIB_B2 120V_L SW35 POWER STATUS – CL ENG: PIB_B2 120V_L SW35 POWER STATUS PUI: JSDC00FCPK2YJ	
			CHX FCV B	
102-210	KTCS	SSFE	CES MATE LOAD AND RUN MATE SCRIPT MEIT3_MATE_CMDS INDEX: 0X00C1 CMD: PIB B2 120V L SW11 – CLOSE PUI: JSTE96IM0224K OPS: JPM_EPS_PIB_B2_120V_L_SW11_(LTL_THC B CHX FCV B)_CL GMT _____:_____:_____ (HR:MIN:SEC)	
102-211	KTCS	MS1	PCS JPM:TCS:JPM ATCS LTL ‘JPM ATCS LTL’ ‘THC B CHX FCV’ VERIFY: PIB B2 120V L SW11 POSN - ON PUI: JSDC00FCPK2AJ ENG: PIB_B2 120V_L SW11 POWER STATUS	

RELEASED - Printed documents may be obsolete; validate prior to use.

SECTION IV - OPERATION INSTRUCTIONS

SEQ/STEP	CMD	RESP	DESCRIPTION	VERIF.
102-212	KTCS	MS1	PCS JPM:TCS:JPM ATCS LTL 'JPM ATCS LTL' 'LTL' 'THC B CHX FCV' 1. ENTER: VALVE POSN – 45 DEG 2. CMD: VALVE POSN - SET PUI: JSTE96IM0284K OPS: JPM_ATCS_LTL_THC_B_CHX_FCV_B_POSN_SET_TMPLT GMT _____:_____:_____ (HR:MIN:SEC) 3. VERIFY PIB B2 120V L SW11 POSN - OP PUI: JSDC00FCPK2AJ ENG: PIB_B2 120V_L SW11 POWER STATUS **ACTIVATE AND CONFIGURE TCS LOOP CROSSOVER VALVE B**	
102-213	KTCS	MS1	PCS JEM:JPM EPS:PIB B1 'PIB B1 SWITCH DETAILS' '120V/0.5A' 1. CMD: SWITCH 12 (JLCV B) – CLOSE PUI: JSTE96IM0196K OPS: JPM_EPS_PIB_B1_120V_L_SW12_(JLCV_B)_CL GMT _____:_____:_____ (HR:MIN:SEC) 2. VERIFY: SWITCH 12 (JLCV B) POSN - CL PUI: JSDC00FCPE2BJ ENG: PIB_B1 120V_L SW12 POWER STATUS	
102-214	KTCS	MS1	PCS JPM:TCS:LCA:JPM ATCS LCA ICON 'JPM ATCS LCA' 'TCS MODE' CMD: B1WCL PUI: JSTE96IM0331K OPS: JPM_ATCS_JLCA_TCS_MODE_SEL_TMPLT GMT _____:_____:_____ (HR:MIN:SEC)	

RELEASED - Printed documents may be obsolete; validate prior to use.

SECTION IV - OPERATION INSTRUCTIONS

SEQ/STEP	CMD	RESP	DESCRIPTION	VERIF.

NOTE

MODE TRANSITIONING WILL TAKE APPROXIMATELY 3 MINUTES.

102-215 KTCS MS1 PCS
JPM:TCS:LCA ICON
'JPM ATCS LCA'

'TCS MODE'
VERIFY: TCS MODE - B1WCL
PUI: JSDC00SWZ60IJ
ENG: TCS MODE STATUS

~OMRSD A3000MI.100-A (TCS 3)

SET PUMP SPEED AND VERIFY SYSTEM PARAMETERS

CAUTION

NEVER OPEN TCA-L ACCUMULATOR INLET VALVE (SOV, MV, RV) IN B1WCL CONFIGURATION TO AVOID HARDWARE DAMAGE.

102-216 KTCS MS1 PCS
JPM:TCS:JPM ATCS MTL
'JPM ATCS MTL'

'TCA M' 'PUMP'

1. ENTER: SPEED SET – 6800 RPM

2. CMD: SPEED SET – SET
   PUI: JSTE96IM0323K
   OPS: JPM_ATCS_TCA_M_PUMP_B_SPD_SET_TMPLT

   GMT _____:_____:_____ (HR:MIN:SEC)

RELEASED - Printed documents may be obsolete; validate prior to use.

SECTION IV - OPERATION INSTRUCTIONS

SEQ/STEP CMD RESP DESCRIPTION VERIF.

NOTE

IN THE FOLLOWING STEP, PUMP DIFF PRESS AND TOTAL FLOW SHALL BE VERIFIED BY KTCS AND NASDA ACCORDING TO APPENDIX M FIGURE M-1 (TCA-M) IN APPENDIX M.

102-217 KTCS MS1 PCS
JPM:TCS
'JPM ATCS OVERVIEW'

'TCA'

RECORD/VERIFY THE FOLLOWING POST TRANSITION PARAMETERS:

NOMENCLATURE	ACTUAL VALUE	EXPECTED VALUE	PUI
TCA M PUMP SPEED		6800 +/- 329 RPM	JSDC00FCTC1OR
TCA M MTL TEMP		13-22 DEG C	JSDC00FCTC0UT
TCA M ACCUM WATER VOL 1		0.66-4.7 L	JSDC00FCTC02Q
TCA M ACCUM WATER VOL 2		0.66-4.7 L	JSDC00FCTC03Q
TCA M PUMP DP		IN OPERATIONAL RANGE (REF. FIG M-1) & >20 KPAD	JSDC00FCTC1NP
TCA M PUMP OUT FLOW RATE		IN OPERATIONAL RANGE (REF. FIG M-1)	JSDC00FCTC0VR

~OMRSD A3000MI.100-A (TCS 1)

102-218 KTCS MS1 PCS
TCS:JPM ATCS MTL
'JPM ATCS MTL'

'TCA M' 'PUMP'

VERIFY OPERATION – EXEC
ENG: TCA_M MTL TEMP CNTRL EXECUTING STATUS
PUI: JSDC00FCTC0IJ

~OMRSD A3000MI.100-A (TCS 2)

RELEASED - Printed documents may be obsolete; validate prior to use.

SECTION IV - OPERATION INSTRUCTIONS

SEQ/STEP	CMD	RESP	DESCRIPTION	VERIF.
			VERIFY ATCS LOOP DELTA P	
102-219	KTCS	MS1	PCS JPM:TCS 'JPM ATCS OVERVIEW' 'LOOP' 1. VERIFY: LTL LOOP DP B - _____ (>51.6 KPAD) PUI: JSDC00FCT030P ENG: LTL_DIFF_PRESS_B 2. VERIFY: MTL LOOP DP B - _____ (>51.6 KPAD) PUI: JSDC00FCT010P ENG: MTL_DIFF_PRESS_B	
			VERIFY CHX B FLOWRATE	
102-220	KTCS	MS1	PCS JPM:JPM:TCS:JPM ATCS LTL 'JPM ATCS LTL' 'LTL' 'THC B CHX FCV' VERIFY: THC B CHX FLOW RATE - _____ (> 225 KG/HR) PUI: JSDC00FCT1J0R ENG: THC_B_CHX_FLOW_RATE	
			RECORD LTL BYPASS B FLOW	
102-221	KTCS	MS1	PCS JPM:TCS:JPM ATCS LTL 'JPM ATCS LTL' 'LTL' 'BYPASS FCV B' RECORD: BYPASS FLOWRATE B - _____ KG/HR (BD) PUI: JSDC00FCT1K0R ENG: LTL_BYPASS_FLOW_RATE_B	

RELEASED - Printed documents may be obsolete; validate prior to use.

SECTION IV - OPERATION INSTRUCTIONS

SEQ/STEP	CMD	RESP	DESCRIPTION	VERIF.
			SELECT FAS/LIMIT SET FOR LTL DIFFERENTIAL PRESS	
102-222	KTCS	SSFE	CES MATE: LOAD AND RUN MATE SCRIPT MEIT3_MATE_CMDS INDEX: 0X0055 CMD: LIMIT SET(LTL DIFFERENTIAL PRESSURE LOW(B)) - 1 OPS: JPM_CDH_ACTIVE_JCP_EVENT_LIM_SET_NUM_SEL_TMPLT PUI: JSDD96IM0224K PARAMETER: 502 (LTL DIFFERENTIAL PRESSURE LOW(B)) PARAMETER: 1 GMT _____:_____:_____ (HR:MIN:SEC)	
102-223	KTCS		TCMS VERIFY: LIMIT SET(LTL DIFFERENTIAL PRESSURE LOW(B)) - 1 PUI: JSDC00SWZ2A3U	
			SET JPM CABIN TEMP	
102-224	KECL	MS1	PCS JPM:ECLSS JPM ECLSS ‘CABIN TEMP’ 1. –ENTER: 23.0 DEG C CMD: SET PUI: JSET96IM0064K OPS: JPM_ECL_THC_CABIN_TEMP_SET_TMPLT GMT _____:_____:_____ (HR:MIN:SEC) 2. VERIFY: THC B CABIN TEMP SETPOINT – 23.0 DEG C ENG: PM_CABIN_TEMP_SETUP_VALUE_B PUI: JSDC00FCEC1KT	

RELEASED - Printed documents may be obsolete; validate prior to use.

SECTION IV - OPERATION INSTRUCTIONS

SEQ/STEP	CMD	RESP	DESCRIPTION	VERIF.
102-225	PTC	KEPS DKQM	PERFORM JEM UOP PANEL ACTIVATION PER OMI R2009 SEQUENCE 03 FOR UOP PANEL UOP-B2-AD5 AND UOP-B1-AD2 OPTION B AND OPTION G. REPORT COMPLETE START GMT _____:_____:_____ (DAY:HR:MIN) COMPLETE GMT _____:_____:_____ (DAY:HR:MIN)	NV:_____
102-226	PTC	KCDH DKQM	PERFORM SLT ACTIVATION PER OMI R2009 SEQUENCE 05. REPORT COMPLETE. START GMT _____:_____:_____ (DAY:HR:MIN) COMPLETE GMT _____:_____:_____ (DAY:HR:MIN)	NV:_____
			ACTIVATE RMS CONSOLE	
102-227	PTC	KCTE DKQM	PERFORM RMS CONSOLE ACTIVATION PER R0031V1 SEQUENCE 32 UNTIL ACU IS ENABLED. REPORT COMPLETE. START GMT _____:_____:_____ (DAY:HR:MIN) COMPLETE GMT _____:_____:_____ (DAY:HR:MIN)	NV:_____

RELEASED - Printed documents may be obsolete; validate prior to use.

SECTION IV - OPERATION INSTRUCTIONS

SEQ/STEP	CMD	RESP	DESCRIPTION	VERIF.
			PERFORM EPS MEASUREMENTS	
			NOTE QUIET TIME IS REQUIRED DURING CONDUCTED EMISSIONS/VOLTAGE RIPPLE AND POWER QUALITY MEASUREMENTS.	
102-228	PTC	KEPS DKQM	PERFORM POWER QUALITY AND EME MEASUREMENTS FOR NODE2/JEM LOAD CONFIGURATION 3 PER EPS B-STRING POWER QUALITY AND EME R0031V2 SEQUENCE 105 TASK III. REPORT COMPLETION. START GMT _____:_____:_____ (DAY:HR:MIN) COMPLETE GMT _____:_____:_____ (DAY:HR:MIN)	NV:_____
102-229	KEPS	PTC	OK TO PROCEED WITH SEQUENCE	
102-230	PTC	KCTE DKQM	RESUME RMS CONSOLE ACTIVATION PER R0031V1 SEQUENCE 32 FOR TV1, TV2 AND CCP. REPORT COMPLETE. START GMT _____:_____:_____ (DAY:HR:MIN) COMPLETE GMT _____:_____:_____ (DAY:HR:MIN)	NV:_____
			PERFORM EPS MEASUREMENTS	
102-231	PTC	KEPS DKQM	PERFORM POWER QUALITY AND EME MEASUREMENTS FOR NODE2/JEM LOAD CONFIGURATION 4 PER EPS B-STRING POWER QUALITY AND EME R0031V2 SEQUENCE 105 TASK IV. REPORT COMPLETION. START GMT _____:_____:_____ (DAY:HR:MIN) COMPLETE GMT _____:_____:_____ (DAY:HR:MIN)	NV:_____
102-232	KEPS	PTC	OK TO PROCEED WITH SEQUENCE	

RELEASED - Printed documents may be obsolete; validate prior to use.

SECTION IV - OPERATION INSTRUCTIONS

SEQ/STEP	CMD	RESP	DESCRIPTION	VERIF.
			DEACTIVATE RMS CONSOLE	
			NOTE PERFORM THE FOLLOWING STEP IF RMS CONSOLE IS NOT REQUIRED.	
102-233	PTC	KCTE DKQM	PERFORM RMS CONSOLE DEACTIVATION PER R0031V1 SEQUENCE 33. REPORT COMPLETE. START GMT _____:_____:_____ (DAY:HR:MIN) COMPLETE GMT _____:_____:_____ (DAY:HR:MIN)	NV:_____ NOT PERFORMED:_____
102-234	PTC	KEPS	PERFORM LOAD DEACTIVATION STEPS FOR THE FOLLOWING: GLA'S, ATU(B), UOP-B1-AD2 AND VIDEO SYSTEM(CVIU_B, VCU_B, AND CPB_B) PER SEQUENCE 105 COMPLETE GMT _____:_____:_____ (DAY:HR:MIN)	
102-235	PTC	KCDH DKQM	PERFORM FLIGHT PCS ACTIVATION PER OMI R2009 SEQUENCE 08. REPORT COMPLETE. START GMT _____:_____:_____ (DAY:HR:MIN) COMPLETE GMT _____:_____:_____ (DAY:HR:MIN)	NV:_____
102-236	TIE PTC 052	PTC DKQM	JEM B STRING ACTIVATION (JCP-B PRIMARY) COMPLETE. GMT _____:_____:_____ (DAY:HR:MIN)	NV:_____

RELEASED - Printed documents may be obsolete; validate prior to use.

SECTION IV - OPERATION INSTRUCTIONS

SEQ/STEP	CMD	RESP	DESCRIPTION	VERIF.
103-000			**NODE 2 B STRING PARTIAL DEACTIVATION**	
103-001	PTC	DKQM	RECORD THE FOLLOWING INFORMATION: SEQ/STEP THAT CALLED THIS SETUP _____ GMT _____:_____:_____ (DAY:HR:MIN)	
				NV:_____
103-002	KTCN	MS1	PCS: NODE 2:TCS:LTL SFCA NODE2 LTL SFCA COMMANDS 'LTL SFCA' CONFIGURE THE FOLLOWING NODE 2 LTL ITCS COMPONENT PRIOR TO REMOVING POWER TO THE REQUIRED LTL ITCS COMPONENTS: 1. CMD: CLC - INHIBIT PUI: N2DS24SM6301K GMT _____:_____:_____ (HR:MIN:SEC) 2. VERIFY: CLC – INHIBITED (1) PUI: N2DS24MD0097J	

RELEASED - Printed documents may be obsolete; validate prior to use.

SECTION IV - OPERATION INSTRUCTIONS

SEQ/STEP	CMD	RESP	DESCRIPTION	VERIF.

NOTE

REMOVE ELECTRICAL POWER FROM THE FOLLOWING NODE 2 LTL ITCS COMPONENTS PRIOR TO DDCU DEACTIVATION

103-003 KTCN MS1

PCS
NODE 2:TCS:LTL PPA: NODE2
LTL NIA COMMANDS: RPCM N2ZEN_2B3A_A RPC-2

RPCM N2ZEN_2B3A_A RPC-2

'N2 NIA LTL VENT VALVE PWR'

1. CMD: RPC POSITION – OPEN
   PUI: LAPR96IM2419K

   GMT _____:_____:_____ (HR:MIN:SEC)

2. VERIFY: RPC POSITION : OPEN (0)
   PUI: N2PN37FC1017J

103-004 KTCN MS1

PCS
NODE 2: TCS:LTL PPA: NODE2
LTL NIA COMMANDS: RPCM N2ZEN-2B3A-A RPC-15

'RPCM N2ZEN-2B3A-A RPC-15'

'N2 NIA LTL ISOLATION VALVE PWR'

1. CMD: RPC POSITION – OPEN
   PUI: LAPR96IM2432K

   GMT _____:_____:_____ (HR:MIN:SEC)

2. VERIFY: PRC POSITION – OPEN (0)
   PUI: N2PN37FC1030J

RELEASED - Printed documents may be obsolete; validate prior to use.

SECTION IV - OPERATION INSTRUCTIONS

SEQ/STEP	CMD	RESP	DESCRIPTION	VERIF.
103-005	KTCN	MS1	PCS NODE 2: TCS:LTL PPA: NODE2 LTL SFCA: RPCM N2ZEN-2B3A-A RPC-16 'RPCM N2ZEN-2B3A-A RPC-16' 'N2 SFCA LTL FLOW CONTROL VALVE PWR' 1. CMD: RPC POSITION – OPEN PUI: LAPR96IM2433K GMT _____:_____:_____ (HR:MIN:SEC) 2. VERIFY: RPC POSITION – OPEN (0) PUI: N2PN37FC1031J	
103-006	KTCN	MS1	PCS NODE 2:TCS 'PPA LTL' VERIFY STABILITY/CONFIGURATION OF THE FOLLOWING NODE 2 ITCS COMPONENTS PRIOR TO DDCU(S) DEACTIVATION: 1. PUMP IN PRESS, KPA :LTL PPA INLET PRESSURE: 166.5 – 193.0 KPA (24.0 – 28.0 PSIA) PUI: N2TI05SR0101P RECORD LTL PPA INLET PRESSURE: _____ KPA 2. PUMP DP, KPA : (179.3 – 255.1) KPA (26.0 – 37.0) PSID PUI: N2TI05SR0401P RECORD LTL PPA DELTA PRESSURE: _____ KPA 3. AVG ACCUM QTY, %: LESS THAN (<) 85.0% PUI: N2DS24MD0081Q RECORD LTL PPA AVG ACCUMULATOR QTY: _____% 'SFCA LTL' 4. MOD VLV DP,KPA : 96.5 – 110.3 KPA (14.0 – 16.0 PSID) PUI: N2TL04SR0001P RECORD LTL SFCA FCV DP: _____ KPA	

RELEASED - Printed documents may be obsolete; validate prior to use.

SECTION IV - OPERATION INSTRUCTIONS

SEQ/STEP	CMD	RESP	DESCRIPTION	VERIF.

DDCU N2ZEN-3A CONVERTER DEACTIVATION

> **CAUTION**
>
> IF FOLLOWING TWO STEPS INDICATE ORU HEALTH 'NOT OK' RPCM EEPROM REFRESH STEPS MAY BE REQUIRED TO PREVENT CORRUPTION OF THE SRAM.

103-007	KEPS	MS1	VERIFY HEALTH OF NODE 2 RPCM N2ZEN-2B3A-A PCS: HOME / NODE 2 / EPS ICON / RPCM N22B3A A / FIRMWARE	
			1. VERIFY POWER ON RESET - <BLANK>	N2PN37FC1005J
			2. VERIFY ORU HEALTH - OK	N2PN37FC1006J
103-008	KEPS	MS1	VERIFY HEALTH OF NODE 2 RPCM N2ZEN-2B3A-B PCS: HOME / NODE 2 / EPS ICON / RPCM N22B3A B / FIRMWARE	
			1. VERIFY POWER ON RESET - <BLANK>	N2PN38FC1005J
			2. VERIFY ORU HEALTH - OK	N2PN38FC1006J
103-009	KCDH	MS1	INHIBIT RT FDIR FOR RPCM N2ZEN-2B3A-A PCS: HOME / C&DH ICON / PRIMARY INT MDM / LB SEPS N2 23 / RT STATUS 'RT FDIR STATUS'	
			1. **CMD** 13 RPCM N22B3A_A INHIBIT FDIR **EXECUTE**	LADD96IM0800K
			2. VERIFY 13 RPCM N22B3A_A FDIR STATUS – INH	LADP08MDC344J

RELEASED - Printed documents may be obsolete; validate prior to use.

SECTION IV - OPERATION INSTRUCTIONS

SEQ/STEP	CMD	RESP	DESCRIPTION	VERIF.
103-010	KCDH	MS1	INHIBIT RT I/O COMM FOR RPCM N2ZEN-2B3A-A	
			PCS: HOME / C&DH ICON / PRIMARY INT MDM / LB SEPS N2 23 / RT STATUS	
			'RT STATUS'	
			1. **CMD** 13 RPCM N22B3A_A INHIBIT **EXECUTE**	LADP08MD0809K
			2. VERIFY 13 RPCM N22B3A_A RT STATUS – INH	LADP08MDC373J
103-011	KCDH	MS1	INHIBIT RT FDIR FOR RPCM N2ZEN-2B3A-B	
			PCS: HOME / C&DH ICON / PRIMARY PMCU MDM / LB EPS N2 23 / RT STATUS	
			'RT FDIR STATUS'	
			1. **CMD** 16 RPCM N22B3A_B INHIBIT FDIR **EXECUTE**	LADD96IM0832K
			2. VERIFY 16 RPCM N22B3A_B FDIR STATUS– INH	LADP13MD2452J
103-012	KCDH	SSFE	REMOVE RPCM N2ZEN-2B3A-B FROM PMCU EXISTENCE	
			CES MATE LOAD AND EXECUTE THE FOLLOWING SCRIPT:	
			SCRIPT NAME: **NODE2_MATE_CMDS.O** CMD INDEX: **8** PUI NAME: USPZ20MDC024L DESCRIPTION: PRIMARY PMCU DATA LOAD / ORU EXISTENCE PPL **VERSION 1008**	
			GMT _____:_____:_____ (HR:MIN:SEC)	
				NV:_____
103-013	KCDH	KFSW	VERIFY PMCU EXISTENCE TABLE PPL LOAD	
			PCS OR TCMS PRIM_PMCA_ORU_EXIST_STATES_SET_PPL VERSION ID = **1008**	LADP13MD2638U

RELEASED - Printed documents may be obsolete; validate prior to use.

SECTION IV - OPERATION INSTRUCTIONS

SEQ/STEP	CMD	RESP	DESCRIPTION	VERIF.
			DDCU N2ZEN-3A CONVERTER DEACTIVATION	
103-014	KEPS	MS1	PCS ISS HOMEPAGE:NODE 2:EPS:DDCU N2O3A:CONVERTER	
			'DDCU N2O3A CONVERTER'	
			1. CMD: CONVERTER OFF / OFF	LAPC96IM0028K
			GMT _____:_____:_____ (HR:MIN:SEC)	
103-015	KEPS	MS1	PCS ISS HOMEPAGE:NODE 2:EPS:DDCU N2O3A	
			RECORD/VERIFY:	
			CONVERTER STATUS = _____ (OFF)	N2PC18FC0123J
			INPUT VOLTAGE = _____ (BD)	N2PC18FC0420V
			OUTPUT VOLTAGE = _____ (0 +/- 3 VDC)	N2PC18FC0421V
			OUTPUT CURRENT = _____ (0 +/- 3.75 AMPS)	N2PC18FC0419C
			TEMP = _____ DEG C (BD)	N2PC18FC0415T
			PWR SUPPLY TEMP = _____ DEG C (BD)	N2PC18FC0416T
			BASEPLATE TEMP = _____ DEG C (BD)	N2PC18FC0417T
				NV:_____
			DDCU N2ZEN-2B CONVERTER DEACTIVATION	
103-016	KEPS	MS1	PCS ISS HOMEPAGE:NODE 2:EPS:DDCU N2O2B:CONVERTER	
			'DDCU N2O2B CONVERTER'	
			1. CMD: CONVERTER OFF / OFF	LAPC96IM0028K
			GMT _____:_____:_____ (HR:MIN:SEC)	

RELEASED - Printed documents may be obsolete; validate prior to use.

SECTION IV - OPERATION INSTRUCTIONS

SEQ/STEP	CMD	RESP	DESCRIPTION	VERIF.
103-017	KEPS	MS1	PCS ISS HOMEPAGE:NODE 2:EPS:DDCU N2O2B RECORD/VERIFY: CONVERTER STATUS = _____ (OFF) INPUT VOLTAGE = _____ (BD) OUTPUT VOLTAGE = _____ (0 +/- 3 VDC) OUTPUT CURRENT = _____ (0 +/- 3.75 AMPS)	 N2PC17FC0123J N2PC17FC0420V N2PC17FC0421V N2PC17FC0419C
				NV:_____
103-018	KTCN	MS1	PCS: NODE 2: TCS 'PPA LTL' VERIFY STABILITY/CONFIGURATION OF THE FOLLOWING NODE 2 ITCS COMPONENTS AFTER DDCU(S) DEACTIVATION: 1. PUMP IN PRESS, KPA :LTL PPA INLET PRESSURE: 165.5 – 193.0 KPA(24.0 – 28.0 PSIA) PUI: N2TI05SR0101P RECORD PPA INLET PRESSURE: _____ PPA 2. PUMP DP, KPA : (179.3 – 255.1) KPA (26.0 – 37.0) PSID PUI: N2TI05SR0401P RECORD LTL PPA DELTA PRESSURE:_____KPA 3. AVG ACCUM QTY, %: LESS THAN (<) 85.0 % PUI: N2DS24MD0081Q RECORD LTL PPA AVG ACCUMULATOR QTY: _____% 'SFCA LTL' 4. MOD VLV DP,KPA : 96.5 – 110.3 KPA (14.0 – 16.0 PSID) PUI: N2TL04SR0001P RECORD LTL SFCA FCV DP: _____KPA				

RELEASED - Printed documents may be obsolete; validate prior to use.

SECTION IV - OPERATION INSTRUCTIONS

SEQ/STEP	CMD	RESP	DESCRIPTION	VERIF.
103-019	TIE PTC 052	PTC DKQM	NODE 2 B STRING PARTIAL DEACTIVATION COMPLETE. GMT _____:_____:_____ (DAY:HR:MIN)	
				NV:_____

RELEASED - Printed documents may be obsolete; validate prior to use.

SECTION IV - OPERATION INSTRUCTIONS

SEQ/STEP	CMD	RESP	DESCRIPTION	VERIF.
104-000			**NODE 2 B STRING RE-ACTIVATION**	
104-001	PTC	DKQM	RECORD THE FOLLOWING INFORMATION:	
			SEQ/STEP THAT CALLED THIS SETUP _____	
			GMT _____:_____:_____ (DAY:HR:MIN)	
				NV:_____
			NOTE	
			THIS SEQUENCE WILL BE PERFORMED IN PARALLEL WITH JEM B STRING ACTIVATION AFTER CONVERTER ACTIVATION OF DDCU N2ZEN-3A & N2ZEN-2B ARE COMPLETE.	
104-002	KCDH	SSFE	ADD RPCM N2ZEN-2B3A-B TO PMCU EXISTENCE	
			CES MATE LOAD AND EXECUTE THE FOLLOWING SCRIPT:	
			SCRIPT NAME: **NODE2_MATE_CMDS.O** CMD INDEX: **9** PUI NAME: USPZ20MDC024L DESCRIPTION: PRIMARY PMCU DATA LOAD / ORU EXISTENCE PPL **VERSION 1009**	
			GMT _____:_____:_____ (HR:MIN:SEC)	
				NV:_____
104-003	KCDH	KFSW	VERIFY PMCU EXISTENCE TABLE PPL LOAD	
			PCS OR TCMS PRIM_PMCA_ORU_EXIST_STATES_SET_PPL VERSION ID = **1009**	LADP13MD2638U

RELEASED - Printed documents may be obsolete; validate prior to use.

SECTION IV - OPERATION INSTRUCTIONS

SEQ/STEP	CMD	RESP	DESCRIPTION	VERIF.
104-004	KCDH	MS1	VERIFY RT I/O COMM FOR RPCM N2ZEN-2B3A-B	
			PCS: HOME / C&DH ICON / PRIMARY PMCU MDM / LB EPS N2 23 / RT STATUS	
			'RT FAILED STATUS'	
			VERIFY	
			1. 16 RPCM N22B3A_B RT FAILED STATUS - <BLANK>	LADP13MD2451J
			2. 16 RPCM N22B3A_B RT COMM FAILED STATUS - <BLANK>	LADP13MD2450J
104-005	KCDH	MS1	VERIFY INTEGRATION COUNTER RPCM N2ZEN-2B3A-B	
			PCS: HOME/NODE 2/EPS ICON/RPCM N22B3A B	
			VERIFY INTEGRATION COUNTER – INCREMENTING	N2PN38FC0617U
104-006	KCDH	MS1	ENABLE RT FDIR FOR RPCM N2ZEN-2B3A-B	
			PCS: HOME / C&DH ICON / PRIMARY PMCU MDM / LB EPS N2 23 / RT STATUS	
			'RT FDIR STATUS'	
			1. **CMD** 16 RPCM N22B3A_B ENABLE FDIR **EXECUTE**	LADD96IM0834K
			2. VERIFY 16 RPCM N22B3A_B FDIR STATUS–ENA	LADP13MD2452J
104-007	KEPS	MS1	EXECUTE COMMON CLEAR TO NODE 2 RPCM N22B3A B PCS: HOME / NODE 2 / EPS ICON / RPCM N22B3A B / FIRMWARE	
			1. **CMD** COMMON CLEAR	LAPR96IM0006K
			2. VERIFY POWER ON RESET - <BLANK>	N2PN38FC1005J
			3. VERIFY ORU HEALTH - OK	N2PN38FC1006J
104-008	KCDH	MS1	ENABLE RT I/O COMM FOR RPCM N2ZEN-2B3A-A	
			PCS: HOME / C&DH ICON / PRIMARY INT MDM / LB SEPS N2 23 / RT STATUS	
			'RT STATUS'	
			1. **CMD** 13 RPCM N22B3A_A ENABLE **EXECUTE**	LADD96IM0808K
			2. VERIFY 13 RPCM N22B3A_A RT STATUS -ENA	LADP08MDC373J

RELEASED - Printed documents may be obsolete; validate prior to use.

SECTION IV - OPERATION INSTRUCTIONS

SEQ/STEP	CMD	RESP	DESCRIPTION	VERIF.
104-009	KCDH	MS1	VERIFY INTEGRATION COUNTER RPCM N2ZEN-2B3A-A	
			PCS:HOME/NODE 2/EPS ICON/RPCM N22B3A A	
			VERIFY INTEGRATION COUNTER – INCREMENTING	N2PN37FC0617U
104-010	KCDH	MS1	ENABLE RT FDIR FOR RPCM N2ZEN-2B3A-A	
			PCS: HOME / C&DH ICON / PRIMARY INT MDM / LB SEPS N2 23 / RT STATUS	
			'RT FDIR STATUS'	
			1. **CMD** 13 RPCM N22B3A_A ENABLE FDIR **EXECUTE**	LADD96IM0630K
			2. VERIFY 13 RPCM N22B3A_A FDIR STATUS – ENA	LADP08MDC344J
			'RT COMM FAILED STATUS'	
			3. VERIFY 13 RPCM N22B3A_A RT COMM FAILED STATUS' - <BLANK>	LADP08MDC402J

RELEASED - Printed documents may be obsolete; validate prior to use.

SECTION IV - OPERATION INSTRUCTIONS

SEQ/STEP	CMD	RESP	DESCRIPTION	VERIF.
104-011	KEPS	MS1	EXECUTE COMMON CLEAR TO NODE 2 RPCM N22B3A A PCS: HOME / NODE 2 / EPS ICON / RPCM N22B3A A / FIRMWARE	
			1. **CMD** COMMON CLEAR	LAPR96IM2490K
			2. VERIFY POWER ON RESET - <BLANK>	N2PN37FC1005J
			3. VERIFY ORU HEALTH - OK	N2PN37FC1006J
104-012	KTCN	MS1	PCS: NODE 2: TCS: LTL PPA: NODE2 LTL NIA COMMANDS: RPCM N2ZEN_2B3A_A RPC-2 RPCM N2ZEN_2B3A_A RPC-2	
			‘N2 NIA LTL VENT VALVE PWR’	
			1. CMD: RPC POSITION – CLOSE PUI: LAPR96IM2191K	
			GMT _____:_____:_____ (HR:MIN:SEC)	
			2. VERIFY: RPC POSITION : CLOSED PUI: N2PN37FC1017J	
104-013	KTCN	MS1	PCS NODE 2: TCS:LTL PPA: NODE2 LTL NIA COMMANDS: RPCM N2ZEN-2B3A-A RPC-15	
			RPCM N2ZEN-2B3A-A RPC-15	
			‘N2 NIA LTL ISOLATION VALVE PWR’	
			1. CMD: RPC POSITION – CLOSE PUI: LAPR96IM2204K	
			GMT _____:_____:_____ (HR:MIN:SEC)	
			2. VERIFY: PRC POSITION – CLOSED (1) PUI: N2PN37FC1030J	

RELEASED - Printed documents may be obsolete; validate prior to use.

SECTION IV - OPERATION INSTRUCTIONS

SEQ/STEP	CMD	RESP	DESCRIPTION	VERIF.
104-014	KTCN	MS1	PCS NODE 2: TCS: LTL PPA: NODE2 LTL SFCA: RPCM N2ZEN-2B3A-A RPC-16 RPCM N2ZEN-2B3A-A RPC-16 'N2 SFCA LTL FLOW CONTROL VALVE PWR' 1. CMD: RPC POSITION – CLOSE PUI: LAPR96IM2205K EXECUTE GMT _____:_____:_____ (HR:MIN:SEC) 2. VERIFY: RPC POSITION – CLOSED (1) PUI: N2PN37FC1031J **RECONFIGURE NODE 2 LTL ITCS COMPONENTS** **NOTE** THE TERM CLC IS EQUIVALENT TO SFCA INHIBIT STATE.	
104-015	KTCN	MS1	PCS NODE 2: TCS: LTL SFCA NODE2 LTL SFCA COMMANDS 'LTL SFCA' CONFIGURE THE FOLLOWING NODE 2 LTL ITCS COMPONENT: 1. CMD: CLC - ENABLE PUI: N2DS24SM6301K GMT _____:_____:_____ (HR:MIN:SEC) 2. VERIFY: CLC – ENA PUI:N2DS24MD0097J ~OMRSD A3000MI.100-B (PARTIAL TCS)	

RELEASED - Printed documents may be obsolete; validate prior to use.

SECTION IV - OPERATION INSTRUCTIONS

SEQ/STEP	CMD	RESP	DESCRIPTION	VERIF.
104-016	KTCN	MS1	PCS NODE 2: TCS 'PPA LTL' VERIFY STABILITY/CONFIGURATION OF THE FOLLOWING NODE 2 ITCS COMPONENTS: 1. PUMP IN PRESS, KPA :LTL PPA INLET PRESSURE PUI: N2TI05SR0101P RECORD PPA INLET PRESSURE: _____ KPA (165.5 – 193.0 KPA) (24.0 – 28.0 PSIA) 2. PUMP DP, KPA : (179.3 – 255.1) KPA (26.0 – 37.0) PSID PUI: N2TI05SR0401P RECORD LTL PPA DELTA PRESSURE: _____KPA 3. AVG ACCUM QTY, %: LESS THAN (<) 85.0 % PUI: N2DS24MD0081Q RECORD LTL PPA AVG ACCUMULATOR QTY: _____% 'SFCA LTL' 4. MOD VLV DP,KPA : 96.5 – 110.3 KPA (14.0 – 16.0 PSID) PUI: N2TL04SR0001P RECORD LTL SFCA FCV DP: _____KPA ~OMRSD A3000MI.100-B (PARTIAL TCS)	

RELEASED - Printed documents may be obsolete; validate prior to use.

SECTION IV - OPERATION INSTRUCTIONS

SEQ/STEP	CMD	RESP	DESCRIPTION	VERIF.
104-017	KTCN	MS1	PCS NODE 2: TCS:LTL PPA:NODE2 LTL NIA COMMANDS NODE2 LTL NIA COMMANDS VERIFY STABILITY/CONFIGURATION OF THE FOLLOWING NODE 2 ITCS COMPONENTS: 1. LTL ACCUM VENT VLV – CLOSED PUI: N2DS24MD0087J 2. LTL N2 INTRO VLV – CLOSED PUI: N2DS24MD0086J	
104-018	KTCN	MS1	PCS NODE 2:TCS: LTL SOFTWARE NODE2 LTL SOFTWARE COMMAND ‘LTL IATCS’ VERIFY: LEAK RECOVERY AUTO SHUTDOWN – ENA (0) PUI:LADP08MDC282J ~OMRSD A3000MI.100-B (PARTIAL TCS)	
104-019	KTCS	MS1	PCS NODE 2:NODE2:TCS:LTL SOFTWARE NODE2 LTL SOFTWARE COMMANDS ‘LTL IATCS’ VERIFY: SFCA OVERPRESS PROTECTION STATUS – ENA PUI: LADP08MDC248J ~OMRSD A3000MI.100-B (PARTIAL TCS)	
104-020	TIE PTC 052	PTC DKQM	NODE 2 B STRING RE-ACTIVATION COMPLETE. GMT _____:_____:_____ (DAY:HR:MIN)	

NV:_____

RELEASED - Printed documents may be obsolete; validate prior to use.

SECTION IV - OPERATION INSTRUCTIONS

SEQ/STEP	CMD	RESP	DESCRIPTION	VERIF.
105-000			**EPS B STRING POWER QUALITY AND EME**	
105-001	PTC	DKQM	RECORD THE FOLLOWING INFORMATION: GMT _____:_____:_____ (DAY:HR:MIN)	
				NV:_____

NOTE

PRINTOUTS REQUIRED BY THIS SEQUENCE MAYBE PRINTED AT ANY TIME.

TASK I:

105-002 KEPS VERIFY THE FOLLOWING ORU'S ARE ACTIVE:

ELEMENT	ORU'S
NODE2	REQUIRED LOADS ARE AT LEAST 5 OF THE FOLLOWING: NIA LTL VENT VALVE, NIA LTL ISO VALVE, SFCA LTL FLOW CONTROL VALVE, N2-2 MDM, LTL PUMP, LTL CTB 3 WAY MIX VALVE, LTL REG 3 WAY MIX VALVE
JEM PM	REQUIRED LOADS ARE AT LEAST 3 OF THE FOLLOWING: PDB EPS2, PIB (B1), DIU-I (B1), DIU EPS2

105-003 KEPS RECORD ANY ADDITIONAL NODE 2 2B/3A OR JEM B STRING ENERGIZED LOADS NOT LISTED ABOVE.

LOAD	RPCM SWITCH
_____	_____
_____	_____
_____	_____

NOTE

VERIFY XFMR DISCONNECTED FROM CIRCUIT PRIOR TO PERFORMING EME/STEP LOAD TRANSIENT MEASUREMENTS

105-004 KEPS DESE VERIFY PRE-OPERATION SUPPORT SETUP PLRPC SETUP IS COMPLETE.

RELEASED - Printed documents may be obsolete; validate prior to use.

SECTION IV - OPERATION INSTRUCTIONS

SEQ/STEP	CMD	RESP	DESCRIPTION	VERIF.
			NOTE PERFORM NEXT STEP IF PLRPC B IS NOT CONFIGURED FOR POWER QUALITY.	
105-005	KEPS	DESE	NODE 2/JEM PMB BOB PLRPC PREPARE PLRPC B LOGICAL LOAD #1 WITH SINGLE SHOT PULSE MODE OF 26 AMPS AT NODE 2/JEM PMB BOB PER OMI R3008. REPORT COMPLETE. PRIMARY CURRENT: 0 AMPS SECONDARY CURRENT: 26 AMPS PULSE WIDTH: 500 MILLISECONDS RISE/FALL TIME: 20 MICROSECONDS (A=0) NOT PERFORMED:_____	
			EME MEASUREMENTS	
105-006	KEPS	KEME DKQM	PERFORM VOLTAGE RIPPLE MEASUREMENT PER TPS EMC-3418 FOR THE NODE2/JEM PM LOAD CONFIGURATION I START GMT _____:_____:_____ (DAY:HR:MIN) COMPLETE GMT _____:_____:_____ (DAY:HR:MIN) NV:_____ ~OMRSD A3000ME.100-A (JEM PM B V RIPPLE CONFIG 1)	
			STEADY STATE AND NOISE & RIPPLE VOLTAGE	
105-007	KEPS	SDAS	PERFORM POWER QUALITY MEASUREMENTS FOR THE NODE2/JEM PM LOAD CONFIGURATION I. SET THE HIGH SPEED TRANSIENT TO 196,000 SAMPLES PER SECOND, THE PRE-TRIGGER TO 5 MILLISECONDS, AND THE POST-TRIGGER TO 50 MILLISECONDS. 1. DEPRESS MANUAL TRIGGER AND RECORD FILENAME. FILENAME:_____ 2. PRINT THE DATA FOR NODE 2/JEM PMB BOB. ~OMRSD A3000ME.200-A (JEM PM B S-S V CONFIG 1)	

RELEASED - Printed documents may be obsolete; validate prior to use.

SECTION IV - OPERATION INSTRUCTIONS

SEQ/STEP	CMD	RESP	DESCRIPTION	VERIF.
			ON/OFF STEP TRANSIENT	
105-008	KEPS	SDAS	PREPARE TO CAPTURE TRANSIENT DATA ON THE CURRENT FOR NODE 2/JEM PMB BOB. SET TRIGGER LEVEL 2 AMPS ABOVE THE CURRENT PDAS READING FOR NODE 2/JEM PMB BOB. SET THE HIGH SPEED TRANSIENT TO 100,000 SAMPLES PER SECOND.	
105-009	KEPS	DESE	NODE 2/JEM PMB BOB PLRPC ISSUE SINGLE SHOT PULSE ON YOUR MARK WHEN READY. GMT _____:_____:_____ (DAY:HR:MIN)	
105-010	SDAS SQSE	KEPS	CAPTURE COMPLETE. RECORD FILENAME. FILENAME:_____	
105-011	KEPS	SDAS	PRINT DATA AS FOLLOWS: 1. PRINT RISING EDGE DATA FOR MEASUREMENT LOCATION NODE 2/JEM PMB BOB. 2. PRINT FALLING EDGE DATA FOR MEASUREMENT LOCATION NODE 2/JEM PMB BOB. ~OMRSD A3000ME.200-B (JEM PM B TRANS V CONFIG 1)	

RELEASED - Printed documents may be obsolete; validate prior to use.

SECTION IV - OPERATION INSTRUCTIONS

SEQ/STEP	CMD	RESP	DESCRIPTION	VERIF.
105-012	KEPS	PTC	POWER QUALITY AND EME MEASUREMENTS FOR NODE2/JEM PM LOAD CONFIGURATION 1 (TASK I) ARE COMPLETE. COMPLETE GMT _____:_____:_____ (DAY:HR:MIN) **TASK II:**	
105-013	KEPS		VERIFY THE FOLLOWING ORU'S ARE ACTIVE:	

ELEMENT	**ORU'S**
NODE2	REQUIRED LOADS ARE AT LEAST 5 OF THE FOLLOWING: NIA LTL VENT VALVE, NIA LTL ISO VALVE, SFCA LTA FLOW CONTROL VALVE, N2-2 MDM, LTL PUMP, LTL CTB 3 WAY MIX VALVE, LTL REG 3 WAY MIX VALVE
JEM PM	REQUIRED LOADS ARE AT LEAST 3 OF THE FOLLOWING: PDB-I (EPS2), PIB (B1), DIU-I (B1), DIU III (EPS2),AND AT LEAST 8 OF THE FOLLOWING PDB-II (DMS2), JCP B, EDSU,PDB-II (ECLSS/TCS2), TCA M TAC, TCA M PUMP, PDB-I(B1), PIB (B2), DIU-I (B2), DIU-I (B3), PDB-II (B2)

RELEASED - Printed documents may be obsolete; validate prior to use.

SECTION IV - OPERATION INSTRUCTIONS

SEQ/STEP	CMD	RESP	DESCRIPTION	VERIF.
105-014	KEPS		RECORD ANY ADDITIONAL NODE 2 2B/3A OR JEM B STRING ENERGIZED LOADS NOT LISTED ABOVE. LOAD RPCM SWITCH _____ _____ _____ _____ _____ _____	
105-015	KEPS	DESE	NODE 2/JEM PMB BOB VERIFY PLRPC IS CONNECTED TO NODE 2/JEM PMB BOB.	
			NOTE PERFORM NEXT STEP IF PLRPC B IS NOT CONFIGURED FOR POWER QUALITY.	
105-016	KEPS	DESE	NODE 2/JEM PMB BOB PLRPC PREPARE PLRPC LOGICAL LOAD #1 WITH SINGLE SHOT PULSE MODE OF 26 AMPS AT NODE 2/JEM PMB BOB PER OMI R3008. REPORT COMPLETE. PRIMARY CURRENT: 0 AMPS SECONDARY CURRENT: 26 AMPS PULSE WIDTH: 500 MILLISECONDS RISE/FALL TIME: 20 MICROSECONDS (A=0) NOT PERFORMED:_____	
			EME MEASUREMENTS	
105-017	KEPS	KEME DKQM	PERFORM VOLTAGE RIPPLE MEASUREMENT PER TPS EMC-3418 FOR THE NODE2/JEM PM LOAD CONFIGURATION II START GMT _____:_____:_____ (DAY:HR:MIN) COMPLETE GMT _____:_____:_____ (DAY:HR:MIN) NV:_____ ~OMRSD A3000ME.100-B (JEM PM B V RIPPLE CONFIG 2)	

RELEASED - Printed documents may be obsolete; validate prior to use.

SECTION IV - OPERATION INSTRUCTIONS

SEQ/STEP	CMD	RESP	DESCRIPTION	VERIF.
			STEADY STATE AND NOISE & RIPPLE VOLTAGE	
105-018	KEPS	SDAS	PERFORM POWER QUALITY MEASUREMENTS FOR THE NODE2/JEM PM LOAD CONFIGURATION II. SET THE HIGH SPEED TRANSIENT TO 196,000 SAMPLES PER SECOND, THE PRE-TRIGGER TO 5 MILLISECONDS, AND THE POST-TRIGGER TO 50 MILLISECONDS. 1. DEPRESS MANUAL TRIGGER AND RECORD FILENAME. FILENAME:_____ 2. PRINT THE DATA FOR NODE 2/JEM PMB BOB. ~OMRSD A3000ME.200-C (JEM PM B S-S V CONFIG 2)	
			ON/OFF STEP TRANSIENT	
105-019	KEPS	SDAS	PREPARE TO CAPTURE TRANSIENT DATA ON THE CURRENT FOR NODE 2/JEM PMB BOB. SET TRIGGER LEVEL 2 AMPS ABOVE THE CURRENT PDAS READING FOR NODE 2/JEM PMB BOB. SET THE HIGH SPEED TRANSIENT TO 100,000 SAMPLES PER SECOND.	

RELEASED - Printed documents may be obsolete; validate prior to use.

SECTION IV - OPERATION INSTRUCTIONS

SEQ/STEP	CMD	RESP	DESCRIPTION	VERIF.
105-020	KEPS	DESE	NODE 2/JEM PMB BOB PLRPC ISSUE SINGLE SHOT PULSE ON YOUR MARK WHEN READY. GMT _____:_____:_____ (DAY:HR:MIN)	
105-021	SDAS SQSE	KEPS	CAPTURE COMPLETE. RECORD FILENAME. FILENAME:_____	
105-022	KEPS	SDAS	PRINT DATA AS FOLLOWS: 1. PRINT RISING EDGE DATA FOR MEASUREMENT LOCATION NODE 2/JEM PMB BOB. 2. PRINT FALLING EDGE DATA FOR MEASUREMENT LOCATION NODE 2/JEM PMB BOB. ~OMRSD A3000ME.200-D (JEM PM B TRANS V CONFIG 2)	
105-023	KEPS	PTC	POWER QUALITY AND EME MEASUREMENTS FOR NODE2/JEM PM LOAD CONFIGURATION 2 (TASK II) ARE COMPLETE. COMPLETE GMT _____:_____:_____ (DAY:HR:MIN) **TASK III:**	
105-024	KEPS	MS1	PCS JPM:EPS:LIGHTS “JEM LIGHTS” 1. CMD: PDB EPS2 RPC 12 - CLOSE OPS: JPM_EPS_PDB_B_EPS2_RPC12_(GLA_B1_OA1)_CL PUI: JSPX96IM0569K EXECUTE GMT _____:_____:_____ (HR:MIN:SEC) 2. VERIFY: PDB EPS2 RPC 12 RPC POSITION - CL ENG: PDB_EPS2 RPC12 POWER STATUS PUI: JSDC00FCP81CJ ~OMRSD A3000ME.300-B (PARTIAL EPS CHANNELIZATION – GLA B1 OA1)	

RELEASED - Printed documents may be obsolete; validate prior to use.

SECTION IV - OPERATION INSTRUCTIONS

SEQ/STEP	CMD	RESP	DESCRIPTION	VERIF.
105-025	KEPS	MS1	PCS JPM:EPS:LIGHTS “JEM LIGHTS” 1. CMD: PDB EPS2 RPC 13 - CLOSE OPS: JPM_EPS_PDB_B_EPS2_RPC13_(GLA_B3_OA3)_CL PUI: JSPX96IM0570K GMT _____:_____:_____ (HR:MIN:SEC) 2. VERIFY: PDB EPS2 RPC 13 POSITION - CL ENG: PDB_EPS2 RPC13 POWER STATUS PUI: JSDC00FCP81DJ ~OMRSD A3000ME.300-B (PARTIAL EPS CHANNELIZATION – GLA B3 OA3)	
105-026	KEPS	MS1	PCS JPM:EPS:LIGHTS “JEM LIGHTS” 1. CMD: PDB EPS2 RPC 14 - CLOSE OPS: JPM_EPS_PDB_B_EPS2_RPC14_(GLA_B5_OA5)_CL PUI: JSPX96IM0571K GMT _____:_____:_____ (HR:MIN:SEC) 2. VERIFY: PDB EPS2 RPC 14 POSITION - CL ENG: PDB_EPS2 RPC14 POWER STATUS PUI: JSDC00FCP81EJ ~OMRSD A3000ME.300-B (PARTIAL EPS CHANNELIZATION – GLA B5 OA5)	

RELEASED - Printed documents may be obsolete; validate prior to use.

SECTION IV - OPERATION INSTRUCTIONS

SEQ/STEP	CMD	RESP	DESCRIPTION	VERIF.
105-027	KEPS	MS1	PCS JPM:EPS:LIGHTS “JEM LIGHTS” 1. CMD: PDB EPS2 RPC 15 - CLOSE OPS: JPM_EPS_PDB_B_EPS2_RPC15_(GLA_B7_OA7)_CL PUI: JSPX96IM0572K GMT _____:_____:_____ (HR:MIN:SEC) 2. VERIFY: PDB EPS2 RPC 15 POSITION - CL ENG: PDB_EPS2 RPC15 POWER STATUS PUI: JSDC00FCP81FJ ~OMRSD A3000ME.300-B (PARTIAL EPS CHANNELIZATION – GLA B7 OA7)	
105-028	KEPS	MS1	PCS JPM:EPS:LIGHTS “JEM LIGHTS” 1. CMD: PDB B1 RPC 11 - CLOSE OPS: JPM_EPS_PDB_B1_RPC11_(GLA_B2_OF2)_CL PUI: JSPX96IM0484K GMT _____:_____:_____ (HR:MIN:SEC) 2. VERIFY: PDB B1 RPC 11 POSITION - CL ENG: PDB_B1 RPC11 POWER STATUS PUI: JSDC00FCP30TJ ~OMRSD A3000ME.300-D (PARTIAL EPS CHANNELIZATION – GLA B2 OF2)	

RELEASED - Printed documents may be obsolete; validate prior to use.

SECTION IV - OPERATION INSTRUCTIONS

SEQ/STEP	CMD	RESP	DESCRIPTION	VERIF.
105-029	KEPS	MS1	PCS JPM:EPS:LIGHTS “JEM LIGHTS” 1. CMD: PDB B1 RPC 12 - CLOSE OPS: JPM_EPS_PDB_B1_RPC12_(GLA_B4_OF4)_CL PUI: JSPX96IM0485K GMT _____:_____:_____ (HR:MIN:SEC) 2. VERIFY: PDB B1 RPC 12 POSITION - CL ENG: PDB_B1 RPC12 POWER STATUS PUI: JSDC00FCP30UJ ~OMRSD A3000ME.300-D (PARTIAL EPS CHANNELIZATION – GLA B4 OF4)	
105-030	KEPS	MS1	PCS JPM:EPS:LIGHTS “JEM LIGHTS” 1. CMD: PDB B1 RPC 13 - CLOSE OPS: JPM_EPS_PDB_B1_RPC13_(GLA_B6_OF6)_CL PUI: JSPX96IM0486K GMT _____:_____:_____ (HR:MIN:SEC) 2. VERIFY: PDB B1 RPC 13 POSITION - CL ENG: PDB_B1 RPC13 POWER STATUS PUI: JSDC00FCP30VJ ~OMRSD A3000ME.300-D (PARTIAL EPS CHANNELIZATION – GLA B6 OF6)	

RELEASED - Printed documents may be obsolete; validate prior to use.

SECTION IV - OPERATION INSTRUCTIONS

SEQ/STEP	CMD	RESP	DESCRIPTION	VERIF.
105-031	KEPS	MS1	PCS JPM:EPS:LIGHTS “JEM LIGHTS” 1. CMD: PDB B1 RPC 14 - CLOSE OPS: JPM_EPS_PDB_B1_RPC14_(GLA_B8_OF8)_CL PUI: JSPX96IM0487K GMT _____:_____:_____ (HR:MIN:SEC) 2. VERIFY: PDB B1 RPC 14 POSITION - CL ENG: PDB_B1 RPC14 POWER STATUS PUI: JSDC00FCP30WJ ~OMRSD A3000ME.300-D (PARTIAL EPS CHANNELIZATION – GLA B8 OF8) **NOTE** PERFORM NEXT STEP IF GLAS 1B-8B ARE NOT TURNED ON	
105-032	KEPS TLM	TLM MJ1	TURN ON GLAS B1- B8 VIA SRCA (SYSTEM ON/OFF REMOTE CONTROL ASSEMBLY)	

NOT PERFORMED:_____

RELEASED - Printed documents may be obsolete; validate prior to use.

SECTION IV - OPERATION INSTRUCTIONS

SEQ/STEP	CMD	RESP	DESCRIPTION	VERIF.
105-033	KEPS	MS1	PCS JPM:EPS:PDB B1 RPC DETAILS ATU B ACTIVATION (RMS RACK) CMD: PDB B1 RPC 15 - CLOSE OPS: JPM_EPS_PDB_B1_RPC15_(ATU_B_RMS)_CL PUI: JSPX96IM0488K OPS:JPM_EPS_PDB_B1_RPC15_(ATU_B_RMS)_CL EXECUTE GMT _____:_____:_____ (HR:MIN:SEC) VERIFY: PDB B1 RPC 15 POSITION - CL ENG: PDB_B1 RPC15 POWER STATUS PUI: JSDC00FCP30XJ	

RELEASED - Printed documents may be obsolete; validate prior to use.

SECTION IV - OPERATION INSTRUCTIONS

SEQ/STEP	CMD	RESP	DESCRIPTION	VERIF.
105-034	KEPS		VERIFY THE FOLLOWING ORU'S ARE ACTIVE:	

ELEMENT	ORU'S
NODE2	REQUIRED LOADS ARE AT LEAST 5 OF THE FOLLOWING: NIA LTL VENT VALVE, NIA LTL ISO VALVE, SFCA LTA FLOW CONTROL VALVE, N2-MDM, LTL PUMP, LTL CTB 3 WAY MIX VALVE, LTL REG 3 WAY MIX VALVE
JEM PM	REQUIRED LOADS ARE AT LEAST 3 OF THE FOLLOWING: PDB-I (EPS2), PIB (B1), DIU-I (B1), DIU III (EPS2), AND AT LEAST 8 OF THE FOLLOWING: PDB-II (DMS2), JCP B, EDSU,PDB-II (ECLSS/TCS2), TCA M TAC, TCA M PUMP, PDB-I(B1), PIB (B2), DIU-I (B2), DIU-I (B3), PDB-II (B2), AND AT LEAST 11 OF THE FOLLOWING: IMV FAN (B), GLAS (1B – 8B), ATU (RMS RACK), PDB RMS, THC B THCU, THC B CABIN FAN, UOP-B1-AD2

RELEASED - Printed documents may be obsolete; validate prior to use.

SECTION IV - OPERATION INSTRUCTIONS

SEQ/STEP	CMD	RESP	DESCRIPTION	VERIF.
105-035	KEPS		RECORD ANY ADDITIONAL NODE 2 2B/3A OR JEM B STRING ENERGIZED LOADS NOT LISTED ABOVE. LOAD RPCM SWITCH _____ _____ _____ _____ _____ _____	
105-036	KEPS	DESE	NODE 2/JEM PMB BOB VERIFY PLRPC IS CONNECTED TO NODE 2/JEM PMB BOB.	
			NOTE PERFORM NEXT STEP IF PLRPC B IS NOT CONFIGURED FOR POWER QUALITY.	
105-037	KEPS	DESE	NODE 2/JEM PMB BOB PLRPC PREPARE PLRPC B LOGICAL LOAD #1 WITH SINGLE SHOT PULSE MODE OF 26 AMPS AT NODE 2/JEM PMB BOB PER OMI R3008. REPORT COMPLETE. PRIMARY CURRENT: 0 AMPS SECONDARY CURRENT: 26 AMPS PULSE WIDTH: 500 MILLISECONDS RISE/FALL TIME: 20 MICROSECONDS (A=0) NOT PERFORMED:_____	
			EME MEASUREMENTS	
105-038	KEPS	KEME DKQM	PERFORM NOISE CURRENT AND VOLTAGE RIPPLE MEASUREMENTS PER TPS EMC-3418 FOR THE NODE2/JEM PM LOAD CONFIGURATION III START GMT _____:_____:_____ (DAY:HR:MIN) COMPLETE GMT _____:_____:_____ (DAY:HR:MIN) NV:_____ ~OMRSD A3000ME.100-C (JEM PM B NOISE CONFIG 3) ~OMRSD A3000ME.100-D (JEM PM B V RIPPLE CONFIG 3)	

RELEASED - Printed documents may be obsolete; validate prior to use.

SECTION IV - OPERATION INSTRUCTIONS

SEQ/STEP	CMD	RESP	DESCRIPTION	VERIF.
			STEADY STATE AND NOISE & RIPPLE VOLTAGE	
105-039	KEPS		PERFORM POWER QUALITY MEASUREMENTS FOR THE NODE2/JEM PM LOAD CONFIGURATION III. SET THE HIGH SPEED TRANSIENT TO 196,000 SAMPLES PER SECOND, THE PRE-TRIGGER TO 5 MILLISECONDS, AND THE POST-TRIGGER TO 50 MILLISECONDS. 1. DEPRESS MANUAL TRIGGER AND RECORD FILENAME. FILENAME:_____ 2. PRINT THE DATA FOR NODE 2/JEM PMB BOB. 3. PRINT THE DATA FOR JEM B-STRING UOP. ~OMRSD A3000ME.200-E (JEM PM B S-S V CONFIG 3) ~OMRSD A3000ME.200-H (JEM UOP S-S V CONFIG 3)	
			ON/OFF STEP TRANSIENT	
105-040	KEPS	SQSE SDAS	PREPARE TO CAPTURE TRANSIENT DATA ON THE CURRENT FOR NODE 2/JEM PMB BOB. SET TRIGGER LEVEL 2 AMPS ABOVE THE CURRENT PDAS READING FOR NODE 2/JEM PMB BOB. SET SAMPLE RATE TO 100K PER SECOND.	
105-041	KEPS	DESE	NODE 2/JEM PMB BOB PLRPC ISSUE SINGLE SHOT PULSE ON YOUR MARK WHEN READY. GMT _____:_____:_____ (DAY:HR:MIN)	
105-042	SDAS SQSE	KEPS	CAPTURE COMPLETE. RECORD FILENAME. FILENAME:_____	

RELEASED - Printed documents may be obsolete; validate prior to use.

SECTION IV - OPERATION INSTRUCTIONS

SEQ/STEP	CMD	RESP	DESCRIPTION	VERIF.
105-043	KEPS	SDAS	PRINT DATA AS FOLLOWS: 1. PRINT RISING EDGE DATA FOR MEASUREMENT LOCATION NODE 2/JEM PMB BOB. 2. PRINT FALLING EDGE DATA FOR MEASUREMENT LOCATION NODE 2/JEM PMB BOB. ~OMRSD A3000ME.200-F (JEM PM B TRANS V CONFIG 3)	
			IMPEDANCE MEASUREMENTS	
105-044	KEPS	SQSE	VERIFY/CONFIGURE TFAC SETUP AT NODE 2/JEM PMB BOB PER OMI R2513. GMT _____:_____:_____ (DAY:HR:MIN)	
105-045	KEPS	SQSE	RECORD LOAD AND SOURCE IMPEDANCE DATA AT NODE 2/JEM PMB BOB. FILENAME FOR LOAD:_____ FILENAME FOR SOURCE:_____	
105-046	KEPS	SQSE	VERIFY IMPEDANCE DATA FOR NODE 2/JEM PMB BOB PER OMI R2513 CAPTURED. ~OMRSD A3000ME.200-G (JEM PM B S/L Z CONFIG 3)	

RELEASED - Printed documents may be obsolete; validate prior to use.

SECTION IV - OPERATION INSTRUCTIONS

SEQ/STEP	CMD	RESP	DESCRIPTION	VERIF.
105-047	KEPS	SQSE	VERIFY/CONFIGURE TFAC SETUP AT JEM B-STRING UOP PER OMI R2008. GMT _____:_____:_____ (DAY:HR:MIN)	
105-048	KEPS	SQSE	RECORD SOURCE IMPEDANCE DATA AT JEM B-STRING UOP LOCATION PER R2513. FILENAME FOR SOURCE:_____	
105-049	KEPS	SQSE	VERIFY IMPEDANCE DATA FOR UOP PER OMI R2513 CAPTURED. ~OMRSD A3000ME.200-I (JEM UOP SOURCE Z CONFIG 3)	
105-050	KEPS	PTC	POWER QUALITY AND EME MEASUREMENTS FOR NODE2/JEM PM LOAD CONFIGURATION 3 (TASK III) ARE COMPLETE. COMPLETE GMT _____:_____:_____ (DAY:HR:MIN)	

RELEASED - Printed documents may be obsolete; validate prior to use.

SECTION IV - OPERATION INSTRUCTIONS

SEQ/STEP	CMD	RESP	DESCRIPTION	VERIF.

TASK IV:

NOTE

PERFORM NEXT STEP IF VIDEO SYSTEM HAS NOT ALREADY BEEN ACTIVATED TO SUPPORT POWER QUALITY AND EME.

105-051 KEPS KCTE DKQM PERFORM VIDEO SYSTEM ACTIVATION (CVIU_B, VCU_B, AND CPB_B) PER R0031V1 SEQUENCE 44 FOR POWER QUALITY/EME MEASUREMENTS.
REPORT COMPLETION

START GMT _____:_____:_____ (DAY:HR:MIN)

COMPLETE GMT _____:_____:_____ (DAY:HR:MIN)

NV:_____

NOT PERFORMED:_____

105-052 KEPS VERIFY THE FOLLOWING ORU'S ARE ACTIVE:

ELEMENT	ORU'S
NODE2	REQUIRED LOADS ARE AT LEAST 5 OF THE FOLLOWING: NIA LTL VENT VALVE, NIA LTL ISO VALVE, SFCA LTA FLOW CONTROL VALVE, N2-MDM, LTL PUMP, LTL CTB 3 WAY MIX VALVE, LTL REG 3 WAY MIX VALVE
JEM PM	REQUIRED LOADS ARE AT LEAST 3 OF THE FOLLOWING: PDB-I (EPS2), PIB (B1), DIU-I (B1), DIU III (EPS2), AND AT LEAST 8 OF THE FOLLOWING: PDB-II (DMS2), JCP B, EDSU,PDB-II (ECLSS/TCS2), TCA M TAC, TCA M PUMP, PDB-I(B1), PIB (B2), DIU-I (B2), DIU-I (B3), PDB-II (B2), AND AT LEAST 11 OF THE FOLLOWING: IMV FAN (B), GLAS (1B – 8B), ATU (RMS RACK), PDB RMS, THC B THCU, THC B CABIN FAN, UOP-B1-AD2 AND AT LEAST 4 OF THE FOLLOWING: VCU (B), CPB (B), CVIU (B), TV MONITOR UNIT 1&2 (RMS), CCP (RMS)

RELEASED - Printed documents may be obsolete; validate prior to use.

SECTION IV - OPERATION INSTRUCTIONS

SEQ/STEP	CMD	RESP	DESCRIPTION	VERIF.
105-053	KEPS		RECORD ANY ADDITIONAL NODE 2 2B/3A OR JEM B STRING ENERGIZED LOADS NOT LISTED ABOVE. LOAD RPCM SWITCH _____ _____ _____ _____ _____ _____	
			EME MEASUREMENTS	
105-054	KEPS	KEME DKQM	PERFORM EME MEASUREMENTS PER TPS EMC-3418 FOR THE NODE2/JEM PM LOAD CONFIGURATION IV START GMT _____:_____:_____ (DAY:HR:MIN) COMPLETE GMT _____:_____:_____ (DAY:HR:MIN)	NV:_____
			~OMRSD A3000ME.100-E (JEM PM B NOISE CONFIG 4) ~OMRSD A3000ME.100-F (JEM PM B V RIPPLE CONFIG 4)	
			STEADY STATE AND NOISE & RIPPLE VOLTAGE	
105-055	KEPS		PERFORM POWER QUALITY MEASUREMENTS FOR THE NODE2/JEM PM LOAD CONFIGURATION IV. SET THE HIGH SPEED TRANSIENT TO 196,000 SAMPLES PER SECOND, THE PRE-TRIGGER TO 5 MILLISECONDS, AND THE POST-TRIGGER TO 50 MILLISECONDS. 1. DEPRESS MANUAL TRIGGER AND RECORD FILENAME. FILENAME:_____ 2. PRINT THE DATA FOR NODE 2/JEM PMB BOB. ~OMRSD A3000ME.200-J (JEM PM B S-S V CONFIG 4)	
			ON/OFF STEP TRANSIENT	
105-056	KEPS	SQSE SDAS	PREPARE TO CAPTURE TRANSIENT DATA ON THE CURRENT FOR NODE 2/JEM PMB BOB. SET TRIGGER LEVEL 2 AMPS ABOVE THE CURRENT PDAS READING FOR NODE 2/JEM PMB BOB. SET SAMPLE RATE TO 100K PER SECOND.	

RELEASED - Printed documents may be obsolete; validate prior to use.

SECTION IV - OPERATION INSTRUCTIONS

SEQ/STEP	CMD	RESP	DESCRIPTION	VERIF.
105-057	KEPS	DESE	NODE 2/JEM PMB BOB PLRPC ISSUE SINGLE SHOT PULSE ON YOUR MARK WHEN READY. GMT _____:_____:_____ (DAY:HR:MIN)	
105-058	SDAS SQSE	KEPS	CAPTURE COMPLETE. RECORD FILENAME. FILENAME:_____	
105-059	KEPS	SDAS	PRINT DATA AS FOLLOWS: 1. PRINT RISING EDGE DATA FOR MEASUREMENT LOCATION NODE 2/JEM PMB BOB. 2. PRINT FALLING EDGE DATA FOR MEASUREMENT LOCATION NODE 2/JEM PMB BOB. ~OMRSD A3000ME.200-K (JEM PM B TRANS V CONFIG 4) **IMPEDANCE MEASUREMENTS**	
105-060	KEPS	SQSE	VERIFY/CONFIGURE TFAC SETUP AT NODE 2/JEM PMB BOB PER OMI R2513. GMT _____:_____:_____ (DAY:HR:MIN)	
105-061	KEPS	SQSE	RECORD LOAD AND SOURCE IMPEDANCE DATA AT NODE 2/JEM PMB BOB. FILENAME FOR LOAD:_____ FILENAME FOR SOURCE:_____	

RELEASED - Printed documents may be obsolete; validate prior to use.

SECTION IV - OPERATION INSTRUCTIONS

SEQ/STEP	CMD	RESP	DESCRIPTION	VERIF.
105-062	KEPS	SQSE	VERIFY IMPEDANCE DATA FOR NODE 2/JEM PMB BOB PER OMI R2513 CAPTURED. ~OMRSD A3000ME.200-L (JEM PM B S/L Z CONFIG 4)	
105-063	KEPS	PTC	POWER QUALITY AND EME MEASUREMENTS FOR NODE2/JEM PM LOAD CONFIGURATION 4 (TASK IV) ARE COMPLETE. COMPLETE GMT _____:_____:_____ (DAY:HR:MIN)	
			LOADS DEACTIVATION STEPS	
105-064	KEPS	MS1	PCS JPM:EPS:LIGHTS “JEM LIGHTS” 1. CMD: PDB EPS2 RPC 12 - OPEN OPS: JPM_EPS_PDB_B_EPS2_RPC12_(GLA_B1_OA1)_OP PUI: JSPX96IM0580K GMT _____:_____:_____ (HR:MIN:SEC) 2. VERIFY: PDB EPS2 RPC 12 POSITION - OP ENG: PDB_EPS2 RPC12 POWER STATUS PUI: JSDC00FCP81CJ	
105-065	KEPS	MS1	PCS JPM:EPS:LIGHTS “JEM LIGHTS” 1. CMD: PDB EPS2 RPC 13 - OPEN OPS: JPM_EPS_PDB_B_EPS2_RPC13_(GLA_B3_OA3)_OP PUI: JSPX96IM0581K GMT _____:_____:_____ (HR:MIN:SEC) 2. VERIFY: PDB EPS2 RPC 13 POSITION - OP ENG: PDB_EPS2 RPC13 POWER STATUS PUI: JSDC00FCP81DJ	

RELEASED - Printed documents may be obsolete; validate prior to use.

SECTION IV - OPERATION INSTRUCTIONS

SEQ/STEP	CMD	RESP	DESCRIPTION	VERIF.
105-066	KEPS	MS1	PCS JPM:EPS:LIGHTS “JEM LIGHTS” 1. CMD: PDB EPS2 RPC 14 - OPEN PUI: JSPX96IM0582K OPS: JPM_EPS_PDB_B_EPS2_RPC14_(GLA_B5_OA5)_OP GMT _____:_____:_____ (HR:MIN:SEC) 2. VERIFY: PDB EPS2 RPC 14 POSITION - OP ENG: PDB_EPS2 RPC14 POWER STATUS PUI: JSDC00FCP81EJ	
105-067	KEPS	MS1	PCS JPM:EPS:LIGHTS “JEM LIGHTS” 1. CMD: PDB EPS2 RPC 15 - OPEN OPS: JPM_EPS_PDB_B_EPS2_RPC15_(GLA_B7_OA7)_OP PUI: JSPX96IM0583K GMT _____:_____:_____ (HR:MIN:SEC) 2. VERIFY: PDB EPS2 RPC 15 POSITION - OP ENG: PDB_EPS2 RPC15 POWER STATUS PUI: JSDC00FCP81FJ	
105-068	KEPS	MS1	PCS JPM:EPS:LIGHTS “JEM LIGHTS” 1. CMD: PDB B1 RPC 11 - OPEN OPS: JPM_EPS_PDB_B1_RPC11_(GLA_B2_OF2)_OP PUI: JSPX96IM0495K GMT _____:_____:_____ (HR:MIN:SEC) 2. VERIFY: PDB B1 RPC 11 POSITION - OP ENG: PDB_B1 RPC11 POWER STATUS PUI: JSDC00FCP30TJ	

RELEASED - Printed documents may be obsolete; validate prior to use.

SECTION IV - OPERATION INSTRUCTIONS

SEQ/STEP	CMD	RESP	DESCRIPTION	VERIF.
105-069	KEPS	MS1	PCS JPM:EPS:LIGHTS “JEM LIGHTS” 1. CMD: PDB B1 RPC 12 - OPEN OPS: JPM_EPS_PDB_B1_RPC12_(GLA_B4_OF4)_OP PUI: JSPX96IM0496K GMT _____:_____:_____ (HR:MIN:SEC) 2. VERIFY: PDB B1 RPC 12 POSITION - OP ENG: PDB_B1 RPC12 POWER STATUS PUI: JSDC00FCP30UJ	
105-070	KEPS	MS1	PCS JPM:EPS:LIGHTS “JEM LIGHTS” 1. CMD: PDB B1 RPC 13 - OPEN OPS: JPM_EPS_PDB_B1_RPC13_(GLA_B6_OF6)_OP PUI: JSPX96IM0497K GMT _____:_____:_____ (HR:MIN:SEC) 2. VERIFY: PDB B1 RPC 13 POSITION - OP ENG: PDB_B1 RPC13 POWER STATUS PUI: JSDC00FCP30VJ	
105-071	KEPS	MS1	PCS JPM:EPS:LIGHTS “JEM LIGHTS” 1. CMD: PDB B1 RPC 14 - OPEN OPS: JPM_EPS_PDB_B1_RPC14_(GLA_B8_OF8)_OP PUI: JSPX96IM0498K GMT _____:_____:_____ (HR:MIN:SEC) 2. VERIFY: PDB B1 RPC 14 POSITION - OP ENG: PDB_B1 RPC14 POWER STATUS PUI: JSDC00FCP30WJ	

RELEASED - Printed documents may be obsolete; validate prior to use.

SECTION IV - OPERATION INSTRUCTIONS

SEQ/STEP	CMD	RESP	DESCRIPTION	VERIF.
			ATU B DEACTIVATION (RMS RACK)	
105-072	KEPS	SSFE	CES MATE: LOAD AND RUN MATE SCRIPT MEIT3_MATE_CMDS INDEX: 0X0134 CMD: PDB B1 RPC 15 - OPEN OPS: JPM_EPS_PDB_B1_RPC15_(ATU_B_RMS)_OP (OVRD) PUI: GMT _____:_____:_____ (HR:MIN:SEC)	
105-073	KEPS		TCMS PDB B1:JPM EPS PDB B1 VERIFY: PDB_B1 RPC15 POSN – OP PUI: JSDC00FCP30XJ	
			NOTE PERFORM NEXT STEP IF VIDEO SYSTEM IS NO LONGER REQUIRED FOR TEST AND HAS NOT ALREADY BEEN POWERED DOWN.	
105-074	KEPS	KCTE DKQM	PERFORM VIDEO SYSTEM DEACTIVATION (CVIU_B, VCU_B, AND CPB_B) PER R0031V1 SEQUENCE 45. REPORT COMPLETION START GMT _____:_____:_____ (DAY:HR:MIN) COMPLETE GMT _____:_____:_____ (DAY:HR:MIN)	

NV:_____

NOT PERFORMED:_____

RELEASED - Printed documents may be obsolete; validate prior to use.

SECTION IV - OPERATION INSTRUCTIONS

SEQ/STEP	CMD	RESP	DESCRIPTION	VERIF.
			NOTE PERFORM NEXT STEP IF UOP-B2-AD5 IS NO LONGER REQUIRED FOR TEST AND HAS NOT ALREADY BEEN POWERED DOWN.	
105-075	KEPS	KCTE DKQM	PERFORM OPERATION SUPPORT SETUP – JEM UOP PANEL DEACTIVATION PER R2009 SEQUENCE 04 OPTION G FOR UOP-B1-AD2. REPORT COMPLETION. START GMT _____:_____:_____ (DAY:HR:MIN) COMPLETE GMT _____:_____:_____ (DAY:HR:MIN)	NV:_____ NOT PERFORMED:_____
105-076	TIE PTC 052	PTC EPS B STRING POWER QUALITY AND EME DKQM	COMPLETE. GMT _____:_____:_____ (DAY:HR:MIN)	NV:_____

RELEASED - Printed documents may be obsolete; validate prior to use.

SECTION IV - OPERATION INSTRUCTIONS

SEQ/STEP	CMD	RESP	DESCRIPTION	VERIF.
106-000			**B STRING HEALTH STATUS CHECKS**	
106-001	PTC	DKQM	RECORD THE FOLLOWING INFORMATION: GMT _____:_____:_____ (DAY:HR:MIN)	
				NV:_____
			C&DH INITIAL HEALTH STATUS (PRIMARY STRING)	
			DIU_EPS_2 HEALTH CHECKS	
106-002	KCDH		TCMS(JPM/DIU EPS 2) RECORD: 'DIU_BIT' 1. HEALTH SUMM - _____(BD) ENG: EPS_RACK2_DIU HEALTH STATUS SUMMARY PUI: JSDC00FCA600J 'DIU_DF STAT' 2. AIP - _____(BD) ENG: DIU_EPS2_AIP DF STATUS PUI: JSDC00SWA621J 3. AIA - _____(BD) ENG: DIU_EPS2_AIA DF STATUS PUI: JSDC00SWA622J	
			DIU_B1 HEALTH CHECKS	
106-003	KCDH		TCMS(JPM/DIU B1) RECORD: 'DIU BIT' 1. HEALTH SUMM - _____(BD) ENG: DIU_B1 HEALTH STATUS SUMMARY PUI: JSDC00FCD600J 'DIU DF STATUS' 2. AIP - _____(BD) ENG: DIU_B1_AIP DF STATUS PUI: JSDC00SWD621J 3. AIA -_____(BD) ENG: DIU_B1_AIA DF STATUS PUI: JSDC00SWD622J	

RELEASED - Printed documents may be obsolete; validate prior to use.

SECTION IV - OPERATION INSTRUCTIONS

SEQ/STEP	CMD	RESP	DESCRIPTION	VERIF.
			DIU_B2 HEALTH CHECKS	
106-004	KCDH		TCMS(JPM/ DIU B2)	
			RECORD:	
			'DIU BIT'	
			1. HEALTH SUMM - _____(BD) ENG: DIU_B2 HEALTH STATUS SUMMARY PUI: JSDC00FCD800J	
			'DIU DF STATUS'	
			2. AIP - _____(BD) ENG: DIU_B2_AIP DF STATUS PUI: JSDC00SWD821J	
			3. AIA - _____(BD) ENG: DIU_B2_AIA DF STATUS PUI: JSDC00SWD822J	
			DIU_B3 HEALTH CHECKS	
106-005	KCDH		TCMS(JPM/ DIU B3) RECORD:	
			'DIU BIT'	
			1. HEALTH SUMM - _____(BD) ENG: DIU_B3 HEALTH STATUS SUMMARY PUI: JSDC00FCDA00J	
			'DIU DF STAT'	
			2. AIP – _____(BD) ENG: DIU_B3_AIP DF STATUS PUI: JSDC00SWDA21J	
			3. AIA – _____(BD) ENG: DIU_B3_AIA DF STATUS PUI: JSDC00SWDA22J	

RELEASED - Printed documents may be obsolete; validate prior to use.

SECTION IV - OPERATION INSTRUCTIONS

SEQ/STEP	CMD	RESP	DESCRIPTION	VERIF.
			JCP HEALTH CHECKS	
106-006	KCDH		TCMS (JPM/ ACTIVE JCP INFOMATION)	
			'ACTIVE JCP'	
			RECORD: 1. JCP MODE_____(BD) ENG: OODT_DATA ACTIVE_JCP MODE PUI: JSDC00SWZ713J	
			'JCP B'	
			2. MPC/BIC 1 DEG C – _____(BD) ENG: JCP_B MPC/BIC1 TEMP PUI: JSDC00FCZB00T	
			3. MPC/BIC 2 DEG C - _____(BD) ENG: JCP_B MPC/BIC2 TEMP PUI: JSDC00FCZB01T	

RELEASED - Printed documents may be obsolete; validate prior to use.

SECTION IV - OPERATION INSTRUCTIONS

SEQ/STEP	CMD	RESP	DESCRIPTION	VERIF.
106-007	KCDH		TCMS (JPM ACTIVE JCP HEALTH AND STATUS) RECORD: 'SOFTWARE STATUS' 1. OODT LOGICIAL VER - _____(BD) ENG: OODT_DATA ACTIVE_JCP PROGRAM VERSION PUI: JSDC00SWZ714J 2. OODT DT REV - _____(BD) ENG: OODT_DATA ACTIVE_JCP LM PHYSICAL VERSION PUI: JSDC00SWZ715U 'ERROR STATUS' 3. FRM ERRO INFO - _____(BD) ENG: ACTIVE_JCP FRM ERROR INFORMATION PUI: JSDC00SWZ861J 'MAIN MEMORY ERROR' 4. EPU REGISTER ERROR - _____ (BD) ENG: ACTIVE_JCP MAIN MEMORY EPU REGISTER ERROR PUI: JSDC00SWZ862J 5. BIU REGISTER ERROR - _____ (BD) ENG: ACTIVE_JCP MAIN MEMORY BIU REGISTER ERROR PUI: JSDC00SWZ863J	

RELEASED - Printed documents may be obsolete; validate prior to use.

SECTION IV - OPERATION INSTRUCTIONS

SEQ/STEP	CMD	RESP	DESCRIPTION	VERIF.
106-008	KCDH		TCMS (JPM ACTIVE EDSU_INFORMATION) RECORD: 'GENERAL DISK STATUS' 1. ACTIVE EDSU HSS - _____(BD) ENG: ACTIVE EDSU_HSS PUI: JSDC00SWZ851J 2. EDSU SCSI STATUS - _____(BD) ENG: ACTIVE_JCP EDSU DKC SCSI STATUS PUI: JSDC00SWZ85MJ 3. DETAILED ERROR CODE - _____(BD) ENG: ACTIVE_JCP EDSU DKC DETAIL ERROR CODE PUI: JSDC00SWZ85LJ 4. LOGICAL ADRESS - _____(BD) ENG: ACTIVE_JCP EDSU LOGIC ADDRESS PUI: JSDC00SWZ85QU	
106-009	KCDH		PCS (FAS_MESSAGE) VERIFY: 1. ATTACH HARD COPIES OF PCS FAS LOG FILE. REPORT COMPLETE	
106-010	TIE PTC 052	PTC DKQM	B STRING HEALTH STATUS CHECKS COMPLETE. GMT _____:_____:_____ (DAY:HR:MIN)	

NV:_____

RELEASED - Printed documents may be obsolete; validate prior to use.

SECTION IV - OPERATION INSTRUCTIONS

SEQ/STEP	CMD	RESP	DESCRIPTION	VERIF.
107-000			**JEM A STRING ACTIVATION (JCP-A STANDBY)**	
107-001	PTC	DKQM	RECORD THE FOLLOWING INFORMATION: GMT _____:_____:_____ (DAY:HR:MIN)	NV:_____
			NOTE PERFORM THE FOLLOWING 2 STEPS IF C&C CPU UTILIZATION IS NOT THE ACTIVE DATA DUMP.	
107-002	KCDH	SSFE	CES MATE MEIT3_MATE_ACT_CMDS INDEX: 0X013C CMD: START DATA DUMP COMMAND PUI: LADD96IM0522K OPS: PRIM CCS START DATA DUMP TMPLT APID: 10 LDP:10 DUMP TYPE : NORMAL DUMP LENGTH: 86 MEMORY ADDRESS : 0X7DD138 GMT _____:_____:_____ (HR:MIN:SEC)	
107-003	KCDH		TCMS (DUMP) VERIFY CPU UTILIZATION DUMP IS ACTIVE WITH THE FOLLOWING PARAMETERS MEMORY ADDRESS : 0X7DD138	NOT PERFORMED:_____ (PREVIOUS 2 STEPS)
107-004	TIE	PTC DKQM	PERFORM NODE 2 A STRING PARTIAL DEACTIVATION PER R0031V2 SEQUENCE 108. REPORT COMPLETE. START GMT _____:_____:_____ (DAY:HR:MIN) COMPLETE GMT _____:_____:_____ (DAY:HR:MIN)	NV:_____
107-005	KEPS	DET1 DKQN	CLOSE EPS MANUAL SWITCH FOR JEM A POWER STRING.	TNW:_____

RELEASED - Printed documents may be obsolete; validate prior to use.

SECTION IV - OPERATION INSTRUCTIONS

SEQ/STEP	CMD	RESP	DESCRIPTION	VERIF.

CAUTION

NODE 2 DDCU'S AND RPCM'S ARE ACTIVATED WITHOUT COOLANT FLOWING THROUGH THE ITCS MT LOOP. BASE PLATE TEMPERATURES MUST BE MONITORED FOR OVERHEATING BEGINNING WITH THE NEXT STEP.

NOTE

UPON ACTIVATION OF DDCUS N2STB-1B AND N2STB-4A THE PDU-A1, PDU-A2, PDB-EPS1, DIU-EPS-A, DIU-A1 AND PIB-A1 WILL AUTOMATICALLY RECEIVE POWER. COMMUNICATION WITH PDB-EPS1 IS NOT ESTABLISHED UNTIL DIU-A2 IS ACTIVATED

DDCU N2STBD-1B ACTIVATION STATUS

107-006 KEPS MS1

PCS
NODE 2:EPS:DDCU N2S1B

VERIFY:
INTEGRATION COUNTER – "INCREMENTING"
PUI: N2PC15FC0408U
ENG: DDCU N2STB-1B INTEGRATION COUNTER

107-007 KEPS MS1

PCS
ISS HOMEPAGE:NODE 2:EPS:DDCU N2S1B

VERIFY/RECORD:
INPUT VOLTAGE = _____ (135-173 VDC)
PUI:N2PC15FC0420V, N2PC15FC0408U
ENG: DDCU N2STB-1B INPUT INTEGRATED VOLTATE

INPUT CURRENT = _____ (BD)
PUI: N2PC15FC0418C, N2PC15FC0408U
ENG: DDCU N2STB-1B INPUT INTEGRATED CURRENT

BASEPLATE TEMP = _____ (< 43.8C)
PUI: N2PC15FC0417T
ENG: DDCU N2STB-1B BASEPLATE TEMP

POWER SUPPLY TEMP = _____ (< 43.8C)
PUI: N2PC15FC0416T
ENG: DDCU N2STB-1B POWER SUPPLY TEMP

ELEMENT TEMP = _____ (< 43.8C)
PUI: N2PC15FC0415T
ENG: DDCU N2STB-1B ELEMENT TEMP

RELEASED - Printed documents may be obsolete; validate prior to use.

SECTION IV - OPERATION INSTRUCTIONS

SEQ/STEP	CMD	RESP	DESCRIPTION	VERIF.

DDCU N2STBD-1B CONVERTER ACTIVATION

107-008 KEPS MS1 PCS

NODE2:EPS: DDCU N2S1B:CONVERTER

1. CMD: DDCU N2S1B CONVERTER-ON - ARM
   PUI: LAPC96IM0029K
   OPS: PMCA_DDCU_CONV_ON_TMPLT
   EXECUTE

2. CMD: DDCU N2S1B CONVERTER-ON - ON
   PUI: LAPC96IM0029K
   OPS: PMCA_DDCU_CONV_ON_TMPLT
   EXECUTE

   GMT _____:_____:_____ (HR:MIN:SEC)

3. VERIFY:
   TCMS (DM0N)
   DDCU N2S1B ON OFF CMD STATUS – ON
   PUI: N2PC15FC0123J
   ENG: DDCU N2STB-1B ON OFF CMD STATUS

RELEASED - Printed documents may be obsolete; validate prior to use.

SECTION IV - OPERATION INSTRUCTIONS

SEQ/STEP	CMD	RESP	DESCRIPTION	VERIF.
107-009	KEPS	MS1	PCS ISS HOMEPAGE:NODE 2:EPS:DDCU N2S1B OUTPUT VOLTAGE = _____ (121-128 VDC) PUI: N2PC15FC0421V, N2PC15FC0408U ENG: DDCU N2STB-1B OUTPUT INTEGRATED VOLTAGE OUTPUT CURRENT = _____ (0-5 AMPS) PUI: N2PC15FC0419C, N2PC15FC0408U ENG: DDCU N2STB-1B OUTPUT INTEGRATED CURRENT ~OMRSD A3000MI.100-D (EPS N2STB-1B) **DDCU N2STBD-4A ACTIVATION STATUS**	
107-010	KEPS	MS1	PCS ISS HOMEPAGE:NODE 2:EPS:DDCU N2S4A VERIFY: INTEGRATION COUNTER – “INCREMENTING” PUI: N2PC16FC0408U ENG: DDCU N2STB-4A INTEGRATION COUNTER	

RELEASED - Printed documents may be obsolete; validate prior to use.

SECTION IV - OPERATION INSTRUCTIONS

SEQ/STEP	CMD	RESP	DESCRIPTION	VERIF.
107-011	KEPS	MS1	PCS ISS HOMEPAGE:NODE 2:EPS:DDCU N2S4A VERIFY/RECORD: INPUT VOLTAGE = _____ (135-173 VDC) PUI: N2PC16FC0420V, N2PC15FC0408U ENG: DDCU N2STB-4A INPUT INTEGRATED VOLTAGE INPUT CURRENT = _____ (BD) PUI: N2PC16FC0418C, N2PC15FC0408U ENG: DDCU N2STB-4A INPUT INTEGRATED CURRENT BASEPLATE TEMP = _____ (< 43.8C) PUI: N2PC16FC0417T ENG: DDCU N2STB-4A BASEPLATE TEMP POWER SUPPLY TEMP = _____ (< 43.8C) PUI: N2PC16FC0416T ENG: DDCU N2STB-4A POWER SUPPLY TEMP ELEMENT TEMP = _____ (< 43.8C) PUI: N2PC16FC0415T ENG: DDCU N2STB-4A ELEMENT TEMP	

RELEASED - Printed documents may be obsolete; validate prior to use.

SECTION IV - OPERATION INSTRUCTIONS

SEQ/STEP	CMD	RESP	DESCRIPTION	VERIF.

DDCU N2STBD-4A CONVERTER ACTIVATION

107-012 KEPS MS1 PCS

NODE2:EPS: DDCU N2S4A: CONVERTER N2S4A

1. CMD: DDCU N2S4A CONVERTER-ON ARM
   PUI: LAPC96IM0029K
   OPS: PMCA_DDCU_CONV_ON_TMPLT
   EXECUTE

2. CMD: DDCU N2S1B CONVERTER-ON ON
   PUI: LAPC96IM0029K
   OPS: PMCA_DDCU_CONV_ON_TMPLT
   EXECUTE

   GMT _____:_____:_____ (HR:MIN:SEC)

3. VERIFY:
   TCMS (DMON)
   DDCU N2S4A ON OFF CMD STATUS – ON
   PUI: N2PC16FC0123J
   ENG: DDCU N2STB-4A ON OFF CMD STATUS

RELEASED - Printed documents may be obsolete; validate prior to use.

SECTION IV - OPERATION INSTRUCTIONS

SEQ/STEP	CMD	RESP	DESCRIPTION	VERIF.
107-013	KEPS	MS1	PCS ISS HOMEPAGE:NODE 2:EPS:DDCU N2S4A OUTPUT VOLTAGE = _____ (121-128 VDC) PUI: N2PC16FC0421V, N2PC16FC0408U ENG: DDCU N2STB-4A OUTPUT INTEGRATED VOLTAGE OUTPUT CURRENT = _____ (0-5 AMPS) PUI: N2PC16FC0419C, N2PC16FC0408U ENG: DDCU N2STB-4A OUTPUT INTEGRATED CURRENT ~OMRSD A3000MI.100-D (EPS N2STB-4A) **NOTE** SEQ 109 CAN BE PERFORMED IN PARALLEL WITH SEQ 107 UNTIL HEALTH AND STATUS HAS BEEN ESTABLISHED FOR THE JEM ORUS THAT WERE AUTOMATICALLY ACTIVATED, THEN SEQ 107 WILL STANDBY UNTIL NODE-2 MTL REACTIVATION IS COMPLETE.	
107-014	TIE	PTC DKQM	PERFORM NODE 2 A STRING RE-ACTIVATION PER R0031V2 SEQUENCE 109. REPORT COMPLETE. START GMT _____:_____:_____ (DAY:HR:MIN) COMPLETE GMT _____:_____:_____ (DAY:HR:MIN)	NV:_____

RELEASED - Printed documents may be obsolete; validate prior to use.

SECTION IV - OPERATION INSTRUCTIONS

SEQ/STEP	CMD	RESP	DESCRIPTION	VERIF.
			INITIAL C&DH STATUS VERIFICATION	
			DIU-EPS-1 VERIFICATION	
107-015	KCDH	MS1	PCS JPM:CDH:JEM SLB 1 'DIU EPS 1' VERIFY 1. DI DF STAT – CURRENT ENG: DIU_EPS1_DI DF STATUS PUI: JSDC00SWA120J 2. DI HEALTH STATUS - NORMAL ENG: EPS_RACK1_DIU MONITOR STATUS PUI: JSDC00FCA101J ~OMRSD A3000MI.100-C (PARTIAL CDH DIU_EPS1)	
107-016	KCDH		TCMS (DIU_EPS1) VERIFY: 'DIU_BIT' 1. HEALTH SUM - NORMAL ENG: EPS_RACK1_DIU HEALTH STATUS SUMMARY PUI: JSDC00FCA100J 2. BIT STAT - VALID ENG: EPS_RACK1_DIU BIT STATUS PUI: JSDC00FCA10EJ 3. BIT RESULT - NORMAL ENG: EPS_RACK1_DIU BIT RESULT PUI: JSDC00FCA10FJ ~OMRSD A3000MI.100-C (PARTIAL CDH DIU_EPS1)	

RELEASED - Printed documents may be obsolete; validate prior to use.

SECTION IV - OPERATION INSTRUCTIONS

SEQ/STEP	CMD	RESP	DESCRIPTION	VERIF.
			DIU A1 STATUS VERIFICATION	
107-017	KCDH	MS1	PCS JPM:CDH:JEM SLB 1 'DIU-A1' VERIFY 1. DI DF STAT – CURRENT ENG: DIU_A1_DI DF STATUS PUI: JSDC00SWD020J 2. DI HEALTH STATUS - NORMAL ENG: DIU_A1 MONITOR STATUS PUI: JSDC00FCD001J ~OMRSD A3000MI.100-C (PARTIAL CDH DIU_A1)	
107-018	KCDH		TCMS (DIU_A1) 'DIU_BIT' 1. BIT STATUS ENG: DIU_A1 BIT STATUS– VALID PUI: JSDC00FCD00EJ 2. BIT RESULT ENG: DIU_A1 BIT RESULT – NORMAL PUI: JSDC00FCD00FJ 3. HEALTH SUMM - NORMAL ENG: DIU_A1_HEALTH STATUS SUMMARY PUI: JSDC00FCD000J ~OMRSD A3000MI.100-C (PARTIAL CDH DIU_A1)	

RELEASED - Printed documents may be obsolete; validate prior to use.

SECTION IV - OPERATION INSTRUCTIONS

SEQ/STEP	CMD	RESP	DESCRIPTION	VERIF.
			ESTABLISH COMM BETWEEN DIU-EPS-1 AND PDU A1	
107-019	KEPS	SSFE	CES MATE LOAD AND RUN SCRIPT MEIT3_MATE_CMDS INDEX: 0X0019 CMD: JPM_CDH_DIU/ORU (RS422)_COMM_START TMPLT PUI: JSDD96IM0035K PARAMETER: 4 (DIU EPS1) PARAMETER: 5 (PDU A1) GMT _____:_____:_____ (HR:MIN:SEC)	
107-020	KEPS	MS1	PCS JPM:EPS: PDU A1 'PDU_A1_RPC_DETAILS' 'PDU A1' VERIFY: 1. DATA FRAME COUNTER – CURRENT PUI: JSDC00SWPH30J ENG:SYS_PDU_A DF STATUS 2. HEALTH STATUS SUMMARY – BLANK (NORMAL) PUI: JSDC00FCPH00J ENG: SYS_PDU_A HEALTH STATUS SUMMARY ~OMRSD A3000MI.100-C (EPS PDU_A1)	
107-021	KEPS		TCMS PDU A1: JPM EPS PDU A1 RECORD: 1. JRPCM1 INPUT VOLTAGE _____ (BD) ENG: SYS_PDU_A RPCM(1-7) INPUT VOLTAGE PUI: JSDC00FCPH1ZV 2. JRPCM2 INPUT VOLTAGE _____ (BD) ENG: SYS_PDU_A RPCM(RPC8-14) INPUT VOLTAGE PUI: JSDC00FCPH20V	

RELEASED - Printed documents may be obsolete; validate prior to use.

SECTION IV - OPERATION INSTRUCTIONS

SEQ/STEP	CMD	RESP	DESCRIPTION	VERIF.
			ESTABLISH COMM BETWEEN DIU A1 AND PDU A2	
107-022	KEPS	SSFE	CES MATE LOAD AND RUN MATE SCRIPT MEIT3_MATE_CMDS INDEX: 0X000E CMD: JPM_CDH_DIU/ORU_(RS422)_COMM_START_TMPLT PUI: JSDD96IM0035K PARAMETER: 6 (DIU A1) PARAMETER: 3 (PDU A2) GMT _____:_____:_____ (HR:MIN:SEC)	
107-023	KEPS	MS1	PCS JPM:EPS:PDU A2 'PDU_A2_RPC_DETAILS' 'PDU A2' VERIFY 1. DATA FRAME COUNTER – CURRENT PUI: JSDC00SWPF30J ENG: PDU_PL_A DF STATUS 2. HEALTH STATUS SUMMARY – BLANK (NORMAL) PUI: JSDC00FCPF00J ENG: PL_PDU_A HEALTH STATUS SUMMARY ~OMRSD A3000MI.100-C (EPS PDU A2)	

RELEASED - Printed documents may be obsolete; validate prior to use.

SECTION IV - OPERATION INSTRUCTIONS

SEQ/STEP	CMD	RESP	DESCRIPTION	VERIF.
107-024	KEPS	MS1	TCMS PDU A2: JPM EPS PDU A2 RECORD: 1. JRPCM1 INPUT VOLTAGE _____ (BD) ENG: PL_PDU_A RPCM(1-7) INPUT VOLTAGE PUI: JSDC00FCPF1XV 2. JRPCM2 INPUT VOLTAGE _____ (BD) ENG: PL_PDU_A RPCM(RPC8-13) INPUT VOLTAGE PUI: JSDC00FCPF1YV **ACTIVATE HCTL_A**	
107-025	KEPS	MS1	PCS JPM:EPS:PDU A1 'PDU_A1_RPC DETAILS' 'JRPCM2' 1. CMD: PDU A1 RPC 14 - CLOSE PUI: JSPX96IM0749K OPS: JPM_EPS_PDU_A1_RPC14_(HCTL_A)_CL EXECUTE GMT _____:_____:_____ (HR:MIN:SEC) 2. VERIFY: PDU A1 RPC 14 POSN - CL PUI: JSDC00FCPH0TJ ENG: SYS_PDU_A_RPC14 POWER STATUS	
107-026	KEPS		TCMS (DMON) VERIFY: 1. DATA FRAME STATUS - CURRENT PUI: JSDC00SWT360J ENG: HCTL-A DF STATUS 2. HEALTH SUMMARY - NORMAL PUI: JSDC00FCT300J ENG: PM_HCTL_A HEALTH STATUS SUMMARY	

RELEASED - Printed documents may be obsolete; validate prior to use.

SECTION IV - OPERATION INSTRUCTIONS

SEQ/STEP	CMD	RESP	DESCRIPTION	VERIF.
			DEACTIVATE HCTL_A	
107-027	KEPS	SSFE	CES MATE: LOAD AND RUN MATE SCRIPT MEIT3_MATE_CMDS INDEX: 0X0135 CMD: –JPM_EPS_PDU_A1_RPC14_(HCTL_A)_OP PUI:JSPX96IM0759K EXECUTE GMT _____:_____:_____ (HR:MIN:SEC)	
107-028	KEPS		TCMS PDU A1:JPM EPS PDU A1 PDU A1 RPC 14 POSN - OP PUI: JSDC00FCPH0TJ ENG: SYS_PDU_A RPC14 POWER STATUS	
107-029	KTCN	PTC	VERIFY NODE 2 COMPLETE WITH MTL REACTIVATION BEFORE PROCEEDING WITH THE REMAINDER OF JEM ACTIVATION	
			INHIBIT C&C MDM TO DIU-EPS 1 COMMAND	
107-030	KCDH	SSFE	CES MATE LOAD AND RUN MATE SCRIPT MEIT3_MATE_CMDS WITH THE FOLLOWING PARAMETERS. INDEX: 0X0009 ENG: JPM_CDH_DIU_A4_CMD_RCV_FROM_C&C_MDM_INH PUI: JSDD96IM0005K EXECUTE GMT _____:_____:_____ (HR:MIN:SEC)	
107-031	KCDH		TCMS (DIU_EPS1) ‘DIU CMD INHIBIT FLAG’ VERIFY: MDM COMMAND – INHIBIT ENG: EPS_RACK1_DIU MDM COMMAND INHIBIT FLAG PUI: JSDC00FCA11QJ	

RELEASED - Printed documents may be obsolete; validate prior to use.

SECTION IV - OPERATION INSTRUCTIONS

SEQ/STEP	CMD	RESP	DESCRIPTION	VERIF.
			ENABLE FAS/LIMIT CHECK FOR DIU_EPS1 AND DIU_A1 COMMUNICATION STATUS	
107-032	KCDH	SSFE	CES MATE LOAD AND RUN MATE SCRIPT MEIT3_MATE_CMDS WITH THE FOLLOWING PARAMETERS. INDEX: 0X0064 CMD: JPM_CDH_ACTIVE_JCP_EVENT_DET_ENA_TMPLT PUI: JSDD96IM0227K PARAMETER 1: 85 (EPS_RACK1_DIU_COMMUNICATION ERROR) EXECUTE GMT _____:_____:_____ (HR:MIN:SEC)	
107-033	KCDH		TCMS (DIU_EPS1) 'DIU EVENT INHIBIT FLAG' VERIFY: DIU COMM ERROR - ENABLE ENG:EVENT INHIBIT FLAG (EPS_RACK1_DIU COMMUNICATION ERROR) PUI: JSDC00SWZ320J	
107-034	KCDH	SSFE	CES MATE LOAD AND RUN MATE SCRIPT MEIT3_MATE_CMDS WITH THE FOLLOWING PARAMETERS. INDEX: 0X0063 CMD: JPM_CDH_ACTIVE_JCP_EVENT_DET_ENA_TMPLT ENG: ENABLE EVENT PUI: JSDD96IM0227K PARAMETER: 63 (DIU_A1 COMMUNICATION ERROR EXECUTE) GMT _____:_____:_____ (HR:MIN:SEC)	
107-035	KCDH		TCMS (DIU_A1) 'DIU EVENT INHIBIT FLAG' VERIFY: DIU COMM ERR – ENABLE ENG: EVENT INHIBIT FLAG(DIU_A1 COMMUNICATION ERROR) PUI: JSDC00SWZ31MJ	

RELEASED - Printed documents may be obsolete; validate prior to use.

SECTION IV - OPERATION INSTRUCTIONS

SEQ/STEP	CMD	RESP	DESCRIPTION	VERIF.
			PERFORM EPS MEASUREMENTS	
			NOTE QUIET TIME IS REQUIRED DURING CONDUCTED EMISSIONS/VOLTAGE RIPPLE AND POWER QUALITY MEASUREMENTS.	
107-036	PTC	KEPS DKQM	PERFORM POWER QUALITY AND EME MEASUREMENTS FOR NODE2/JEM LOAD CONFIGURATION I PER EPS A-STRING POWER QUALITY AND EME R0031V2 SEQUENCE 110 TASK I REPORT COMPLETION. START GMT _____:_____:_____ (DAY:HR:MIN) COMPLETE GMT _____:_____:_____ (DAY:HR:MIN)	
				NV:_____
107-037	KEPS	PTC	OK TO PROCEED WITH SEQUENCE	

RELEASED - Printed documents may be obsolete; validate prior to use.

SECTION IV - OPERATION INSTRUCTIONS

SEQ/STEP	CMD	RESP	DESCRIPTION	VERIF.
			PDB-A2 ACTIVATION	
107-038	KEPS	MS1	PCS JPM:EPS:PDU A1 'PDU A1 RPC DETAIL' 'JRPCM2' 1. CMD: PDU A1 RPC11 (PDB A2) - CLOSE PUI: JSPX96IM0747K OPS: JPM_EPS_PDU_A1_RPC11_(PDB_A2)_CL EXECUTE: GMT _____:_____:_____ (HR:MIN:SEC) 2. VERIFY: PDU A1 RPC11 (PDB A2) POSN - CL ENG: SYS_PDU_A RPC11 POWER STATUS PUI: JSDC00FCPH0QJ PCS:JPM:EPS:PDB A2 'PDB A2 RPC DETAILS' 'PDB A2' 3. DATA FRAME STATUS - CURRENT PUI: JSDC00SWP220J ENG: PDB_A2 DF STATUS 4. HEALTH SUMMARY - BLANK (NORMAL) PUI: JSDC00FCP200J ENG: PDB_A2 HEALTH STATUS SUMMARY	

RELEASED - Printed documents may be obsolete; validate prior to use.

SECTION IV - OPERATION INSTRUCTIONS

SEQ/STEP	CMD	RESP	DESCRIPTION	VERIF.

NOTE

DIU A2 COMMUNICATION INTERFACE IS AUTOMATICALLY ESTABLISHED AFTER PDB A2 RPC6 IS CLOSED

ACTIVATE DIU A2

107-039 KCDH MS1

PCS
JEM:JEM EPS:PDB A2
'PDB A2 RPC DETAILS'

1. CMD: RPC 2 (DIU_A2 VDO)- CLOSE
   OPS: JPM_EPS_PDB_A2_RPC02_(DIU_A2_VLV)_CL
   PUI: JSPX96IM0458K
   EXECUTE

   GMT _____:_____:_____ (HR:MIN:SEC)

2. VERIFY: RPC2 POSN (DIU A2 VDO) – CL
   ENG: PDB_A2 RPC2 POWER STATUS
   PUI: JSDC00FCP20DJ

107-040 KCDH MS1

PCS
JEM:JEM_EPS:PDB A2

'PDB A2 RPC DETAILS'

1. CMD: RPC 6 (DIU_A2 CNTLR) - CLOSE
   OPS:
   JPM_EPS_PDB_A2_RPC06_(DIU_A2_CNTLR)_CL
   PUI: JSPX96IM0462K
   EXECUTE

   GMT _____:_____:_____ (HR:MIN:SEC)

2. VERIFY: RPC6 POSN (DIU A2 CNTLR) – CL
   ENG: PDB_A2 RPC6 POWER STATUS
   PUI: JSDC00FCP20HJ

RELEASED - Printed documents may be obsolete; validate prior to use.

SECTION IV - OPERATION INSTRUCTIONS

SEQ/STEP	CMD	RESP	DESCRIPTION	VERIF.
			NOTE ALLOW 60 SECONDS FOR DIU A2 TO COMPLETE INTERNAL BIT TEST BEFORE PROCEEDING TO THE NEXT VERIFICATION.	
			VERIFY DIU A2 STATUS	
107-041	KCDH	MS1	PCS JPM:JEM CDH:JEM SLB 1 'DIU A2' VERIFY: 1. DI DF STATUS - CURRENT ENG: DIU_A2_DI_DF_STAT PUI: JSDC00SWD220J 2. DI HEALTH STATUS – NORMAL ENG: DIU_A2 MONITOR STATUS PUI: JSDC00FCD201J ~OMRSD A3000MI.100-C (PARTIAL CDH DIU A2)	
107-042	KCDH		TCMS (DIU_A2) 'DIU BIT' VERIFY: 1. BIT STAT – VALID ENG: DIU_A2 BIT STATUS PUI: JSDC00FCD20EJ 2. BIT RESULT – NORMAL ENG: DIU_A2 BIT RESULT PUI: JSDC00FCD20FJ ~OMRSD A3000MI.100-C (PARTIAL CDH DIU A2)	

RELEASED - Printed documents may be obsolete; validate prior to use.

SECTION IV - OPERATION INSTRUCTIONS

SEQ/STEP	CMD	RESP	DESCRIPTION	VERIF.
			ESTABLISH COM DIU A2 AND PDB_EPS1	
107-043	KEPS	SSFE	CES MATE LOAD AND RUN MATE SCRIPT MEIT3_MATE_CMDS INDEX 0X0011 CMD:JPM_CDH_DIU/ORU_(RS422)_COMM_ START_TMPLT PUI: JSDD96IM0035K PARAMETER 1: 7 (DIU_A2) PARAMETER 2: 3 (PDB_EPS 1) EXECUTE GMT _____:_____:_____ (HR:MIN:SEC)	
107-044	KEPS	MS1	PCS JPM:EPS:PDB EPS1 ‘PDB_EPS1_RPC_DETAILS’ ’PDB EPS1’ VERIFY 1. DATA FRAME STATUS - CURRENT PUI: JSDC00SWP720J ENG: PDB_EPS1_DF_STATUS 2. HEALTH STATUS SUMMARY – BLANK (NORMAL) PUI: JSDC00FCP700J PDB_EPS1 HEALTH STATUS SUMMARY ~OMRSD A3000MI.100-C (EPS PDB_EPS1)	
			START SAMPLING AND SETTING PIB_A1 LOAD TABLE	
107-045	KEPS	MS1	PCS JPM:EPS:PDB EPS1 ‘PDB_EPS1_RPC_DETAILS’ ‘PDB EPS1’ 1. CMD: PDB EPS1 RPC3 - CLOSE PUI: JSPX96IM0537K OPS: JPM_EPS_PDB_A_EPS1_RPC03_(PIB-A1)_CL EXECUTE GMT _____:_____:_____ (HR:MIN:SEC) 2. VERIFY: PDB EPS1 RPC3 POSN - CL PUI: JSDC00FCP70EJ ENG: PDB_EPS1 RPC3 POWER STATUS	

RELEASED - Printed documents may be obsolete; validate prior to use.

SECTION IV - OPERATION INSTRUCTIONS

SEQ/STEP	CMD	RESP	DESCRIPTION	VERIF.
107-046	KEPS	MS1	PCS JPM:EPS:PIB A1 ‘PIB A1 SWITCH DETAILS’ ‘PIB A1’ VERIFY 1. DATA FRAME STATUS – CURRENT PUI: JSDC00SWPC70J ENG: PIB_A1 DF STATUS 2. HEALTH SUMMARY – BLANK (NORMAL) PUI: JSDC00FCPC00J ENG: PIB_A1 HEALTH STATUS SUMMARY ~OMRSD A3000MI.100-C (EPS PIB_A1)	
107-047	KEPS		TCMS PIB A1:JPM EPS PIB A1 VERIFY: 1. BIT STATUS – VALID ENG: PIB_A1 BIT STATUS PUI: JSDC00FCPC39J 2. BIT RESULT – NORMAL ENG: PIB_A1 BIT RESULT PUI: JSDC00FCPC3AJ	

RELEASED - Printed documents may be obsolete; validate prior to use.

SECTION IV - OPERATION INSTRUCTIONS

SEQ/STEP	CMD	RESP	DESCRIPTION	VERIF.

NOTE

DIU A3 COMMUNICATION INTERFACE IS AUTOMATICALLY ESTABLISHED AFTER PDB A2 RPC 7 IS CLOSED

ACTIVATE DIU A3

107-048 KCDH MS1

PCS
JEM:JEM_EPS:PDB A2

'PDB A2 RPC DETAILS'

1. CMD RPC 5 (DIU_A3 VDO) - CLOSE
   OPS: JPM_EPS_PDB_A2_RPC05_(DIU_A3_VLV)_CL
   PUI: JSPX96IM0461K
   EXECUTE

   GMT _____:_____:_____ (HR:MIN:SEC)

2. VERIFY: RPC5 POSN (DIU_A3_VDO) – CL
   ENG: PDB_A2 RPC5 POWER STATUS
   PUI: JSDC00FCP20GJ

107-049 KCDH MS1

PCS
JEM:JEM_EPS_PDB A2

'PDB A2 RPC DETAILS'

1. CMD: RPC 7 (DIU_A3 CNTRL) - CLOSE
   OPS:
   JPM_EPS_PDB_A2_RPC07_(DIU_A3_CNTLR)_CL
   PUI: JSPX96IM0463K
   EXECUTE

   GMT _____:_____:_____ (HR:MIN:SEC)

2. VERIFY: RPC7 POSN (DIU_A3 CNTRL) – CL
   ENG: PDB_A2 RPC7 POWER STATUS
   PUI: JSDC00FCP20IJ

RELEASED - Printed documents may be obsolete; validate prior to use.

SECTION IV - OPERATION INSTRUCTIONS

SEQ/STEP	CMD	RESP	DESCRIPTION	VERIF.
			NOTE WAIT APPROXIMATELY 60 SECONDS FOR DIU A3 TO COMPLETE INTERNAL BIT TEST PRIOR TO VERIFICATION OF THE NEXT STEP.	
			VERIFY DIU A3 STATUS	
107-050	KCDH	MS1	PCS JPM:CDH:JEM SLB 1 'DIU A3' VERIFY 1. DI DF STAT - CURRENT ENG: DIU_A3_DI_DF_STATUS PUI: JSDC00SWD420J 2. DI HEALTH STATUS – NORMAL ENG: DIU_A3 MONITOR STATUS PUI: JSDC00FCD401J ~OMRSD A3000MI.100-C (PARTIAL CDH DIU A3)	
107-051	KCDH		TCMS (DIU_A3) VERIFY: 'DIU_BIT' 1. BIT STAT – VALID ENG: DIU_A3 BIT STATUS PUI: JSDC00FCD40EJ 2. BIT RESULT – NORMAL ENG: DIU_A3 BIT RESULT PUI: JSDC00FCD40FJ ~OMRSD A3000MI.100-C (PARTIAL CDH DIU A3)	

RELEASED - Printed documents may be obsolete; validate prior to use.

SECTION IV - OPERATION INSTRUCTIONS

SEQ/STEP	CMD	RESP	DESCRIPTION	VERIF.
			PDB-A1 ACTIVATION	
107-052	KEPS	MS1	PCS JEM:EPS:PDU A1 'PDU A1 RPC DETAILS' 'JRPCM2' 1. CMD: PDU A1 RPC12 (PDB A1) - CLOSE PUI: JSFX96IM0748K OPS: JPM_EPS_PDU_A1_RPC12_(PDB_A1)_CL EXECUTE GMT _____:_____:_____ (HR:MIN:SEC) 2. VERIFY: PDU-A1 RPC12 (PDB A1) POSN – CL ENG: SYS_PDU_A RPC12 POWER STATUS PUI: JSDC00FCPH0RJ	
107-053	KEPS	MS1	PCS JPM:EPS:PDB A1 'PDB A1 RPC DETAILS' 'PDB A1' VERIFY: 1. DATA FRAME STATUS – CURRENT ENG: PDB_A1 DF STATUS PUI: JSDC00SWP120J 2. HEALTH SUMMARY – BLANK (NORMAL) ENG: PDB_A1 HEALTH STATUS SUMMARY PUI: JSDC00FCP100J	

RELEASED - Printed documents may be obsolete; validate prior to use.

SECTION IV - OPERATION INSTRUCTIONS

SEQ/STEP	CMD	RESP	DESCRIPTION	VERIF.
			POWER ON PIB-A2	
107-054	KEPS	MS1	PCS JPM:EPS:PDB A2 'PDB A2 RPC DETAILS 'PDB A2' 1. CMD: PDB A2 RPC3 (PIB A2) - CLOSE PUI: JSPX96IM0459K OPS: JPM_EPS_PDB_A2_RPC03_(PIB_A2)_CL EXECUTE: GMT _____:_____:_____ (HR:MIN:SEC) 2. VERIFY: PDB A2 RPC3 (PIB A2) POSN - CL PUI: JSDC00FCP20EJ ENG: PDB_A2 RPC3 POWER STATUS PCS JPM:EPS:PIB A2 'PIB A2 SWITCH DETAILS' 'PIB A2' 3. DATA FRAME STATUS - CURRENT PUI: JSDC00SWPD70J ENG: PIB_A2 DF STATUS 4. HEALTH SUMMARY – BLANK (NORMAL) ENG: PIB_A2 HEALTH STATUS SUMMARY PUI: JSDC00FCPD00J	
107-055	KEPS		TCMS PIB A2:JPM EPS PIB A2 VERIFY: 1. BIT STATUS - VALID ENG: PIB_A2 BIT STATUS PUI: JSDC00FCPD39J 2. BIT RESULT - NORMAL ENG: PIB_A2 BIT RESULT PUI: JSDC00FCPD3AJ	

RELEASED - Printed documents may be obsolete; validate prior to use.

SECTION IV - OPERATION INSTRUCTIONS

SEQ/STEP	CMD	RESP	DESCRIPTION	VERIF.

ACTIVATE DIU_A1 VDO

107-056 KEPS MS1

PCS
JPM:JEM EPS:PDB EPS 1

'PDB EPS 1 RPC DETAILS'

1. CMD:RPC 2 DIU A1 (VDO PWR) - CLOSE
   OPS:
   JPM_EPS_PDB_A_EPS1_RPC02_(DIU_A1_VLV)_CL
   PUI: JSPX96IM0536K
   EXECUTE

   GMT _____:_____:_____ (HR:MIN:SEC)

2. VERIFY: RPC2 DIU A1 (VDO PWR) - CL
   ENG: PDB_EPS1 RPC2 POWER STATUS
   PUI: JSDC00FCP70DJ

CAUTION

THE JCP CANNOT BE POWERED ON IF THE TEMPERATURES ARE ABOVE 30 DEG C.

JCP A ACTIVATION

107-057 KCDH MS1

PCS
JPM:CDH:STBY JCP

'STANDBY JCP'

VERIFY:
1.
   MPC/BIC TEMP 1: _____ < 30 DEGREES C
   ENG: JCP_A MPC/BIC1 TEMP
   PUI: JSDC00FCZA00T

2.
   MPC/BIC TEMP 2: _____ < 30 DEGREES C
   ENG: JCP_A MPC/BIC2 TEMP
   PUI: JSDC00FCZA01T

RELEASED - Printed documents may be obsolete; validate prior to use.

SECTION IV - OPERATION INSTRUCTIONS

SEQ/STEP	CMD	RESP	DESCRIPTION	VERIF.

NOTE

WHEN PDU A1 RPC 10 IS CLOSED THE JCP IS POWERED AUTOMATICALLY VIA NORMALLY CLOSED PDB_DMS1 RPC1 (JCPA MPC/BIC) AND RPC 7 (JCP_A EDSU)

NOTE

IT TAKES APPROXIMATELY 4 MINUTES AND 40 SECONDS FROM JCP POWER ON UNTIL HOT STANDBY MODE. FATAL ERROR WILL INDICATE OCCURRENCE UNTIL JCP SELF-TEST (BIT) IS COMPLETED (APPOXIMATELY 1 MINUTE). THIS ALSO CAUSES JCP MODE TO TEMPORARILY INDICATE FATAL ERROR.

JCP MODE WILL INDICATE THE FOLLOWING SEQUENCE: COLD_STANDBY, FATAL ERROR, TRANSITIONING, HOT_STANDBY.

ACTIVATE PDB-DMS1

107-058 KEPS MS1 PCS
KCDH JPM:EPS:PDU A1
'PDU A1 RPC DETAILS'
'JRPCM2'

1. CMD: RPC10 (PDB DMS1) - CLOSE
   OPS: JPM_EPS_PDU_A1_RPC10_(PDB_A_DMS1)_CL
   PUI: JSPX96IM0746K
   EXECUTE

   GMT _____:_____:_____ (HR:MIN:SEC)

2. VERIFY: RPC10 (PDB DMS1) POSN – CL
   PUI: JSDC00FCPH0PJ
   ENG: SYS_PDU_A RPC10 POWER STATUS

RELEASED - Printed documents may be obsolete; validate prior to use.

SECTION IV - OPERATION INSTRUCTIONS

SEQ/STEP	CMD	RESP	DESCRIPTION	VERIF.
			VERIFY PDB-DMS1	
107-059	KEPS	MS1	PCS JPM:EPS:PDB DMS1 'PDB DMS1 RPC DETAILS' 'PDB DMS1' VERIFY 1. DATA FRAME STATUS – CURRENT PUI: JSDC00SWP520J ENG: PDB_DMS1 DF STATUS 2. HEALTH SUMMARY – BLANK (NORMAL) PUI: JSDC00FCP500J ENG: PDB_DMS1 HEALTH STATUS SUMMARY 3. PDB DMS1 RPC7 POSN - CL PUI: JSDC00FCP50IJ ENG: PDB_DMS1 RPC7 POWER STATUS 4. PDB DMS1 RPC1 POSN - CL PUI: JSDC00FCP50CJ ENG: PDB_DMS1 RPC1 POWER STATUS	
107-060	KEPS		TCMS PDB DMS1:JPM EPS PDB DMS1 RECORD: PDB-DMS1 INPUT VOLTAGE _____ (BD) ENG: PDB-DMS1 INPUT VOLTAGE PUI: JSDC00FCP510V	

RELEASED - Printed documents may be obsolete; validate prior to use.

SECTION IV - OPERATION INSTRUCTIONS

SEQ/STEP	CMD	RESP	DESCRIPTION	VERIF.
			VERIFY JCP A	
107-061	KCDH	MS1	PCS JPM:JEM CDH:JCP-A 'STANDBY JCP' VERIFY: 1. STANDBY JCP – HOT_STAND_BY ENG: STAND_BY_JCP MODE PUI: JSDC00SWZC10J 2. STBY JCP INT PWR SW POSN – CL ENG: STAND_BY_JCP CNTLR POWER STATUS PUI: JSDC00SWZC1AJ 3. FATAL ERROR – UNOCCURANCE ENG: STAND_BY_JCP FATAL ERROR STATUS PUI: JSDC00SWZC1BJ	
107-062	KCDH	MS1	PCS JPM:CDH VERIFY: JEM MODE – STANDARD ENG: JEM_MODE PUI: JSDC00SWZ601J ~OMRSD A3000MI.100-C (PARTIAL CDH JCP A)	
			PERFORM EPS MEASUREMENTS	
			NOTE QUIET TIME IS REQUIRED DURING CONDUCTED EMISSIONS/VOLTAGE RIPPLE AND POWER QUALITY MEASUREMENTS.	
107-063	PTC	KEPS DKQM	PERFORM POWER QUALITY AND EME MEASUREMENTS FOR NODE2/JEM LOAD CONFIGURATION II PER EPS A-STRING POWER QUALITY AND EME R0031V2 SEQUENCE 110 TASK II REPORT COMPLETION. START GMT _____:_____:_____ (DAY:HR:MIN) COMPLETE GMT _____:_____:_____ (DAY:HR:MIN)	
				NV:_____
107-064	KEPS	PTC	OK TO PROCEED WITH SEQUENCE	

RELEASED - Printed documents may be obsolete; validate prior to use.

SECTION IV - OPERATION INSTRUCTIONS

SEQ/STEP	CMD	RESP	DESCRIPTION	VERIF.

SHUTDOWN JCP_A (COLD STANDBY)

NOTE

IN THE FOLLOWING STEP THE ENUMERATION FOR PUI JSDC00SWZC10J HAS CHANGED IN THE MAY STADARD OUT AND THEREFORE MAY CHANGE ON PCS. THE VALUE SEEN FOR RAW VALUE OF 4 MAY READ COLD_STBD (MAY STD OUT) AND IS EQUIVALENT TO SECONDARY_POWER_OFF (DEC STD OUT).

107-065 KCDH MS1 PCS
JPM: CDH
'STANDBY JCP'

1. CMD: STBY JCP SHUTDOWN
   ENG: JPM_CDH_JCP_A_SHUTDN
   PUI: JSDD96IM0264K
   EXECUTE

   GMT _____:_____:_____ (HR:MIN:SEC)

   VERIFY:
2. STANDBY JCP – COLD STDBY
   ENG: STAND_BY_JCP MODE
   PUI: JSDC00SWZC10J

3. STBY JCP INT PWR SW POSN – OP
   ENG: STAND_BY_JCP CNTLR POWER STATUS
   PUI: JSDC00SWZC1AJ

~OMRSD A3000MI.100-C (PARTIAL CDH JCP A)

RELEASED - Printed documents may be obsolete; validate prior to use.

SECTION IV - OPERATION INSTRUCTIONS

SEQ/STEP	CMD	RESP	DESCRIPTION	VERIF.
			ACTIVATE A STRING TCS/ECLSS SENSORS	
			POWER ON JPM CABIN PRESSURE SENSOR A1, A2	
107-066	KECL	MS1	PCS JPM:EPS:PIB_A1 PIB A1 RPC DETAILS '15V/0.05A' 1. CMD: SWITCH 8 (JPM CABIN PRESS SNSR A1) – CLOSE OPS: JPM_EPS_PIB_A1_15V_SW08_(JPM_CABIN_PRESS_SNSR_A1)_CL PUI: JSPX96IM0638K GMT _____:_____:_____ (HR:MIN:SEC) 2. VERIFY: SWITCH 8 (JPM CABIN PRESS _SNSR A1) POSN - CL ENG: PIB_A1 15V SW8 POWER STATUS PUI: JSDC00FCPC1VJ	

RELEASED - Printed documents may be obsolete; validate prior to use.

SECTION IV - OPERATION INSTRUCTIONS

SEQ/STEP	CMD	RESP	DESCRIPTION	VERIF.
107-067	KECL	MS1	PCS JPM:ECLSS JPM ECLSS ‘CABIN PRESS 1’ RECORD/VERIFY: CABIN PRESS 1 - _____MMHG (>727 MMHG) ENG: PM_CABIN_PRESS1 PUI: JSDC00FCE410P ~OMRSD A3000MI.100-C (ECLSS CPS A1)	
107-068	KECL	MS1	PCS JPM:EPS:PIB_A1 PIB A1 RPC DETAILS ‘15V/0.05A’ 1. CMD: SWITCH 1 (JPM CABIN PRESS SNSR A2) - CLOSE OPS: JPM_EPS_PIB_A1_15V_SW01_(JPM_CABIN_PRESS_S NSR_A2)_CL PUI: JSPX96IM0637K GMT _____:_____:_____ (HR:MIN:SEC) 2. VERIFY: SWITCH 1 (JPM CABIN PRESS SNSR2) POSN – CL ENG: PIB_A1 15V SW1 POWER STATUS PUI: JSDC00FCPC1OJ	
107-069	KECL	MS1	PCS JPM;ECLSS JPM ECLSS ‘CABIN PRESS 2’ RECORD/VERIFY: CABIN PRESS 2 - _____MMHG (>727 MMHG) ENG: PM_CABIN_PRESS2 PUI: JSDC00FCE400P ~OMRSD A3000MI.100-C (ECLSS CPS A2)	

RELEASED - Printed documents may be obsolete; validate prior to use.

SECTION IV - OPERATION INSTRUCTIONS

SEQ/STEP	CMD	RESP	DESCRIPTION	VERIF.
			POWER ON MTL EQUIP A DP SENSOR A	
107-070	KTCS	MS1	PCS JPM:EPS:PIB A2 'PIB A2 SWITCH DETAILS' '15V/0.05A' 1. CMD: SWITCH 9 (MTL EQUIP A DP SNSR A) - CLOSE PUI: JSTE96IM0155K OPS: JPM_EPS_PIB_A2_15V_SW09_(MTL_EQUIP_A_DP_SNSR_A)_CL GMT _____:_____:_____ (HR:MIN:SEC) 2. VERIFY: SWITCH 9 POSN – CL ENG: PIB_A2 15V SW9 POWER STATUS PUI: JSDC00FCPD1WJ	

RELEASED - Printed documents may be obsolete; validate prior to use.

SECTION IV - OPERATION INSTRUCTIONS

SEQ/STEP	CMD	RESP	DESCRIPTION	VERIF.
107-071	KTCS	MS1	PCS JPM:TCS 'JPM ATCS OVERVIEW' 'LOOP' RECORD: MTL LOOP DP A:_____(> 51.6 KPA) OPS: JPM_ATCS_MTL_EQUIP_A_DP_A PUI: JSDC00FCT000P **POWER ON LTL EQUIP A DP SENSOR A**	
107-072	KTCS	MS1	PCS JPM:EPS:PIB A2 'PIB A2 SWITCH DETAILS' '15V/0.05A' 1. CMD: SWITCH 8 (LTL DP SNSR A) - CLOSE PUI: JSTE96IM0154K OPS: JPM_EPS_PIB_A2_15V_SW08_(LTL_EQUIP_A_DP_SNSR_A)_CL GMT _____:_____:_____ (HR:MIN:SEC) 2. VERIFY: SWITCH 8 POSN – CL ENG: PIB_A2 15V SW8 POWER STATUS PUI: JSDC00FCPD1VJ	
107-073	KTCS	MS1	PCS: JPM:TCS 'JPM ATCS OVERVIEW' 'LOOP' RECORD: LTL LOOP DP A:_____(> 51.6 KPA) OPS: JPM_ATCS_LTL_EQUIP_A_DP_A PUI: JSDC00FCT020P	

RELEASED - Printed documents may be obsolete; validate prior to use.

SECTION IV - OPERATION INSTRUCTIONS

SEQ/STEP	CMD	RESP	DESCRIPTION	VERIF.
			POWER ON JEFHX FLOW RATE SENSOR A	
107-074	KTCS	MS1	PCS JPM:EPS:PIB A2 'PIB A2 SWITCH DETAILS' '120V/0.5A' 1. CMD: SW 35 (MTL JEFHX IN FRS A) - CLOSE ENG: JPM_EPS_PIB_A2_120V_L_SW35_(MTL JEFHX IN FRSA)_CL PUI: JSTE96IM0168K GMT _____:_____:_____ (HR:MIN:SEC) 2. VERIFY: SW35 POSN – CL ENG: PIB_A2 120V_L SW35 POWER STATUS PUI: JSDC00FCPD2YJ	
			POWER ON LTL BYPASS FLOW RATE SENSOR A	
107-075	KTCS	MS1	PCS JPM:EPS:PIB A1 'PIB A1 SWITCH DETAILS' '120V/0.5A' 1. CMD: SW 38 (LTL BYP LINE FRS A) – CLOSE ENG: JPM_EPS_PIB_A1_120V_L_SW38_ (LTL_BYP_LINE_FRS_A)_CL PUI: JSTE96IM0132K GMT _____:_____:_____ (HR:MIN:SEC) 2. VERIFY: SW38 POSN – CL ENG: PIB_A1 120V_L SW38 POWER STATUS PUI: JSDC00FCPC31J	

RELEASED - Printed documents may be obsolete; validate prior to use.

SECTION IV - OPERATION INSTRUCTIONS

SEQ/STEP	CMD	RESP	DESCRIPTION	VERIF.
			SELECT FAS/LIMIT SET FOR MTL DIFFERENTIAL PRESS	
107-076	KTCS	SSFE	CES MATE LOAD AND RUN MATE SCRIPT MEIT3_MATE_CMDS INDEX: 0X0056 CMD: JPM_CDH_ACTIVE_JCP_EVENT_LIM_SET_NUM_SEL_TMPLT PUI: JSDD96IM0224K PARAMETER: 414 (MTL DIFFERENTIAL PRESSURE LOW(A)) PARAMETER: 1 GMT _____:_____:_____ (HR:MIN:SEC)	
107-077	KTCS		TCMS VERIFY: LIMIT SET(MTL DIFFERENTIAL PRESSURE LOW(A)) - 1 PUI: JSDC00SWZ28AU	
			SELECT FAS/LIMIT SET FOR LTL DIFFERENTIAL PRESS	
107-078	KTCS	SSFE	CES MATE LOAD AND RUN MATE SCRIPT MEIT3_MATE_CMDS INDEX: 0X0057 CMD: JPM_CDH_ACTIVE_JCP_EVENT_LIM_SET_NUM_SEL_TMPLT PUI: JSDD96IM0224K PARAMETER: 416 (LTL DIFFERENTIAL PRESSURE LOW(A)) PARAMETER: 1 GMT _____:_____:_____ (HR:MIN:SEC)	
107-079	KTCS		TCMS VERIFY: LIMIT SET(LTL DIFFERENTIAL PRESSURE LOW(A)) - 1 PUI: JSDC00SWZ28BU	

RELEASED - Printed documents may be obsolete; validate prior to use.

SECTION IV - OPERATION INSTRUCTIONS

SEQ/STEP	CMD	RESP	DESCRIPTION	VERIF.
			ACTIVATE PDB TCS1, PUMP INVERTER, TAC-L	
			ACTIVATE PDB TCS 1	
107-080	KEPS	SSFE	CES MATE LOAD AND RUN MATE SCRIPT MEIT3_MATE_CMDS INDEX: 0X00C0 CMD PDU A1 RPC 6 (PDB TCS1) - CLOSE PUI: JSTE96IM0220K OPS: JPM_EPS_PDU_A1_RPC06_(PDB_A_TCS1)_CL GMT _____:_____:_____ (HR:MIN:SEC)	
107-081	KEPS	MS1	PCS JPM:EPS:PDU A1 'PDU_A1_RPC_DETAILS' 'JRPCM1' VERIFY: RPC 6 (PDB TCS1) POSN – CL PUI: JSDC00FCPH0LJ ENG: SYS_PDU_A RPC6 POWER STATUS	
107-082	KEPS	MS1	PCS:JPM:EPS:PDB TCS 1 'PDB TCS 1 RPC DETAILS' 'PDB TCS1' VERIFY: 1. DATA FRAME STATUS – CURRENT PUI: JSDC00SWP920J ENG: PDB_TCS1_DF_STATUS 2. HEALTH SUMMARY – BLANK (NORMAL) ENG: PDB_TCS1_HEALTH_STATUS_SUMMARY PUI: JSDC00FCP900J	

RELEASED - Printed documents may be obsolete; validate prior to use.

SECTION IV - OPERATION INSTRUCTIONS

SEQ/STEP	CMD	RESP	DESCRIPTION	VERIF.
107-083	KEPS		TCMS PDB TCS1:JPM EPS PDB TCS1 RECORD PDB_TCS1 INPUT VOLTAGE _____ (BD) ENG: PDB_TCS1 INPUT VOLTAGE PUI: JSDC00FCP910V	
			ACTIVATE PUMP INVERTER	
107-084	KTCS	MS1	PCS:JPM:EPS:PDB TCS 1 'PDB TCS 1 RPC DETAILS' 1. CMD: RPC 4 (TCA L PMP INV) - CLOSE PUI: JSPX96IM0590K OPS: JPM_EPS_PDB_A_TCS1_RPC04_(TCA_L_PUMP_A_INV)_CL GMT _____:_____:_____ (HR:MIN:SEC) 2. VERIFY: RPC 4 (TCA L PMP INV) POSN – CL PUI: JSDC00FCP90FJ ENG: PDB_TCS1 RPC4 POWER STATUS **NOTE** TCA_L HEALTH STATUS SUMMARY MAY INDICATE "ERROR" AND TCA_L LTL CNTRL TEMP STATUS MAY INDICATE "ABNORMAL" IF COOLANT TEMPERATURE IS OUT OF NORMAL RANGE(1-8 DEG C), THESE ARE FOR INFORMATION PURPOSES ONLY. **NOTE** TAC-L TAKES 2 MINUTES FOR BIT. DIU EPS1 HEALTH STATUS SUMMARY AND DIU EPS1/TCA L COMM ERROR WILL TEMPORARILY INDICATE SUMMARY ERROR AND ABNORMAL DUE TO COMM START BEFORE POWER ON BIT IS COMPLETE.	
			ACTIVATE TCA L TAC	
107-085	KTCS	MS1	PCS JPM:EPS:PDB TCS 1 'PDB TCS 1 RPC DETAILS' CMD: RPC 2 (TCA L TAC A) – CLOSE PUI: JSPX96IM0589K OPS: JPM_EPS_PDB_A_TCS1_RPC02_(TCA_L_TAC_A)_CL GMT _____:_____:_____ (HR:MIN:SEC)	

RELEASED - Printed documents may be obsolete; validate prior to use.

SECTION IV - OPERATION INSTRUCTIONS

SEQ/STEP	CMD	RESP	DESCRIPTION	VERIF.
107-086	KTCS	MS1	PCS JPM:TCS:JPM ATCS LTL 'JPM ATCS LTL' VERIFY: 'TCA L' 'TAC' 1. PDB RPC 2 POSN – ON PUI: JSDC00FCP90DJ ENG: PDB_TCS1 RPC2 POWER STATUS 2. TAC PWR ON BIT RESULT – NORMAL PUI: JSDC00FCTA0NJ ENG: TCA_L TAC POWER_ON BIT RESULT 3. HEALTH STAT – NORMAL PUI: JSDC00FCTA0CJ ENG: TCA_L TAC HEALTH STATUS 4. ACCUMULATOR HEALTH STAT – NORMAL TCA_L ACCUMULATOR HEALTH STATUS PUI: JSDC00FCTA0EJ	

RELEASED - Printed documents may be obsolete; validate prior to use.

SECTION IV - OPERATION INSTRUCTIONS

SEQ/STEP	CMD	RESP	DESCRIPTION	VERIF.
107-087	KTCS		TCMS	

1. TAC TEMP STAT - NORMAL
   TCA_L TAC TEMP STATUS
   PUI: JSDC00FCTA13J

2. GAS SUPPLY VALVE HEALTH STAT - NORMAL
   TCA_L GAS SUPPLY VALVE HEALTH STATUS
   PUI: JSDC00FCTA0FJ

3. HEALTH STAT - NORMAL
   ENG: TCA_L PUMP HEALTH STATUS
   PUI: JSDC00FCTA0DJ

4. PUMP TEMP STATUS - NORMAL
   TCA_L PUMP INVERTER TEMP STATUS
   PUI: JSDC00FCTA14J

5. ACCUMULATOR INLET VALVE STAT - NORMAL
   TCA_L ACCUMULATOR INLET VALVE STATUS
   PUI: JSDC00FCTA15J

6. DATA FRAME STAT – CURRENT
   TCA-L DF STATUS
   PUI: JSDC00SWTA30J

VERIFY CRITICAL PRE-START PARAMETERS

107-088 KTCS MS1 PCS
JPM:TCS
'JPM :ATCS OVERVIEW'

'TCA' 'TCA L'

RECORD/VERIFY THE FOLLOWING CRITICAL PARAMETERS:

NOMENCLATURE	ACTUAL VALUE	EXPECTED VALUE	PUI
ACCUM WATER VOL 1		0.66-4.7 L	JSDC00FCTA02Q
ACCUM WATER VOL 2		0.66-4.7 L	JSDC00FCTA03Q

RELEASED - Printed documents may be obsolete; validate prior to use.

SECTION IV - OPERATION INSTRUCTIONS

SEQ/STEP	CMD	RESP	DESCRIPTION	VERIF.
			SET TCA L LTL TCV CONTROL PARAMETERS	
107-089	KTCS		TCMS VERIFY: TCA_L LTL_TEMP_UPPER_LIMIT_VALUE - 8.0 C PUI: JSDC00FCTA1AT	
107-090	KTCS	SSFE	CES MATE LOAD AND RUN MATE SCRIPT MEIT3_MATE_CMDS INDEX: 0X00CE CMD JPM_ATCS_TCA_L_LTL_TWMV_A_TEMP_CNTL_PARAM_SET_ TMPLT PUI: JSTE96IM0303K PARAMETER 1: HALF OF DEADBAND (THB): 0.0 DEGC PARAMETER 2: HALF OF PROPORTIONAL BAND(TPB): 16 DEGC PARAMETER 3: EXPONENT FOR FLOATING CONTROLLER ACTION (X): 1 PARAMETER 4: REFERENCE TEMPERATURE (TSET):4.5 DEGC PARAMETER 5: VALVE MAX SPEED: 6.505 DEG/SEC PARAMETER 6: VALVE MIN SPEED: 0.30 DEG/SEC PARAMETER 7: DERIVATIVE GAIN: 4 PARAMETER 8: TEMPERATURE UPPER LIMIT: 8.1 DEGC PARAMETER 9: TEMPERATURE LOWER LIMIT: 1.0 DEGC PARAMETER 10: MARGIN BETWEEN TEMPERATURE SENSORS: 3.0 DEGC PARAMETER 11: TEMPERATURE SENSOR ELECTRICAL RESISTANCE CHA_A: 3.96 PARAMETER 12: TEMPERATURE SENSOR ELECTRICAL RESISTANCE CHA_B: 1002 GMT _____:_____:_____ (HR:MIN:SEC)	

RELEASED - Printed documents may be obsolete; validate prior to use.

SECTION IV - OPERATION INSTRUCTIONS

SEQ/STEP	CMD	RESP	DESCRIPTION	VERIF.
107-091	KTCS		TCMS VERIFY: 1. TCA_L LTL_TEMP_CNTRL_TARGET_VALUE - 4.5 C PUI: JSDC00FCTA19T 2. TCA_L LTL_TEMP_UPPER_LIMIT_VALUE - 8.1 C PUI: JSDC00FCTA1AT 3. TCA_L LTL_TEMP_LOWER_LIMIT_VALUE - 1.0 C PUI: JSDC00FCTA1BT 4. TCA_L LTL_TEMP_SENSOR_DIFFERENCE_LIMIT_VALUE - 3.0 C PUI: JSDC00FCTA1CT **SET TCA L MTL TCV CONTROL PARAMETERS**	
107-092	KTCS		TCMS VERIFY: TCA_L MTL_TEMP_LOWER_LIMIT_VALUE – 13.0 C PUI: JSDC00FCTA17T	

RELEASED - Printed documents may be obsolete; validate prior to use.

SECTION IV - OPERATION INSTRUCTIONS

SEQ/STEP	CMD	RESP	DESCRIPTION	VERIF.
107-093	KTCS	SSFE	CES MATE LOAD AND RUN MATE SCRIPT MEIT3_MATE_CMDS INDEX: 0X00CF CMD SET TCA_L_MTL_PARAMETERS ENG: JPM_ATCS_TCA_L_MTL_TWMV_A_TEMP_CNTL_PARAM_SET_ TMPLT PUI: JSTE96IM0304K PARAMETER 1: HALF OF DEADBAND (THB): 0.0 DEGC PARAMETER 2: HALF OF PROPORTIONAL BAND(TPB): 16 DEGC PARAMETER 3: EXPONENT FOR FLOATING CONTROLLER ACTION (X): 1 PARAMETER 4: REFERENCE TEMPERATURE TSET):17.2 DEGC PARAMETER 5: VALVE MAX SPEED: 6.505 DEG/SEC PARAMETER 6: VALVE MIN SPEED: 0.30 DEG/SEC PARAMETER 7: DERIVATIVE GAIN: 4 PARAMETER 8: TEMPERATURE UPPER LIMIT: 22.0 DEGC PARAMETER 9: TEMPERATURE LOWER LIMIT: 12.9 DEGC PARAMETER 10: MARGIN BETWEEN TEMPERATURE SENSORS: 3.0 DEGC PARAMETER 11: TEMPERATURE SENSOR ELECTRICAL RESISTANCE CHA_A: 3.95 PARAMETER 12: TEMPERATURE SENSOR ELECTRICAL RESISTANCE CHA_B: 1002 GMT _____:_____:_____ (HR:MIN:SEC)	

RELEASED - Printed documents may be obsolete; validate prior to use.

SECTION IV - OPERATION INSTRUCTIONS

SEQ/STEP	CMD	RESP	DESCRIPTION	VERIF.
107-094	KTCS		TCMS VERIFY: 1. TCA_L MTL_TEMP_CNTRL_TARGET_VALUE - 17.2 C PUI: JSDC00FCTA1FT 2. TCA_L MTL_TEMP_UPPER_LIMIT_VALUE - 22.0 C PUI: JSDC00FCTA1GT 3. TCA_L MTL_TEMP_LOWER_LIMIT_VALUE - 12.9 C PUI: JSDC00FCTA17T 4. TCA_L MTL_TEMP_SENSOR_DIFFERENCE_LIMIT_VALUE - 3.0 C PUI: JSDC00FCTA18T **OPEN FWD N2 SUPPLY VALVE**	
107-095	KECL	MS1	PCS JPM:ECLSS:JPM ESS:PIB A1 SWITCH DETAILS PIB A1 SWITCH DETAILS ‘120V/0.5A’ 1. CMD: SWITCH 1 (GN2 STBD DECK SOV A) - CLOSE OPS: JPM_EPS_PIB_A1_120V_L_SW01_(N2_STBD_DECK_SOV_A)_CL PUI: JSPX96IM0639K GMT _____:_____:_____ (HR:MIN:SEC) 2. VERIFY: SWITCH 1 (GN2 STBD DECK SOV A) POSN - CL ENG: PIB_A1 120V_L SW1 POWER STATUS - CL PUI: JSDC00FCPC20J	

RELEASED - Printed documents may be obsolete; validate prior to use.

SECTION IV - OPERATION INSTRUCTIONS

SEQ/STEP	CMD	RESP	DESCRIPTION	VERIF.

NOTE

FWD N2 SUPPLY VALVE IS NOT MOVED BY THESE STEPS BECAUSE VALVE ALREADY IS OPEN BEFORE THESE STEPS FOR PROVIDED N2 GAS TO ACCUMLATOR.

107-096 KECL MS1 PCS
JPM:ECLSS:JPM ESS
JPM ESS

'GAS SUPPLY'

1. CMD: STBD FWD SOV POSITION - OPEN
   OPS: JPM_ESS_GN2_STBD_FWD_SOV_A_OP
   PUI: JSEP96IM0017K

   GMT _____:_____:_____ (HR:MIN:SEC)

VERIFY/RECORD:

NOTE

THE PCS DISPLAY HAS THE TWO VALVE POSITIONS SWAPPED (FWD LABELED AFT, AFT LABELED FWD). WHEN VERIFYING VALVE POSITIONS, CHECK THE OPPOSITE FIELD ON THE PCS, AND ALSO VERIFY ON TCMS (WHICH IS CORRECTLY LABELED). THIS IS DOCUMENTED IN _____. SUBSTEP 3 BELOW IS FOR INFORMATIONAL PURPOSES ONLY.

2. STBD FWD SOV POSITION (STACK) - OPEN
   ENG: FWD_N2_SUPPLY_VALVE STACK POSTN
   PUI: JSDC00SWK411J

3. STBD AFT SOV POSITION (STACK) _____ (BD)
   ENG: AFT_N2_SUPPLY_VALVE STACK POSTN
   PUI: JSDC00SWK401J

4. SWITCH 1 POSN - OP
   ENG: PIB_A1 120V_L SW1 POWER STATUS
   PUI: JSDC00FCPC20J

RELEASED - Printed documents may be obsolete; validate prior to use.

SECTION IV - OPERATION INSTRUCTIONS

SEQ/STEP	CMD	RESP	DESCRIPTION	VERIF.
			VERIFY VALVE CONFIGURATION	
107-097	KTCS	MS1	PCS JPM:EPS:PIB A1 'PIB A1 SWITCH DETAILS' '120V/0.5A' CMD: SW16 (LTL IFHX BYP VLV A) - CLOSE ENG: JPM_EPS_PIB_A1_120V_L_SW16_ (LTL_IFHX_BYP_VLV_A)_CL PUI: JSTE96IM0125K GMT _____:_____:_____ (HR:MIN:SEC)	
107-098	KTCS	MS1	PCS JPM:TCS:JPM ATCS LTL 'JPM ATCS LTL' 'LTL' 'IFHX H20 BYPASS VALVE' VERIFY: PIB_A1 120V_L SW16 POSN - ON PUI: JSDC00FCPC2FJ	
107-099	KTCS	SSFE	CES MATE LOAD AND RUN MATE SCRIPT MEIT3_MATE_CMDS INDEX: 0X0137 CMD: POSN CHECK/SET OPS: JPM_ATCS_LTL_IFHX_BYP_VLV_A_POSN_SEL_TMPLT PUI: JSTE96IM0278K PARAMETER: 3 (POSITION CHECK) GMT _____:_____:_____ (HR:MIN:SEC)	

RELEASED - Printed documents may be obsolete; validate prior to use.

SECTION IV - OPERATION INSTRUCTIONS

SEQ/STEP	CMD	RESP	DESCRIPTION	VERIF.
107-100	KTCS	MS1	PCS JPM:TCS:JPM ATCS LTL 'JPM ATCS LTL' 'LTL' 'IFHX H20 BYPASS VALVE' VERIFY: 1 VALVE POSITION – IFHX ENG: JPM_ATCS_LTL_IFHX_BYP_VLV_A_POSN_(STACK) PUI: JSDC00SWT5Q1J 2. PIB_A1_120V_L_SW16 POSN - OFF OPS: PIB_A1 120V_L SW16 POWER STATUS PUI: JSDC00FCPC2FJ **ACTIVATE ATCS LOOP CROSS-OVER VALVE**	
107-101	KTCS	MS1	PCS JPM:EPS:PIB A1 'PIB A1 SWITCH DETAILS' '120V/0.5A' 1. CMD: SW17 (JLCV A) - CLOSE ENG: JPM_EPS_PIB_A1_120V_L_SW17_(JLCV_A)_CL PUI: JSPX96IM0641K GMT _____:_____:_____ (HR:MIN:SEC) 2. VERIFY: SW17 POSN - CL PUI: JSDC00FCPC2GJ	
107-102	KTCS	MS1	PCS JPM:EPS:PIB B1 'PIB B1 SWITCH DETAILS' '120V/0.5A' 1. CMD: SW12 (JLCV B) - CLOSE ENG: JPM_EPS_PIB_B1_120V_L_SW12_(JLCV_B)_CL PUI: JSTE96IM0196K GMT _____:_____:_____ (HR:MIN:SEC) 2. VERIFY: SW12 POSN -CL PUI: JSDC00FCPE2BJ	

RELEASED - Printed documents may be obsolete; validate prior to use.

SECTION IV - OPERATION INSTRUCTIONS

SEQ/STEP	CMD	RESP	DESCRIPTION	VERIF.

RECONFIGURE ATCS MODE

NOTE

MODE TRANISITION IN THE FOLLOWING STEP WILL TAKE APPROXIMATELY 2 MINUTES.

NOTE

TCA_L HEALTH STATUS SUMMARY MAY INDICATE "ERROR" AND TCA_L LTL MIN PRESS STATUS MAY INDICATE "ABNORMAL" AND CLASS 3 C&W OCCURRENCE FOR PUMP ACTIVATION. THIS IS FOR INFORMATION ONLY.

NOTE

TCA_L HEALTH STATUS SUMMARY MAY INDICATE "ERROR" AND TCA_L LTL CNTRL TEMP STATUS MAY INDICATE "ABNORMAL" IF COOLANT TEMPERATURE IS OUT OF NORMAL RANGE(1-8 DEG C). THIS IS FOR INFORMATION PURPOSES ONLY.

107-103 KTCS MS1 PCS
JPM:TCS:LCA ICON
'JPM ATCS LCA'

1. CMD: TCS MODE – 2WCL
   ENG: JPM_ATCS_JLCA_TCS_MODE_SEL_TMPLT
   PUI: JSTE96IM0331K

GMT _____:_____:_____ (HR:MIN:SEC)

VERIFY:
2. TCS MODE – 2WCL
   OPS: JPM_ATCS_TCS_MODE
   PUI: JSDC00SWZ60IJ

'LOOP CROSSOVER ASSEMBLY' 'VALVE A'

3. VALVE A POSN - 2WCL
   OPS: 1WCL/2WCL_VALVE_A STACK POSTN
   PUI: JSDC00SWT511J

'LOOP CROSSOVER ASSEMBLY' 'VALVE B'

4. VALVE B POSN - 2WCL
   OPS: 1WCL/2WCL_VALVE_B STACK POSTN
   PUI: JSDC00SWT5D1J

~OMRSD A3000MI.100-C (TCS-3)

RELEASED - Printed documents may be obsolete; validate prior to use.

SECTION IV - OPERATION INSTRUCTIONS

SEQ/STEP	CMD	RESP	DESCRIPTION	VERIF.
107-104	KTCS	MS1	PCS JPM:TCS 'JPM ATCS OVERVIEW' 'TCA' VERIFY TCA_L PUMP SPEED - 6430 ± 329 RPM PUI: JSDC00FCTA1WR	
107-105	KTCS	MS1	PCS JPM:TCS:JPM ATCS MTL 'JPM ATCS MTL' 'MTL' 'TCV B' 1. VERIFY: OPER STAT - EXEC OPS: TCA_M MTL TEMP CNTRL EXECUTING STATUS PUI: JSDC00FCTC0IJ 'TCA' 'TCA M' 2. VERIFY: PUMP SPEED IS 5500 +/- 329 RPM PUI: JSDC00FCTC0R **NOTE** ALTHOUGH PCS SUPPORTS LTL PUMP OPERATION STAT VERIFICATION, IT MAY HAVE THE WRONG PUI. IT MAY BE FIXED IN EC-2 RELEASE.	
107-106	KTCS	MS1	PCS JPM:TCS:JPM ATCS LTL JPM ATCS LTL PUMP VERIFY: OPERATION – EXECUTING OPS: TCA_L LTL EXECUTING STATUS PUI: JSDC00FCTA0IJ	
107-107	KTCS	MS1	PCS JPM:TCS:JPM ATCS LTL 'JPM ATCS LTL' 'TCA L' 'PUMP' VERIFY: INLET VALVE POSN - OP OPS: TCA_L ACCUMULATOR INLET VALVE POSTN PUI: JSDC00FCTA1YJ	

RELEASED - Printed documents may be obsolete; validate prior to use.

SECTION IV - OPERATION INSTRUCTIONS

SEQ/STEP	CMD	RESP	DESCRIPTION	VERIF.
107-108	KTCS		TCMS VERIF Y: 1. TCA_L MTL TEMP CNTRL VALVE POSTN - BYPASS PUI: JSDC00FCT500J 2. TCA_L LTL PRESS CNTRL EXECUTING STATUS - EXECUTING PUI: JSDC00FCTA0MJ 3. LTL TCV A TCA L LTL TEMP CNTL OPER STAT - EXEC OPS: TCA_L LTL TEMP CNTRL EXECUTING STATUS PUI: JSDC00FCTA0KJ ~OMRSD A3000MI.100-C (TCS-2) **SET TCA-M PUMP SPEED**	
107-109	KTCS	MS1	PCS JPM:TCS:JPM ATCS MTL 'JPM ATCS MTL' 'TCA M' 'PUMP' 1. ENTER: SPEED SET – 4850 RPM 2. CMD: SPEED SET - SET PUI: JSTE96IM0323K OPS: JPM_ATCS_TCA_M_PUMP_B_SPD_SET_TMPLT GMT _____:_____:_____ (HR:MIN:SEC)	

RELEASED - Printed documents may be obsolete; validate prior to use.

SECTION IV - OPERATION INSTRUCTIONS

SEQ/STEP CMD RESP DESCRIPTION VERIF.

VERIFY TCA-M HEALTH AND STATUS

NOTE

IN THE FOLLOWING STEP, PUMP DIFF PRESS AND TOTAL FLOW SHALL BE VERIFIED BY KTCS AND NASDA ACCORDING TO APPENDIX M FIGURE M-1 (TCA-M) IN APPENDIX M.

107-110 KTCS MS1 PCS
JPM:TCS
'JPM ATCS OVERVIEW'

RECORD/VERIFY THE FOLLOWING PARAMETERS:

NOMENCLATURE	ACTUAL VALUE	EXPECTED VALUE	PUI
'TCA M' PUMP SPEED		4850 +/-329 RPM	JSDC00FCTC1OR
'TCA M'ACCUM WATER VOL 1		0.66-4.7 L	JSDC00FCTC02Q
'TCA M'ACCUM WATER VOL 2		0.66-4.7 L	JSDC00FCTC03Q
'TCA M'ACCUM WATER PRESS 1		134.0-282.1 KPA	JSDC00FCTC00P
'TCA M'ACCUM WATER PRESS 2		106.9-282.1 KPA	JSDC00FCTC01P
'TCA M' PUMP DP		IN OPERATIONAL RANGE (REF APPENDIX M FIGURE M-1)	JSDC00FCTC1NP
'TCA M' PUMP OUT FLOW RATE		IN OPERATIONAL RANGE (REF APPENDIX M FIGURE M-1)	JSDC00FCTC0VR
'MTL' LOOP DP A		> 51.6 KPAD	JSDC00FCT000P
'MTL' LOOP DP B		> 51.6 KPAD	JSDC00FCT010P
'MTL' JEFHX IN FLOW RATE A		< 45 KG/HR	JSDC00FCT100R
'MTL' JEFHX IN FLOW RATE B		> 100 KG/HR	JSDC00FCT180R
'TCA M' PUMP IN FLTR DP		<14.7 KPAD	JSDC00FCTC05P

RELEASED - Printed documents may be obsolete; validate prior to use.

SECTION IV - OPERATION INSTRUCTIONS

SEQ/STEP CMD RESP DESCRIPTION VERIF.

VERIFY TCA-L HEALTH AND STATUS

NOTE

IN THE FOLLOWING STEP, PUMP DIFF PRESS AND TOTAL FLOW SHALL BE VERIFIED BY KTCS AND NASDA ACCORDING TO APPENDIX M FIGURE M-2 (TCA-L) IN APPENDIX M.

107-111 KTCS MS1 PCS
JPM:TCS
'JPM ATCS OVERVIEW'

RECORD/VERIFY THE FOLLOWING PARAMETERS:

NOMENCLATURE	ACTUAL VALUE	EXPECTED VALUE	PUI
'TCA L'ACCUM WATER VOL 1		0.66-4.7 L	JSDC00FCTA02Q
'TCA L'ACCUM WATER VOL 2		0.66-4.7 L	JSDC00FCTA03Q
'TCA L'ACCUM WATER PRESS 1		134.0-282.1 KPA	JSDC00FCTA00P
'TCA L'ACCUM WATER PRESS 2		106.9-282.1 KPA	JSDC00FCTA01P
'TCA L' PUMP DP		IN OPERATIONAL RANGE (REF APPENDIX M APPENDIX M FIGURE M-2) & > 20 KPAD	JSDC00FCTA1VP
'TCA L' PUMP OUT FLOW RATE		IN OPERATIONAL RANGE (REF APPENDIX M APPENDIX M FIGURE M-2)	JSDC00FCTA0ZR
'LTL' LOOP DP A		BD	JSDC00FCT020P
'LTL' LOOP DP B		BD	JSDC00FCT030P

~OMRSD A3000MI.100-C (TCS-1)

RELEASED - Printed documents may be obsolete; validate prior to use.

SECTION IV - OPERATION INSTRUCTIONS

SEQ/STEP	CMD	RESP	DESCRIPTION	VERIF.
107-112	KTCS	MS1	PCS JPM:TCS:JPM ATCS LTL 'JPM ATCS LTL' VERIFY: 'TCA L' 'TCA' 1. HEALTH STATUS - NORMAL OPS: JPM_ATCS_TCA_L_TAC_PKG_A_HEALTH_STAT PUI: JSDC00FCTA0CJ 'TCA L' 'ACCUMULATOR' 2. HEALTH STATUS - NORMAL OPS: JPM_ATCS_TCA_L_ACCUM_HEALTH_STAT PUI: JSDC00FCTA0EJ	
107-113	KTCS		TCMS VERIFY: 1. TCA_L PUMP HEALTH STATUS - NORMAL PUI: JSDC00FCTA0DJ 2. TCA_L GAS SUPPLY VALVE HEALTH STATUS - NORMAL PUI: JSDC00FCTA0FJ 3. TCA_L ACCUMULATOR INLET VALVE STATUS - NORMAL PUI: JSDC00FCTA15J	

RELEASED - Printed documents may be obsolete; validate prior to use.

SECTION IV - OPERATION INSTRUCTIONS

SEQ/STEP	CMD	RESP	DESCRIPTION	VERIF.

ECLSS ACTIVATION

THC_A_ACTIVATION

POWER ON THC A CABIN FAN

NOTE

WHEN THE THC FAN IS ACTIVATED, A PDB A TCS1 RPC01 TRIP WILL OCCUR, THEN THE TRIP STATUS IMMEDIATELY RETURNS TO NORMAL (NO TRIP). WHEN IT TRIPS, THIS ALSO CAUSES THE PDB A TCS1 HEALTH STAT SUM TO INDICATE “ERROR”. HEALTH STATUS SUMMARY ERROR HAS NO IMPACT TO JEM SYSTEMS AND IS RESET BY ACTIVATING THCU A.

107-114 KECL MS1 PCS
JPM:ECLSS:THC A:THC A COMMANDS:PDB TCS1 RPC DETAILS
PDB TCS1 RPC DETAILS

‘PDB TCS1’

1. CMD: RPC 1 (THC A FAN) - CLOSE
   OPS:
   JPM_EPS_PDB_A_TCS1_RPC01_(THC_A_FAN)_CL
   PUI: JSPX96IM0588K

   GMT _____:_____:_____ (HR:MIN:SEC)

2. VERIFY: RPC 1 (THC A FAN) POSN - CL
   ENG: PDB_TCS1 RPC1 POWER STATUS
   PUI: JSDC00FCP90CJ

RELEASED - Printed documents may be obsolete; validate prior to use.

SECTION IV - OPERATION INSTRUCTIONS

SEQ/STEP	CMD	RESP	DESCRIPTION	VERIF.

NOTE

NEXT STEP IS JUST CONFIRMATION FOR THE CHARACTERISTICS OF THE THC FAN POWERING ON.

107-115 KECL MS1

PCS
JPM:ECLSS:THC A:THC A COMMANDS:PDB TCS1 RPC DETAILS
PDB TCS1 RPC DETAILS

RECORD: PDB TCS1 HEALTH SUMMARY - _____ (BD)
ENG: PDB_TCS1 HEALTH STATUS SUMMARY
PUI: JSDC00FCP900J

POWER ON THCU A

107-116 KECL MS1

PCS
JPM::ECLSS:THC A:THC A COMMANDS:PDB TCS1 RPC DETAILS
PDB TCS1 RPC DETAILS

‘PDB TCS1’

1. CMD: RPC 5 (THCU A) - CLOSE
   OPS: JPM_EPS_PDB_A_TCS1_RPC05_(THCU_A)_CL
   PUI: JSPX96IM0591K

   GMT _____:_____:_____ (HR:MIN:SEC)

2. VERIFY: RPC 5 (THCU A) POSN - CL
   ENG: PDB_TCS1 RPC5 POWER STATUS
   PUI: JSDC00FCP90GJ

RELEASED - Printed documents may be obsolete; validate prior to use.

SECTION IV - OPERATION INSTRUCTIONS

SEQ/STEP	CMD	RESP	DESCRIPTION	VERIF.
			NOTE WAIT 80 SECONDS UNTIL THCU A POWER-ON-BIT IS FINISHED	
107-117	KECL	MS1	PCS JPM:ECLSS:THC A:THC A COMMANDS JPM THC A COMMANDS 'STATUS' VERIFY: DATA FRAM STAT - CURRENT ENG: THC_A DF STATUS PUI: JSDC00SWEA20J	
107-118	KECL	MS1	PCS:JPM:ECLSS:THC A:THC A COMMANDS:PDB TCS1 RPC DETAILS PDB TCS1 RPC DETAILS 'PDB TCS1' VERIFY: HEALTH SUMMARY – NORMAL ENG: PDB_TCS1 HEALTH STATUS SUMMARY PUI: JSDC00FCP900J	
107-119	KECL	MS1	PCS JPM:ECLSS:THC A:THC A COMMANDS JPM THC A COMMANDS 'STATUS' VERIFY: HEALTH STAT SUMM - NORMAL ENG: THC_A HEALTH STATUS SUMMARY STACK PUI: JSDC00FCEA0GJ	
107-120	KECL		TCMS:THC A VERIFY: 1. BIT STATUS (STACK) - VALID ENG: THC_A BIT STATUS STACK PUI: JSDC00FCEA0IJ 2. CNTLR BIT RESULT (STACK) - NORMAL ENG: THC_A CNTLR BIT RESULT STACK PUI: JSDC00FCEA0HJ	

RELEASED - Printed documents may be obsolete; validate prior to use.

SECTION IV - OPERATION INSTRUCTIONS

SEQ/STEP	CMD	RESP	DESCRIPTION	VERIF.
			SELECT THC A FAN SPEED	
107-121	KECL	MS1	PCS JPM:ECLSS:THC A:THC A COMMANDS JPM THC A COMMANDS 'FAN' RECORD: SPEED – _____RPM (BD) ENG: THC_A CABIN FAN SPEED CURRENT PUI: JSDC00FCEA02R **NOTE** THC A FAN ACTIVATION TAKES APPROXIMATELY 35 SECONDS.	
107-122	KECL	MS1	PCS JPM:ECLSS:THC_A:THC A COMMANDS JPM THC A COMMANDS 'THC A' 1. CMD: OPS MODE - NORMAL OPS: JPM_ECL_THC_A_OPS_MODE_NORMAL PUI: JSET96IM0023K GMT _____:_____:_____ (HR:MIN:SEC) (RECORD IN APPENDIX G) VERIFY/RECORD: 2. OPS MODE - NORMAL ENG: THC_A RUN STATUS PUI: JSDC00FCEA0XJ 3. FAN SPEED – _____RPM (4958-6102 RPM) ENG: THC_A CABIN FAN SPEED CURRENT PUI: JSDC00FCEA02R ~OMRSD A3000MI.100-C (ECLSS THC A)	

RELEASED - Printed documents may be obsolete; validate prior to use.

SECTION IV - OPERATION INSTRUCTIONS

SEQ/STEP	CMD	RESP	DESCRIPTION	VERIF.
107-123	KECL	MS1	PCS JPM:ECLSS:THC A:THC A COMMANDS THC A COMMANDS 'STATUS' VERIFY: 1. HEALTH STAT SUMM - NORMAL ENG: THC_A SENSORS HEALTH STATUS STACK PUI: JSDC00FCEA0GJ 2. THCU HEALTH STAT - NORMAL ENG: THC_A CNTLR HEALTH STATUS STACK PUI: JSDC00FCEA05J 3. FAN HEALTH STAT - NORMAL ENG: THC_A CABIN FAN HEALTH STATUS STACK PUI: JSDC00FCEA06J 4. WS HEALTH STAT - NORMAL ENG: THC_A WATER SEPARATOR HEALTH STATUS STACK PUI: JSDC00FCEA08J 5. TCV HEALTH STAT - NORMAL ENG: THC_A TEMP CNTRL VALVE HEALTH STATUS STACK PUI: JSDC00FCEA0AJ 6. CHX HEALTH STAT - NORMAL ENG: THC_A CHX HEALTH STATUS STACK PUI: JSDC00FCEA09J 7. HEPA FILTER HEALTH STAT - NORMAL ENG: THC_A PARTICLE FILTER HEALTH STATUS STACK PUI: JSDC00FCEA07J	
107-124	KECL	MS1	TCMS: THC-A VERIFY: SENSOR HEALTH STATUS (STACK) – NORMAL ENG: THC_A SENSORS HEALTH STATUS STACK PUI: JSDC00FCEA0BJ	

RELEASED - Printed documents may be obsolete; validate prior to use.

SECTION IV - OPERATION INSTRUCTIONS

SEQ/STEP	CMD	RESP	DESCRIPTION	VERIF.
107-125	KECL	MS1	PCS JPM:ECLSS JPM ECLSS 'CABIN TEMP' 1. ENTER - 23.5 DEGREES C CMD: SET OPS: JPM_ECL_THC_CABIN_TEMP_SET_TMPLT PUI: JSET96IM0064K GMT _____:_____:_____ (HR:MIN:SEC) 2. VERIFY: THC A CABIN TEMP SETPOINT – 23.5 DEG C ENG:PM_CABIN_TEMP_SETUP_VALUE_A PUI: JSDC00FCEA1KT 3. VERIFY: THC B CABIN TEMP SETPOINT – 23.5 DEG C ENG: PM_CABIN_TEMP_SETUP_VALUE_B PUI: JSDC00FCEC1KT **ENABLE FAS/LIMIT CHECK FOR THC FAN SPEED**	
107-126	KECL	SSFE	CES MATE: LOAD AND RUN MATE SCRIPT MEIT3_MATE_CMDS INDEX: 0X0061 ENG: JPM_CDH_ACTIVE_JCP_EVENT_DET_ENA_TMPLT PUI: JSDD96IM0227K PARAMETER: 514 (THC_A CABIN FAN ROTATIONAL RATE LOW) GMT _____:_____:_____ (HR:MIN:SEC)	

RELEASED - Printed documents may be obsolete; validate prior to use.

SECTION IV - OPERATION INSTRUCTIONS

SEQ/STEP	CMD	RESP	DESCRIPTION	VERIF.
107-127	KECL		TCMS THC-A VERIFY: ROTATIONAL RATE LOW EVENT FLAG - ENABLE ENG: EVENT INHIBIT FLAG(THC_A CABIN FAN ROTATIONAL RATE LOW) PUI: JSDC00SWZ3BNJ	
			RECONFIGURE THC_B RUN STATUS	
107-128	KECL	SSFE	PCS JPM:ECLSS:THC B:THC B COMMANDS JPM THC B COMMANDS 'THC B' CMD: OPS MODE - NORMAL OPS: JPM_ECL_THC_B_OPS_MODE_NORMAL PUI: JSET96IM0044K GMT _____:_____:_____ (HR:MIN:SEC) **NOTE** IT TAKES APPROXIMATELY 35 SECONDS FOR THE THC B TO TRANSFER FROM HIGH TO NORMAL MODE. VERIFY/RECORD: 1. OPS MODE – NORMAL ENG: THC_B RUN STATUS PUI: JSDC00FCEC0XJ 2. FAN SPEED – _____RPM (4958-6102 RPM) ENG: THC_B CABIN FAN SPEED CURRENT PUI: JSDC00FCEC02R	

RELEASED - Printed documents may be obsolete; validate prior to use.

SECTION IV - OPERATION INSTRUCTIONS

SEQ/STEP	CMD	RESP	DESCRIPTION	VERIF.
			ACTIVATE A STRING CABIN SMOKE DETECTOR	
107-129	KECL	MS1	PCS JPM:ECLSS:SD A:PIB A1 SWITCH DETAILS PIB A1 SWITCH DETAILS '120V/0.5A' 1. CMD: SWITCH 30 (JPM CABIN SD A) - CLOSE OPS: JPM_EPS_PIB_A1_120V_L_SW30_(JPM_CABIN_SD_A)_CL PUI: JSPX96IM0644K GMT _____:_____:_____ (HR:MIN:SEC) 2. VERIFY: SWITCH 30 (JPM CABIN SD A) POSN - CL ENG: PIB_A1 120V_L SW30 POWER STATUS PUI: JSDC00FCPC2TJ	

RELEASED - Printed documents may be obsolete; validate prior to use.

SECTION IV - OPERATION INSTRUCTIONS

SEQ/STEP	CMD	RESP	DESCRIPTION	VERIF.
			SET CABIN SD A BIT THRESHOLD	
107-130	KECL	MS1	PCS JPM:ECLSS:SD A JPM CABIN SMOKE DETECTOR A 'BIT THRESHOLD' 1. CMD: BIT THRESHOLD PARAMETER 1: BIT OBS HI RAIL: –3.60 PARAMETER 2: BIT LED SCTR LOW RAIL: 1.86 PARAMETER 3: BIT LED SCTR HI RAIL: 3.86 PARAMETER 4: BIT QUIET SCTR HI RAIL: 0.50 SET OPS: JPM_ECL_FDS_CABIN_SD_A_BIT_THOLD_SET_TMPLT PUI: JSEF96IM0030K GMT _____:_____:_____ (HR:MIN:SEC) VERIFY: 2. BIT OBS HI RAIL - -3.60 +/- 0.08 VOLTS ENG: PM_CABIN_SD_A BIT OBSCURATION HIGH RAIL PUI: JSDC00FCE71BV 3. BIT LED SCTR LOW RAIL - 1.86 +/- 0.08 VOLTS ENG: PM_CABIN_SD_A BIT LED SCATTER LOW RAIL PUI: JSDC00FCE71CV 4. BIT LED SCTR HI RAIL - 3.86 +/- 0.08 VOLTS ENG: PM_CABIN_SD_A BIT LED SCATTER HIGH RAIL PUI: JSDC00FCE71DV	

RELEASED - Printed documents may be obsolete; validate prior to use.

SECTION IV - OPERATION INSTRUCTIONS

SEQ/STEP	CMD	RESP	DESCRIPTION	VERIF.

NOTE

THE FOLLOWING COMMAND CHANGES SIX THRESHOLD DEFAULT VALUES FOR THE SMOKE DETECTOR. ONLY THE “OBSCURATION THRESHOLD” AND THE “SCATTER THRESHOLD” CAN BE CONFIRMED. SINCE THESE TWO DEFAULT VALUES ARE NOT CHANGED, TO CONFIRM THE COMMAND IS RECEIVED SUCCESSFULLY, THE “OSCURATION THRESHOLD” WILL BE TEMPORARILY UPDATED TO 0.00 VOLTS, AND THEN RESET TO THE DEFAULT VALUE OF 0.50 VOLTS.

107-131 KECL MS1 PCS
JPM:ECLSS:SD A
JPM CABIN SMOKE DETECTOR A

‘THRESHOLD’

1. CMD: THRESHOLD
   PARAMETER 1: OBS THRESHOLD: 0.00
   PARAMETER 2: OBS HI RAIL: 0.00
   PARAMETER 3: OBS LOW RAIL: 0.00
   PARAMETER 4: SCTR THRESHOLD: 0.00
   PARAMETER 5: SCTR LOW RAIL: 0.00
   PARAMETER 6: LENS CONTAM LOW LIMIT: 0.00
   SET
   OPS:
   JPM_ECL_FDS_CABIN_SD_A_THOLD_SET_TMPLT
   PUI: JSEF96IM0027K

   GMT _____:_____:_____ (HR:MIN:SEC)

2. VERIFY: OBS THRESHOLD – 0.00 +/- 0.08 VOLTS
   ENG: PM_CABIN_SD_A OBSCURATION T/H
   PUI: JSDC00FCE719V

RELEASED - Printed documents may be obsolete; validate prior to use.

SECTION IV - OPERATION INSTRUCTIONS

SEQ/STEP	CMD	RESP	DESCRIPTION	VERIF.
107-132	KECL	MS1	PCS JPM:ECLSS:SD A JPM CABIN SMOKE DETECTOR A 'THRESHOLD' 1. CMD: THRESHOLD PARAMETER 1: OBS THRESHOLD: 0.50 PARAMETER 2: OBS HI RAIL: 4.60 PARAMETER 3: OBS LOW RAIL: -4.50 PARAMETER 4: SCTR THRESHOLD: 2.00 PARAMETER 5: SCTR LOW RAIL: -0.50 PARAMETER 6: LENS CONTAM LOW LIMIT: 0.00 SET OPS: JPM_ECL_FDS_CABIN_SD_A_THOLD_SET_TMPLT PUI: JSEF96IM0027K GMT _____:_____:_____ (HR:MIN:SEC) VERIFY: 2. OBS THRESHOLD – 0.50 +/- 0.08 VDIF ENG: PM_CABIN_SD_A OBSCURATION T/H PUI: JSDC00FCE719V 3. SCTR THRESHOLD – 2.00 +/- 0.08 VDIF ENG: PM_CABIN_SD_A SCATTER T/H PUI: JSDC00FCE71AV **CHECK CABIN SD A STATUS**	
107-133	KECL	MS1	PCS JPM:ECLSS:SD A JPM CABIN SMOKE DETECTOR A 'ACTIVE BIT' 1. CMD: STATUS RESET OPS: JPM_ECL_FDS_CABIN_SD_A_BIT_STAT_RST PUI: JSEF96IM0028K GMT _____:_____:_____ (HR:MIN:SEC) 2. VERIFY: STATE - INVALID ENG: PM_CABIN_SD_A BIT STATUS PUI: JSDC00FCE715J	

RELEASED - Printed documents may be obsolete; validate prior to use.

SECTION IV - OPERATION INSTRUCTIONS

SEQ/STEP	CMD	RESP	DESCRIPTION	VERIF.
107-134	KECL	MS1	PCS JPM:ECLSS:SD A JPM CABIN SMOKE DETECTOR A 'ACTIVE BIT' 1. CMD: INITIATE OPS: JPM_ECL_FDS_CABIN_SD_A_BIT_START PUI: JSEF96IM0029K GMT _____:_____:_____ (HR:MIN:SEC) VERIFY: 2. STATE - VALID ENG: PM_CABIN_SD_A BIT STATUS PUI: JSDC00FCE715J 3. FAILURE – 'BLANK' ENG: JPM_ECL_FDS_CABIN_SD_A_BIT_RSLT PUI: JSDC00FCE714J	
107-135	KECL	MS1	PCS JPM:ECLSS:SD A JPM CABIN SMOKE DETECTOR A 'MONITORING' 1. CMD: ENABLE OPS: JPM_ECL_FDS_CABIN_SD_A_MONITOR_START PUI: JSEF96IM0024K GMT _____:_____:_____ (HR:MIN:SEC) 2. VERIFY: STATUS - VALID ENG: PM_CABIN_SD_A MONITOR STATUS PUI: JSDC00FCE712J ~OMRSD A3000MI.100-C (ECLSS SMOKE DETECTOR A)	

RELEASED - Printed documents may be obsolete; validate prior to use.

SECTION IV - OPERATION INSTRUCTIONS

SEQ/STEP	CMD	RESP	DESCRIPTION	VERIF.
			RECONFIGURE TCS LTL VALVE	
			POWER ON CHX FLOW RATE SENSOR A	
107-136	KTCS	MS1	PCS JPM:EPS:PIB A1 PIB A1 SWITCH DETAILS '120V/0.5A' 1. CMD: SW39 (LTL THC A CHX FRS) - CLOSE ENG: PIB_A1_120V_L_SW39_CL_(LTL_THC_A_CHX_FRSNSR) PUI: JSTE96IM0133K GMT _____:_____:_____ (HR:MIN:SEC) 2. VERIFY: SW39 POSN – CL PUI: JSDC00FCPC32J	
			SET POSITION LTL CHX-A VALVE	
107-137	KTCS	MS1	PCS JPM:EPS:PIB A1 PIB A1 SWITCH DETAILS '120V/0.5A' CMD: SW10 (LTL THC A CHX FCV A) - CLOSE ENG: JPM_EPS_PIB_A1_120V_L_SW10_(LTL_THCACHX FCVA)_CL PUI: JSTE96IM0121K GMT _____:_____:_____ (HR:MIN:SEC)	
107-138	KTCS	MS1	PCS JPM:TCS:JPM ATCS LTL 'JPM ATCS LTL' 'LTL' 'THC A CHX FCV' VERIFY: PIB_A1 120V_L SW10 POSN - CL PUI: JSDC00FCPC29J	

RELEASED - Printed documents may be obsolete; validate prior to use.

SECTION IV - OPERATION INSTRUCTIONS

SEQ/STEP	CMD	RESP	DESCRIPTION	VERIF.
107-139	KTCS	MS1	PCS JEM:TCS:JPM ATCS LTL 'JPM ATCS LTL' 'LTL' 'THC A CHX FCV' 1. ENTER: VALVE POSN – 36 DEG 2. CMD: – VALVE POSN - SET ENG: JPM_ATCS_LTL_TCH_A_CHX_FCV_A_POSN_SET_TMPL T PUI: JSTE96IM0276K GMT _____:_____:_____ (HR:MIN:SEC) 3. VERIFY: PIB_A1 120V_L SW10 POSN - OFF PUI: JSDC00FCPC29J OPS: PIB_A1 120V_L SW10 POWER STATUS **SET POSITION LTL CHX-B VALVE**	
107-140	KTCS	SSFE	CES MATE LOAD AND RUN MATE SCRIPT MEIT3_MATE_CMDS INDEX: 0X00C1 CMD: PIB B2 120V L SW11 - CL ENG: JPM_EPS_PIB_B2_120V_L_SW11_(LTL_THCBCHXPCVB)_CL PUI: JSTE96IM0224K GMT _____:_____:_____ (HR:MIN:SEC)	
107-141	KTCS	MS1	PCS JPM:TCS:JPM ATCS LTL 'JPM ATCS LTL' 'LTL' 'THC B CHX FCV' VERIFY: PIB_B2 120V_L SW11 POSN - ON PUI: JSDC00FCPK2AJ	

RELEASED - Printed documents may be obsolete; validate prior to use.

SECTION IV - OPERATION INSTRUCTIONS

SEQ/STEP	CMD	RESP	DESCRIPTION	VERIF.
107-142	KTCS	MS1	PCS JEM:TCS:JPM ATCS LTL 'JPM ATCS LTL' 'LTL' 'THC B CHX FCV' 1. ENTER: VALVE POSN – 38 DEG 2. CMD: VALVE POSN - SET ENG: THC_B_CHX_FLOW_MODLT_VALVE PUI: JSTE96IM0284K GMT _____:_____:_____ (HR:MIN:SEC) 3. VERIFY: PIB_B2 120V_L SW11 POSN - OP PUI: JSDC00FCPK2AJ **SET TCA-L PUMP SPEED**	
107-143	KTCS	MS1	PCS JPM:TCS:JPM ATCS LTL 'JPM ATCS LTL' 'TCA L' 'PUMP' 1. ENTER: SPEED SET – 5800 RPM 2. CMD: SPEED SET - SET PUI: JSTE96IM0305K OPS: JPM_ATCS_TCA_L_PUMP_A_SPD_SET_TMPLT GMT _____:_____:_____ (HR:MIN:SEC)	

RELEASED - Printed documents may be obsolete; validate prior to use.

SECTION IV - OPERATION INSTRUCTIONS

SEQ/STEP CMD RESP DESCRIPTION VERIF.

VERIFY TCA-L HEALTH AND STATUS

NOTE

IN THE FOLLOWING STEP, PUMP DIFF PRESS AND TOTAL FLOW SHALL BE VERIFIED BY KTCS AND NASDA ACCORDING TO APPENDIX M FIGURE M-2 (TCA-L) IN APPENDIX M.

107-144 KTCS MS1 PCS
JPM:JPM TCS
'JPM ATCS OVERVIEW'

RECORD/VERIFY THE FOLLOWING PARAMETERS:

NOMENCLATURE	ACTUAL VALUE	EXPECTED VALUE	PUI
'TCA L' PUMP SPEED		5800 +/- 329 RPM	JSDC00FCTA1WR
'TCA L'ACCUM WATER VOL 1		0.66-4.7 L	JSDC00FCTA02Q
'TCA L'ACCUM WATER VOL 2		0.66-4.7 L	JSDC00FCTA03Q
'TCA L'ACCUM WATER PRESS 1		134.0-282.1 KPA	JSDC00FCTA00P
'TCA L'ACCUM WATER PRESS 2		106.9-282.1 KPA	JSDC00FCTA01P
'TCA L' PUMP DP		IN OPERATIONAL RANGE (REF APPENDIX M FIGURE M-2)	JSDC00FCTA1VP
'TCA L' PUMP OUT FLOW RATE		IN OPERATIONAL RANGE (REF APPENDIX M FIGURE M-2)	JSDC00FCTA0ZR
'LTL' LOOP DP A		> 51.6 KPAD	JSDC00FCT020P
'LTL' LOOP DP B		> 51.6 KPAD	JSDC00FCT030P
THC A CHX FLOW_RATE		>175 KG/H	JSDC00FCT1E0R
THC B CHX FLOW_RATE		>175 KG/H	JSDC00FCT1J0R
'LTL'_BYPASS_FLOW_RATE_A		BD	JSDC00FCT1F0R

RELEASED - Printed documents may be obsolete; validate prior to use.

SECTION IV - OPERATION INSTRUCTIONS

SEQ/STEP	CMD	RESP	DESCRIPTION	VERIF.
			RECONFIGURE THC MODE	
107-145	KECL	MS1	PCS JPM:ECLS JPM ECLSS 'THC MODE' 1. CMD: THC MODE - NORMAL OPS: JPM_ECL_THC_MODE_SEL_TMPLT PUI: JSDD96IM0234K GMT _____:_____:_____ (HR:MIN:SEC) 2. VERIFY: THC MODE - NORMAL ENG: THC MODE STATUS PUI: JSDC00SWZ602J	

RELEASED - Printed documents may be obsolete; validate prior to use.

SECTION IV - OPERATION INSTRUCTIONS

SEQ/STEP	CMD	RESP	DESCRIPTION	VERIF.
			ACTIVATE PDB_WS	
107-146	KEPS	MS1	PCS JPM:EPS:PDU A1 'PDU A1 RPC DETAILS' 'JRPCM2' 1. CMD: PDU A1 RPC9 (PDB A WS) - CLOSE PUI: JSPX96IM0745K OPS: JPM_EPS_PDU_A1_RPC09_(PDB_A_WS)_CL EXECUTE GMT _____:_____:_____ (HR:MIN:SEC) VERIFY: 2. PDU A1 RPC9 (PDB A WS) POSN - ON PUI: JSDC00FCPH0OJ ENG: SYS_PDU_A RPC9 POWER STATUS JPM:EPS:PDB WS 'PDB WS RPC DETAILS' 'PDB WS' 3. DATA FRAME STATUS - CURRENT PUI: JSDC00SWPB20J ENG: PDB_WS DF STATUS 4. HEALTH STATUS SUMMARY – BLANK (NORMAL) PUI: JSDC00FCPB00J ENG: PDB_WS HEALTH STATUS SUMMARY	
107-147	KEPS		TCMS PDB WS:JPM EPS PDB WS RECORD: PDB WS INPUT VOLTAGE _____ (BD) ENG: PDB_WS INPUT VOLTAGE PUI: JSDC00FCPB1LV	
107-148	KEPS		TCMS TCMS (JPM_DIU_A3) 'DIU BIT' VERIFY: HEALTH SUM – NORMAL ENG: DIU_A3 HEALTH STATUS SUMMARY PUI: JSDC—FCP400J	

RELEASED - Printed documents may be obsolete; validate prior to use.

SECTION IV - OPERATION INSTRUCTIONS

SEQ/STEP	CMD	RESP	DESCRIPTION	VERIF.
			PERFORM EPS MEASUREMENTS	
			NOTE QUIET TIME IS REQUIRED DURING CONDUCTED EMISSIONS/VOLTAGE RIPPLE AND POWER QUALITY MEASUREMENTS.	
107-149	PTC	KEPS DKQM	PERFORM POWER QUALITY AND EME MEASUREMENTS FOR NODE2/JEM LOAD CONFIGURATION III PER EPS A-STRING POWER QUALITY AND EME R0031V2 SEQUENCE 110 TASK III REPORT COMPLETION. START GMT _____:_____:_____ (DAY:HR:MIN) COMPLETE GMT _____:_____:_____ (DAY:HR:MIN)	NV:_____
107-150	KEPS	PTC	OK TO PROCEED WITH SEQUENCE	
			CONFIGURE JEM IMV-A VALVE AND FAN	
107-151	KECL	MS1	PCS JPM:ECLSS:IMV STBD FWD VLV:PIB A1 SWITCH DETAILS PIB A1 SWITCH DETAILS ‘120V/0.5A’ 1. CMD: SWITCH 8 (JPM IMV STBD FWD VLV A) - CLOSE OPS: JPM_EPS_PIB_A1_120V_L_SW08_(JPM-IMV-STBD-FWD-VLVA)_CL PUI: JSPX96IM0640K GMT _____:_____:_____ (HR:MIN:SEC) 2. VERIFY: SWITCH 8 (JPM IMV STBD FWD VLV A) POSN - CL ENG: PIB_A1 120V_L SW8 POWER STATUS PUI: JSDC00FCPC27J	

RELEASED - Printed documents may be obsolete; validate prior to use.

SECTION IV - OPERATION INSTRUCTIONS

SEQ/STEP	CMD	RESP	DESCRIPTION	VERIF.
107-152	KECL	MS1	PCS JPM:ECLSS:IMV STBD FWD VLV JPM IMV VALVES 'IMV STBD FWD VALVE' 1. CMD: POSITION - OPEN OPS: JPM_ECL_IMV_STBD_FWD_VLV_A_POSN_OP PUI: JSET96IM0007K GMT _____:_____:_____ (HR:MIN:SEC) 2. CMD: VALVE ENABLE - ENABLE OPS: JPM_ECL_IMV_STBD_FWD_VLV_A_ENA PUI: JSET96IM0009K GMT _____:_____:_____ (HR:MIN:SEC) **NOTE** VALVE TRANSITION MAY TAKE APPROXIMATELY 35 SECONDS. VERIFY: 3. VALVE POSITION (STACK) – OPEN ENG: JEM_IMV_SUPPLY_VALVE STACK POSTN PUI: JSDC00SWE341J 4. SWITCH 8 POSN – OP ENG: PIB_A1 120V_L SW8 POWER STATUS PUI: JSDC00FCPC27J ~OMRSD A3000MI.100-C (ECLSS IMV VALVE A)	

RELEASED - Printed documents may be obsolete; validate prior to use.

SECTION IV - OPERATION INSTRUCTIONS

SEQ/STEP	CMD	RESP	DESCRIPTION	VERIF.
			NOTE PERFORM THIS STEP IF THE CAP OF THE IMV STBD FWD VALVE IS INSTALLED.	
107-153	KECL	KFWT DKQN	REMOVE FLIGHT CAP FROM STBD FWD IMV VALVE. BAG AND TAG CAP TO PRESERVE CLEANLINESS.	
				TNW:_____
				NOT PERFORMED:_____
			NOTE WHEN THIS STEP EXECUTES, PDB_EPS1 RPC4 TRIP STATUS INDICATES ‘ABNORMAL’ ONLY FOR A MOMENT AND PDB_EPS1 HEALTH STATUS SUMMARY INDICATES ‘ERROR’.	
107-154	KECL	MS1	PCS JPM:ECLSS:IMV STBD FWD FAN:PDB EPS1 RPC DETAILS PDB EPS1 RPC DETAILS ‘PDB EPS1’ 1. CMD: RPC 4 (JPM IMV STBD FWD FAN A) - CLOSE OPS: JPM_EPS_PDB_A_EPS1_RPC04_(JPM_IMV_STBD_FWD _FAN_A)_CL PUI: JSPX96IM0538K GMT _____:_____:_____ (HR:MIN:SEC) 2. VERIFY: RPC 4 (JPM IMV STBD FWD FAN A) POSN – CL ENG: PDB_EPS1 RPC4 POWER STATUS PUI: JSDC00FCP70FJ	

RELEASED - Printed documents may be obsolete; validate prior to use.

SECTION IV - OPERATION INSTRUCTIONS

SEQ/STEP	CMD	RESP	DESCRIPTION	VERIF.
107-155	KECL	MS1	PCS JPM:ECLSS:IMV STBD FWD_ FAN JPM IMV FANS 'IMV STBD FWD FAN' RECORD: SPEED - _____ (BD) ENG: JEM_IMV_SUPPLY_FAN REV PUI: JSDC00FCE120R	
107-156	KECL	MS1	PCS JPM:ECLSS:IMV STBD FWD FAN JPM IMV FANS 'IMV STBD FWD FAN' 1. CMD: ON OPS: JPM_ECL_IMV_STBD_FWD_FAN_A_START PUI: JSET96IM0004K GMT _____:_____:_____ (HR:MIN:SEC) (RECORD IN APPENDIX G) 2. VERIFY/RECORD: SPEED – _____RPM (7745 – 9750 RPM) ENG: JEM_IMV_SUPPLY_FAN REV PUI: JSDC00FCE120R ~OMRSD A3000MI.100-C (ECLSS IMV FAN SPEED A)	

RELEASED - Printed documents may be obsolete; validate prior to use.

SECTION IV - OPERATION INSTRUCTIONS

SEQ/STEP	CMD	RESP	DESCRIPTION	VERIF.
107-157	KECL	SSFE	CES MATE LOAD AND RUN MATE SCRIPT MEIT3_MATE_CMDS INDEX: 0X005E CMD: JPM_CDH_ACTIVE_JCP_EVENT_DET_ENA_TMPLT OPS: JPM_CDH_ACTIVE_JCP_EVENT_DET_ENA_TMPLT PUI: JSDD96IM0227K PARAMETER: 454 (JEM IMV SUPPLY FAN ROTATIONAL RATE OUT OF LIMIT) GMT _____:_____:_____ (HR:MIN:SEC)	
107-158	KECL		TCMS:A-STRING VERIFY: IMV SUPPLY FAN (STBD FWD) ROTATIONAL RATE OUT OF LIMIT EVENT FLAG – ENG: EVENT INHIBIT FLAG(JEM IMV SUPPLY FAN ROTATIONAL RATE OUT OF LIMIT) PUI: JSDC00SWZ38AJ	
107-159	KEPS		PCS JPM:EPS:PDB EPS1 ‘PDB EPS1 RPC DETAILS’ ‘PDB EPS1’ RECORD HEALTH STATUS SUMMARY: _____ ENG: PDB_EPS1 HEALTH STATUS SUMMARY PUI: JSDC00FCP700J	
107-160	KEPS	SSFE	CES MATE LOAD AND RUN MATE SCRIPT MEIT3_MATE_CMDS INDEX: 0X008F CMD: JPM_EPS_PDB_A_EPS1_BIT_STAT_RST PUI: JSPX96IM0560K EXECUTE GMT _____:_____:_____ (HR:MIN:SEC)	
107-161	KEPS		TCMS PDB EPS1:JPM EPS PDB EPS1 VERIFY: HEALTH STATUS SUMMARY – NORMAL PUI: JSDC00FCP700J	

RELEASED - Printed documents may be obsolete; validate prior to use.

SECTION IV - OPERATION INSTRUCTIONS

SEQ/STEP	CMD	RESP	DESCRIPTION	VERIF.
			PERFORM EPS MEASUREMENTS	
			NOTE QUIET TIME IS REQUIRED DURING CONDUCTED EMISSIONS/VOLTAGE RIPPLE AND POWER QUALITY MEASUREMENTS.	
107-162	PTC	KEPS DKQM	PERFORM POWER QUALITY MEASUREMENTS FOR NODE2/JEM LOAD CONFIGURATION IV PER EPS A-STRING POWER QUALITY AND EME R0031V2 SEQUENCE 110 TASK IV. REPORT COMPLETION. START GMT _____:_____:_____ (DAY:HR:MIN) COMPLETE GMT _____:_____:_____ (DAY:HR:MIN)	NV:_____
107-163	KEPS	PTC	OK TO CONTINUE WITH SEQUENCE	
			PERFORM EPS MEASUREMENTS	
107-164	PTC	KEPS DKQM	PERFORM POWER QUALITY MEASUREMENTS FOR NODE2/JEM LOAD CONFIGURATION V PER EPS A-STRING POWER QUALITY AND EME R0031V2 SEQUENCE 110 TASK V. REPORT COMPLETION. START GMT _____:_____:_____ (DAY:HR:MIN) COMPLETE GMT _____:_____:_____ (DAY:HR:MIN)	NV:_____
107-165	KEPS	PTC	OK TO CONTINUE WITH SEQUENCE	
107-166	PTC	KEPS	PERFORM LOAD DEACTIVATION STEPS FOR THE FOLLOWING: GLA'S, ATU(A), TV MON1, TV MON2, CCP(A) AND VIDEO SYSTEM(CVIU_A, VCU_A, AND CPB_A) PER SEQUENCE 110 COMPLETE GMT _____:_____:_____ (DAY:HR:MIN)	
107-167	TIE PTC 052	PTC DKQM	JEM A STRING ACTIVATION (JCP-A STANDBY) COMPLETE. GMT _____:_____:_____ (DAY:HR:MIN)	NV:_____

RELEASED - Printed documents may be obsolete; validate prior to use.

SECTION IV - OPERATION INSTRUCTIONS

SEQ/STEP	CMD	RESP	DESCRIPTION	VERIF.
108-000			**NODE 2 A STRING PARTIAL DEACTIVATION**	
108-001	PTC	DKQM	RECORD THE FOLLOWING INFORMATION:	
			SEQ/STEP THAT CALLED THIS SETUP _____	
			GMT _____:_____:_____ (DAY:HR:MIN)	
				NV:_____
			INHIBIT INT AND PMCU AUTO TRANSITION TO DIAG	
			NOTE	
			PERFORM THE NEXT STEP IF THE PRIMARY INT AUTO TRANSITION TO DIAG IS ENABLED.	
108-002	KCDH	MS1	INHIBIT INT AUTO TRANSITION TO DIAG	
			PCS:HOME/C&DH ICON/PRIMARY INT MDM/MDM FDIR	
			'AUTO TRANSITION TO DIAGNOSTIC'	
			1. CMD INHIBIT EXECUTE	LADD96IM0377K
			2. AUTO TRANSITION TO DIAGNOSTIC – INH	LADP08MD5002J
				NOT PERFORMED:_____
			NOTE	
			PERFORM THE NEXT STEP IF THE PRIMARY PMCU AUTO TRANSITION TO DIAG IS ENABLED.	
108-003	KCDH	MS1	INHIBIT PMCU AUTO TRANSITION TO DIAG.	
			PCS:HOME/C&DH ICON/PRIMARY PMCU MDM/MDM FDIR	
			1. CMD AUTO TRANSITION TO DIAGNOSTICS INHIBIT EXECUTE	LADD96IM0235K
			2. VERIFY: AUTO TRANSITION TO DIAGNOSTICS – INH	LADP13MD2764J
				NOT PERFORMED:_____

RELEASED - Printed documents may be obsolete; validate prior to use.

SECTION IV - OPERATION INSTRUCTIONS

SEQ/STEP	CMD	RESP	DESCRIPTION	VERIF.
			DEACTIVATE ASD1	
108-004	KECL	MS1	PCS NODE2:ECLSS:SD1 NODE 2 SMOKE DETECTOR 1 'MONITORING' 1. CMD: MONITORING - INHIBIT OPS: NODE_2_SD_1_MON_INH PUI: N2DS23SM1002K EXECUTE GMT _____:_____:_____ (HR:MIN:SEC) 2. VERIFY: STATUS – INHIBITED ENG: FDS N2S1 MDM SD ASD1 MONITORING FLAG PUI: N2DS23MD0006J	
108-005	KECL	MS1	PCS NODE2:ECLSS:SD1:RPCM_N21A4A_C_RPC06 RPCM_N21A4A 'RPCM_N21A4A_C_RPC06' 1. CMD: RPC POSITION - OPEN OPS: RPCM_N21A4A_C_RPC_06_AIR_SMOKE_DETECTOR_1_ OP PUI: LAPR96IM2271K GMT _____:_____:_____ (HR:MIN:SEC) 2. VERIFY: RPC POSITION - OP ENG: RPCM N2NAD 1A4A_C SW06 VOLTAGE STATUS PUI: N2PN19FC1021J	
			DEACTIVATE NODE 2 MTL	
108-006	PTC	KEPS KCDH	VERIFY THAT THE FOLLOWING NODE2 RPCM, DDCU, AND MDM TEMPERATURES ARE BEING MONITORED ON TCMS PRIOR TO MTL DEACTIVATION: 1. DDCU N2 STB-4A 2. DDCU N2 STB-1B 3. RPCM N2 STB-1B4A-A THRU -C 4. DDCU N2 NAD-4B 5. DDCU N2 NAD-1B 6. RPCM N2 NAD-1B4B-A THRU –B 7. MDM N2-1	

RELEASED - Printed documents may be obsolete; validate prior to use.

SECTION IV - OPERATION INSTRUCTIONS

SEQ/STEP	CMD	RESP	DESCRIPTION	VERIF.

INHIBIT NODE 2 AUTO THERMAL LOAD SHED

108-007 KCDH MS1 PCS
CDH:C&C 1 PRIMARY:APPLICATIONS

RECORD:

1. LOAD SHED - _____ (BD)
   PUI: LADP01MDD4QMJ

2. VEHICLE SAFING - _____ (BD)
   PUI: LADP01MDD4QPJ

NOTE

IF LOAD SHED IS ENABLED, PERFORM THE FOLLOWING STEP.

108-008 KCDH MS1 PCS
CDH:C&C 1 PRIMARY:APPLICATIONS

1. COMMAND: LOAD SHED - INH
   PUI: LADD96IM0682K

2. VERIFY: LOAD SHED - INH
   PUI: LADP01MDD4QMJ

NOT PERFORMED:_____

NOTE

IF VEHICLE SAFING IS ENABLED, PERFORM THE FOLLOWING STEP.

108-009 KCDH MS1 PCS
CDH:C&C 1 PRIMARY: APPLICATIONS

1. COMMAND: VEHICLE SAFING - INH
   PUI: LADD96IM0682K

2. VERIFY: VEHICLE SAFING - INH
   PUI: LADP01MDD4QPJ

NOT PERFORMED:_____

RELEASED - Printed documents may be obsolete; validate prior to use.

SECTION IV - OPERATION INSTRUCTIONS

SEQ/STEP	CMD	RESP	DESCRIPTION	VERIF.
			REMOVE POWER FROM MTL NIA VENT VALVE	
108-010	KTCN	MS1	PCS NODE 2: TCS: MTL PPA: NODE2 MTL NIA COMMANDS: RPCM_N21B4B_B_RPC_02 RPCM_N21B4B_B_RPC_02_ “LOAD: N2 NIA MTL VENT VALVE PWR” 1. CMD: RPC POSITION – OPEN PUI: LAPR96IM2324K 2. VERIFY: RPC POSITION – OP PUI: N2PN22FC1017J	
			REMOVE POWER FROM MTL NIA ISOLATION VALVE	
108-011	KTCN	MS1	PCS NODE 2: TCS: MTL PPA: NODE2 MTL NIA COMMANDS: RPCM_N21B4B_B_RPC_15 RPCM_N21B4B_B_RPC_15_ “LOAD: N2 NIA MTL ISOLATION VALVE PWR” 1. CMD: RPC POSITION – OPEN PUI: LAPR96IM2337K 2. VERIFY: RPC POSITION – OP (0) PUI: N2PN22FC1030J	

RELEASED - Printed documents may be obsolete; validate prior to use.

SECTION IV - OPERATION INSTRUCTIONS

SEQ/STEP	CMD	RESP	DESCRIPTION	VERIF.

CAUTION

AFTER THE FOLLOWING STEP, NODE2 RPCM'S WILL BE ACTIVE WITHOUT COOLANT FLOWING THROUGH THE IATCS MT LOOP. BASE PLATE TEMPERATURES MUST BE CONTINUOUSLY MONITORED FOR OVERHEATING BEGINNING WITH THE NEXT STEP. DDCU TEMPS NOT TO EXCEED 111 DEG F., RPCM TEMPS NOT TO EXCEED 142 DEG F., AND MDM TEMP NOT TO EXCEED 158 DEG F.

SHUTDOWN MTL LOOP

108-012 KTCN MS1 PCS
NODE 2:TCS:
NODE2 MTL SOTFWARE COMMANDS
'MTL IATCS'

1. CMD: SHUTDOWN - ARM
   PUI: LATX96IM0095K

   GMT _____:_____:_____ (HR:MIN:SEC)

2. VERIFY: SHUTDOWN ARM – "√ " (CHECKMARK)
   (1)
   PUI: LADP08MDC177J

RELEASED - Printed documents may be obsolete; validate prior to use.

SECTION IV - OPERATION INSTRUCTIONS

SEQ/STEP	CMD	RESP	DESCRIPTION	VERIF.

NOTE

MTL SHUTDOWN PROCESS CAN LAST UP TO 150 SECONDS

108-013 KTCN MS1

PCS
NODE 2: TCS:
NODE2 MTL SOTFWARE COMMANDS

“MTL IATCS”

1. CMD: SHUTDOWN – SHUTDOWN
   PUI: LATX96IM0095K

   GMT _____:_____:_____ (HR:MIN:SEC)

   VERIFY:

2. ITCS STATUS – IDLE (0)
   PUI: LADP08MDC173J

3. SHUTDOWN POWER REQUEST – “X” (CHECKMARK) (1)
   PUI: LADP08MDC175J

RELEASED - Printed documents may be obsolete; validate prior to use.

SECTION IV - OPERATION INSTRUCTIONS

SEQ/STEP	CMD	RESP	DESCRIPTION	VERIF.
108-014	KTCN	MS1	PCS NODE 2: TCS:MTL PPA NODE2 MTL PPA COMMANDS “MTL PPA” VERIFY: 1. PUMP SOFTWARE – SHUTDOWN PUI: LADP08MDC764J 2. PUMP SPEED : 0- 54 RPM PUI: N2TI25FC0003U RECORD PUMP SPEED: _____ RPM 3. PPA LR FLOW: _____ KG/HR (<113.4 KG/HR) (<250.0 LB/HR) PUI: N2TI06FM0001R 4. PUMP DP _____ KPA (<20.7 KPA) (<3.0 PSID) PUI: N2TI06SR0401P	
108-015	KTCN	DQCM	RECORD MTL PUMP STOP TIME IN OMI R01120V1 APPENDIX F. GMT _____:_____:_____ (DAY:HR:MIN)	
108-016	KTCN	MS1	PCS C&W SUMMARY PAGE 1. VERIFY NO MT LOOP FAILURE WARNING MESSAGES EXIST ON THE C&W SUMMARY PAGE 2. VERIFY NO MT PUMP FAILURE WARNING MESSAGES EXIST ON TH C&W SUMMARY PAGE	

RELEASED - Printed documents may be obsolete; validate prior to use.

SECTION IV - OPERATION INSTRUCTIONS

SEQ/STEP	CMD	RESP	DESCRIPTION	VERIF.
			MTL TWMV DEACTIVATION	
108-017	KTCN	MS1	PCS NODE 2: TCS: LTL TWMV	
			NODE2 MTL TWMV COMMANDS	
			"MTL TWMV"	
			1. CMD: MTL TWMV SHUTDOWN – ARM EXECUTE PUI: N2DS23SM1902K	
			2. VERIFY: MTL TWMV SHUTDOWN ARM – "√" (CHECKMARK) (1) PUI: N2DS23MD0044J	
			3. CMD: MTL TWMV SHUTDOWN – SHUTDOWN EXECUTE PUI: N2DS23SM1909K	
			4. VERIFY: MTL TWMV SOFTWARE: SHUTDOWN PUI: N2DS23MD0038J	

RELEASED - Printed documents may be obsolete; validate prior to use.

SECTION IV - OPERATION INSTRUCTIONS

SEQ/STEP	CMD	RESP	DESCRIPTION	VERIF.
			REMOVE POWER FROM MTL TWMV	
108-018	KTCN	MS1	PCS NODE 2: TCS: MTL TWMV: RPCM_N21B4A_A_RPC_02 RPCM_N21B4A_A_RPC_02_ “LOAD: N2 THREE WAY MIX VALVE PWR” 1. CMD: RPC POSITION - OPEN PUI: LAPR96IM2305K 2. VERIFY: RPC POSITION – OP PUI: N2PN29FC1017J	
			MTL SFCA DEACTIVATION	
108-019	KTCN	MS1	PCS NODE 2: TCS: MTL SFCA NODE 2 MTL SFCA COMMANDS “MTL SFCA” 1. CMD: SHUTDOWN - ARM PUI: N2DS23SM2401K 2. VERIFY: SHUTDOWN ARM – “√” (CHECKMARK) (1) PUI: N2DS23MD0098J 3. CMD: SHUTDOWN - SHUTDOWN PUI: N2DS23SM2401K 4. VERIFY: SOFTWARE – SHUTDOWN PUI: N2DS23MD0093J	

RELEASED - Printed documents may be obsolete; validate prior to use.

SECTION IV - OPERATION INSTRUCTIONS

SEQ/STEP	CMD	RESP	DESCRIPTION	VERIF.
			MTL SFCA FLOW CONTROL VALVE (FCV) RPC	
108-020	KTCN	MS1	PCS NODE 2: TCS: MTL SFCA: RPCM_N21B4B_B_RPC_16 RPCM_ N21B4B_B_RPC_16 “N2 SFCA MTL FLOW CONTROL VALVE PWR” 1. CMD: RPC POSITION – OPEN PUI: LAPR96IM2338K GMT _____:_____:_____ (HR:MIN:SEC) 2. VERIFY: RPC POSITION – OP PUI: N2PN22FC1031J	
			REMOVE POWER FROM MTL PPA	
108-021	KTCN	MS1	PCS NODE 2: TCS: MTL PPA: RPCM_N21B4A_A_RPC_17 RPCM_N21B4A_A_RPC_17_ “LOAD: N2 PPA MTL PWR” 1. CMD: RPC POSITION – OPEN PUI: LAPR96IM2320K 2. VERIFY: RPC POSITION – PUI: N2PN29FC1032J	

RELEASED - Printed documents may be obsolete; validate prior to use.

SECTION IV - OPERATION INSTRUCTIONS

SEQ/STEP	CMD	RESP	DESCRIPTION	VERIF.
			NODE 2 NADIR 1B4B RPCM HEALTH CHECKS	
			CAUTION IF FOLLOWING TWO STEPS INDICATE ORU HEALTH 'NOT OK' RPCM EEPROM REFRESH STEPS MAY BE REQUIRED TO PREVENT CORRUPTION OF THE SRAM.	
108-022	KEPS	KEP1	TCMS – ORU HEALTH DMON (D_N2_EPS_ORUHEALTH_RPCM.MSID)	
			VERIFY HEALTH OF NODE 2 NADIR RPCM N21B4B A:	
			1. VERIFY DATA FRAME COUNTER – "INCREMENTING"	N2PN21FC0617U
			2. VERIFY POWER ON RESET - <BLANK>	N2PN21FC1005J
			3. VERIFY ORU HEALTH – OK	N2PN21FC1006J
108-023	KEPS	KEP1	TCMS – ORU HEALTH DMON (D_N2_EPS_ORUHEALTH_RPCM.MSID)	
			VERIFY HEALTH OF NODE 2 NADIR RPCM N21B4B B:	
			1. VERIFY DATA FRAME COUNTER – "INCREMENTING"	N2PN22FC0617U
			2. VERIFY POWER ON RESET - <BLANK>	N2PN22FC1005J
			3. VERIFY ORU HEALTH – OK	N2PN22FC1006J
			INHIBIT RPCM N2NAD-1B4B-A RT FDIR AND I/O	
108-024	KCDH	MS1	INHIBIT RT FDIR FOR RPCM N2NAD-1B4B-A	
			PCS: HOME / C&DH ICON / PRIMARY PMCU MDM / LB EPS N2 14 / RT STATUS	
			'RT FDIR STATUS'	
			1. **CMD** 13 RPCM_N21B4B_A INHIBIT FDIR **EXECUTE**	LADD96IM0832K
			2. VERIFY 13 RPCM_N21B4B_A FDIR STATUS – INH	LADP13MD2443J

RELEASED - Printed documents may be obsolete; validate prior to use.

SECTION IV - OPERATION INSTRUCTIONS

SEQ/STEP	CMD	RESP	DESCRIPTION	VERIF.
108-025	KCDH	SSFE	REMOVE RPCM N2NAD-1B4B-A FROM PMCU EXISTENCE	
			CES MATE LOAD AND EXECUTE THE FOLLOWING SCRIPT:	
			SCRIPT NAME: **NODE2_MATE_CMDS.O** CMD INDEX: **A** PUI NAME: USPZ20MDC024L DESCRIPTION: PRIMARY PMCU DATA LOAD / ORU EXISTENCE PPL **VERSION 1010**	
			GMT _____:_____:_____ (HR:MIN:SEC)	
				NV:_____
108-026	KCDH	KFSW	VERIFY PMCU EXISTENCE TABLE PPL LOAD	
			PCS OR TCMS PRIM_PMCA_ORU_EXIST_STATES_SET_PPL VERSION ID = **1010**	LADP13MD2638U
			INHIBIT RPCM N2NAD-1B4B-B RT FDIR & RT I/O	
108-027	KCDH	MS1	INHIBIT RT FDIR FOR RPCM N2NAD-1B4B-B	
			PCS: HOME / C&DH ICON / PRIMARY INT MDM / LB SEPS N2 14 / RT STATUS	
			'RT FDIR STATUS'	
			1. **CMD** 9 RPCM N21B4B_B INHIBIT FDIR **EXECUTE**	LADD96IM0800K
			2. VERIFY 9 RPCM N21B4B_B FDIR STATUS – INH	LADP08MDC337J
108-028	KCDH	MS1	INHIBIT I/O FOR RPCM N2NAD-1B4B-B	
			PCS: HOME / C&DH ICON / PRIMARY INT MDM / LB SEPS N2 14 / RT STATUS	
			'RT STATUS'	
			1. **CMD** 9 RPCM N21B4B_B INHIBIT **EXECUTE**	LADD96IM0809K
			2. VERIFY 9 RPCM N21B4B_B – INH	LADP08MDC366J

RELEASED - Printed documents may be obsolete; validate prior to use.

SECTION IV - OPERATION INSTRUCTIONS

SEQ/STEP	CMD	RESP	DESCRIPTION	VERIF.
			DDCU N2NAD-1B CONVERTER DEACTIVATION	
108-029	KEPS	MS1	PCS ISS HOMEPAGE:NODE 2:EPS: DDCU N2D1B:CONVERTER	
			CMD CONVERTER OFF/ OFF	LAPC96IM0028K
			GMT _____:_____:_____ (HR:MIN:SEC)	
108-030	KEPS	MS1	PCS ISS HOMEPAGE:NODE 2:EPS:DDCU N2D1B	
			RECORD/VERIFY:	
			CONVERTER STATUS = _____ (OFF)	N2PC19FC0123J
			INPUT VOLTAGE = _____ (BD)	N2PC19FC0420V
			OUTPUT VOLTAGE = _____ (0 +/- 3 VDC)	N2PC19FC0421V
			OUTPUT CURRENT = _____ (0 +/- 3.75 AMPS)	N2PC19FC0419C
			TEMP = _____ (BD)	N2PC19FC0415T
			PWR SUPPLY TEMP = _____ DEG C (BD)	N2PC19FC0416T
			BASEPLATE TEMP = _____ DEG C (BD)	N2PC19FC0417T
			DDCU N2NAD-4B CONVERTER DEACTIVATION	
108-031	KEPS	MS1	PCS ISS HOMEPAGE:NODE 2:EPS:DDCU N2D4B:CONVERTER	
			CMD CONVERTER OFF/ OFF	LAPC96IM0028K
			GMT _____:_____:_____ (HR:MIN:SEC)	
108-032	KEPS	MS1	PCS ISS HOMEPAGE:NODE 2:EPS:DDCU N2D4B	
			RECORD/VERIFY:	
			CONVERTER STATUS = _____ (OFF)	N2PC20FC0123J
			INPUT VOLTAGE = _____ (BD)	N2PC20FC0420V
			OUTPUT VOLTAGE = _____ (0 +/- 3 VDC)	N2PC20FC0421V
			OUTPUT CURRENT = _____ (0 +/- 3.75 AMPS)	N2PC20FC0419C
			TEMP = _____ DEG C (BD)	N2PC20FC0415T
			PWR SUPPLY TEMP = _____ DEG C (BD)	N2PC20FC0416T
			BASEPLATE TEMP = _____ DEG C (BD)	N2PC20FC0417T

NV:_____

RELEASED - Printed documents may be obsolete; validate prior to use.

SECTION IV - OPERATION INSTRUCTIONS

SEQ/STEP	CMD	RESP	DESCRIPTION	VERIF.
108-033	KCDH	MS1	INHIBIT FDIR FOR THE N2-1 MDM	
			PCS: HOME / C&DH ICON / PRIMARY INT MDM / LB SYS N2 1 / RT STATUS	
			'RT FDIR STATUS'	
			1. **CMD** 24 MDM N2-1 INHIBIT FDIR **EXECUTE**	LADD96IM0800K
			2. VERIFY 24 MDM N2-1 RT FDIR STATUS-INH	LADP08MDC320J
108-034	KCDH	MS1	INHIBIT I/O TO THE N2-1 MDM	
			PCS: HOME / C&DH ICON / PRIMARY INT MDM / LB SYS N2 1 / RT STATUS	
			'RT STATUS'	
			1. **CMD** 24 MDM N2-1 INHIBIT **EXECUTE**	LADD96IM0809K
			2. VERIFY 24 MDM N2-1 - INH	LADP08MDC349J
108-035	KEPS	MS1	POWER OFF N2-1 (VIA NODE RPCM 1B4A A SWITCH 1) PCS: HOME / NODE 2 / EPS ICON / RPCM N21B4A A / SWITCH 1 ICON	
			1. **CMD** RPC POSITION OPEN	LAPR96IM2304K
			2. VERIFY RPC POSITION - OP	N2PN29FC1016J
			GMT _____:_____:_____ (HR:MIN:SEC)	
				NV:_____

RELEASED - Printed documents may be obsolete; validate prior to use.

SECTION IV - OPERATION INSTRUCTIONS

SEQ/STEP	CMD	RESP	DESCRIPTION	VERIF.
			NODE 2 STARBOARD 1B4A RPCM HEALTH CHECKS	
108-036	KEPS	KEP1	TCMS – ORU HEALTH DMON (D_N2_EPS_ORUHEALTH_RPCM.MSID)	
			VERIFY HEALTH OF NODE 2 STBD RPCM N21B4A A:	
			1. VERIFY DATA FRAME COUNTER – "INCREMENTING"	N2PN29FC0617U
			2. VERIFY POWER ON RESET - <BLANK>	N2PN29FC1005J
			3. VERIFY ORU HEALTH – OK	N2PN29FC1006J
			VERIFY HEALTH OF NODE 2 STBD RPCM N21B4A B:	
			4. VERIFY DATA FRAME COUNTER – "INCREMENTING"	N2PN30FC0617U
			5. VERIFY POWER ON RESET - <BLANK>	N2PN30FC1005J
			6. VERIFY ORU HEALTH – OK	N2PN30FC1006J
			VERIFY HEALTH OF NODE 2 STBD RPCM N21B4A C:	
			7. VERIFY DATA FRAME COUNTER – "INCREMENTING"	N2PN31FC0617U
			8. VERIFY POWER ON RESET - <BLANK>	N2PN31FC1005J
			9. VERIFY ORU HEALTH – OK	N2PN31FC1006J
			INHIBIT RPCM N2STB-1B4A-A THROUGH –C RT FDIR & RT IO	
108-037	KCDH	MS1	INHIBIT RT FDIR FOR RPCM N2STB-1B4A-A	
			PCS: HOME / C&DH ICON / PRIMARY INT MDM / LB SEPS N2 14 / RT STATUS	
			'RT FDIR STATUS'	
			1. **CMD** 13 RPCM N21B4A_A INHIBIT FDIR **EXECUTE**	LADD96IM0800K
			2. VERIFY 13 RPCM N21B4A_A FDIR STATUS – INH	LADP08MDC338J

RELEASED - Printed documents may be obsolete; validate prior to use.

SECTION IV - OPERATION INSTRUCTIONS

SEQ/STEP	CMD	RESP	DESCRIPTION	VERIF.
108-038	KCDH	MS1	INHIBIT RT I/O COMM FOR RPCM N2STB-1B4A-A	
			PCS: HOME / C&DH ICON / PRIMARY INT MDM / LB SEPS N2 14 / RT STATUS	
			'RT STATUS'	
			1. **CMD** 13 RPCM N21B4A A INHIBIT **EXECUTE**	LADD96IM0809K
			2. VERIFY 13 RPCM N21B4A A – INH	LADP08MDC367J
108-039	KCDH	MS1	INHIBIT FDIR FOR RPCM N2STB-1B4A-B	
			PCS: HOME / C&DH ICON / PRIMARY PMCU MDM / LB EPS N2 14 / RT STATUS	
			'RT FDIR STATUS'	
			1. **CMD** 16 RPCM_N21B4A_B INHIBIT FDIR **EXECUTE**	LADD96IM0832K
			2. VERIFY 16 RPCM_N21B4A_B FDIR STATUS – INH	LADP13MD2449J
108-040	KCDH	MS1	INHIBIT RT FDIR FOR RPCM N2STB-1B4A-C	
			PCS HOME / C&DH ICON / PRI PMCU MDM ICON / LB EPS N2 14 / RT STATUS	
			'RT FDIR STATUS'	
			1. **CMD** 15 RPCM N21B4A_C INHIBIT FDIR **EXECUTE**	LADD96IM0832K
			2. VERIFY 15 RPCM N21B4A_C FDIR STATUS – INH	LADP13MD2797J
108-041	KCDH	SSFE	REMOVE N2STB-1B4A-B AND N2STB-1B4A-C FROM PMCU EXISTENCE	
			CES MATE LOAD AND EXECUTE THE FOLLOWING SCRIPT:	
			SCRIPT NAME: **NODE2_MATE_CMDS.O**	
			CMD INDEX: **B**	
			PUI NAME: USPZ20MDC024L	
			DESCRIPTION: PRIMARY PMCU DATA LOAD / ORU EXISTENCE PPL **VERSION 1011**	
			GMT _____:_____:_____ (HR:MIN:SEC)	

NV:_____

RELEASED - Printed documents may be obsolete; validate prior to use.

SECTION IV - OPERATION INSTRUCTIONS

SEQ/STEP	CMD	RESP	DESCRIPTION	VERIF.
108-042	KCDH	KFSW	VERIFY PMCU EXISTENCE TABLE PPL LOAD	
			PCS OR TCMS PRIM_PMCA_ORU_EXIST_STATES_SET_PPL VERSION ID = **1011**	LADP13MD2638U
			DEACTIVATE DDCUS N2STB-1B & N2STB-4A	
			DDCU N2STBD-1B CONVERTER DEACTIVATION	
108-043	KEPS	MS1	PCS ISS HOMEPAGE:NODE 2:EPS:DDCU_N2STBD-1B:CONVERTER	
			CMD CONVERTER OFF/ OFF	LAPC96IM0028K
108-044	KEPS	MS1	PCS ISS HOMEPAGE:NODE 2:EPS:DDCU N2S1B	
			RECORD/VERIFY:	
			CONVERTER STATUS = _____ (OFF)	N2PC15FC0123J
			INPUT VOLTAGE = _____ (BD)	N2PC15FC0420V
			OUTPUT VOLTAGE = _____ (0 +/- 3 VDC)	N2PC15FC0421V
			OUTPUT CURRENT = _____ (0 +/- 3.75 AMPS)	N2PC15FC0419C
			TEMP = _____ DEG C (BD)	N2PC15FC0415T
			PWR SUPPLY TEMP = _____ DEG C (BD)	N2PC15FC0416T
			BASEPLATE TEMP = _____ DEG C (BD)	N2PC15FC0417T
			GMT _____:_____:_____ (DAY:HR:MIN)	

RELEASED - Printed documents may be obsolete; validate prior to use.

SECTION IV - OPERATION INSTRUCTIONS

SEQ/STEP	CMD	RESP	DESCRIPTION	VERIF.
			DDCU N2STBD-4A CONVERTER DEACTIVATION	
108-045	KEPS	MS1	PCS ISS HOMEPAGE:NODE 2:EPS:DDCU N2S4A:CONVERTER	
			CMD CONVERTER OFF/ OFF	LAPC96IM0028K
108-046	KEPS	MS1	PCS ISS HOMEPAGE:NODE 2:EPS:DDCU N2S4A	
			RECORD/VERIFY:	
			CONVERTER STATUS = _____ (OFF)	N2PC16FC0123J
			INPUT VOLTAGE = _____ (BD)	N2PC16FC0420V
			OUTPUT VOLTAGE = _____ (0 +/- 3 VDC)	N2PC16FC0421V
			OUTPUT CURRENT = _____ (0 +/- 3.75 AMPS)	N2PC16FC0419C
			TEMP = _____ DEG C (BD)	N2PC16FC0415T
			PWR SUPPLY TEMP = _____ DEG C (BD)	N2PC16FC0416T
			BASEPLATE TEMP = _____ DEG C (BD)	N2PC16FC0417T
108-047	TIE PTC 052	PTC DKQM	NODE 2 A STRING PARTIAL DEACTIVATION COMPLETE.	
			GMT _____:_____:_____ (DAY:HR:MIN)	

NV:_____

RELEASED - Printed documents may be obsolete; validate prior to use.

SECTION IV - OPERATION INSTRUCTIONS

SEQ/STEP	CMD	RESP	DESCRIPTION	VERIF.
109-000			**NODE 2 A STRING RE-ACTIVATION**	
109-001	PTC	DKQM	RECORD THE FOLLOWING INFORMATION: SEQ/STEP THAT CALLED THIS SETUP _____ GMT _____:_____:_____ (DAY:HR:MIN)	
				NV:_____
			NOTE THIS SEQUENCE WILL BE PERFORMED IN PARALLEL WITH JEM A STRING ACTIVATION AFTER CONVERTER ACTIVATION OF DDCU N2STBD-1B & N2STBD-4A ARE COMPLETE.	
			NOTE NODE 2 THERMAL CRITICAL WINDOW BEGAN IN THE CALLING SEQUENCE WHEN DDCU CONVERTERS BEGAN OUTPUTTING POWER AND WILL BE COMPLETE WITH MTL REACTIVATION.	
109-002	KCDH	SSFE	ADD RPCM N2STBD-1B4A-B & RPCM N2STBD-1B4A-C TO PMCU EXISTENCE CES MATE LOAD AND EXECUTE THE FOLLOWING SCRIPT: SCRIPT NAME: **NODE2_MATE_CMDS.O** CMD INDEX: **A** PUI NAME: USPZ20MDC024L DESCRIPTION: PRIMARY PMCU DATA LOAD / ORU EXISTENCE PPL **VERSION 1010** GMT _____:_____:_____ (HR:MIN:SEC)	
				NV:_____
109-003	KCDH	KFSW	VERIFY PMCU EXISTENCE TABLE PPL LOAD PCS OR TCMS PRIM_PMCA_ORU_EXIST_STATES_SET_PPL VERSION ID = **1010**	LADP13MD2638U

RELEASED - Printed documents may be obsolete; validate prior to use.

SECTION IV - OPERATION INSTRUCTIONS

SEQ/STEP	CMD	RESP	DESCRIPTION	VERIF.
109-004	KCDH	MS1	VERIFY RT I/O COMM IS PRESENT FOR RPCM N2STB-1B4A-B	
			PCS: HOME / C&DH ICON / PRIMARY PMCU MDM / LB EPS N2 14 / RT STATUS	
			'RT FAILED STATUS'	
			VERIFY	
			1. 16 RPCM_N21B4A_B RT FAILED STATUS-<BLANK>	LADP13MD2448J
			2. 16 RPCM_N21B4A_B RT COMM FAILED STATUS - <BLANK>	LADP13MD2447J
109-005	KCDH	MS1	VERIFY INTEGRATION COUNTER RPCM N2STB-1B4A-B	
			PCS:HOME/NODE 2/EPS ICON/EPS:NODE 2/RPCM N21B4A B	
			VERIFY INTEGRATION COUNTER – INCREMENTING	N2PN30FC0617U
			NOTE	
			COMMON CLEAR FOR THE FOLLOWING RPCM WILL BE PERFORMED AFTER MTL LOOP ACTIVATION.	
109-006	KCDH	MS1	ENABLE RT FDIR FOR RPCM N2STB-1B4A-B	
			PCS: HOME / C&DH ICON / PRIMARY PMCU MDM / LB EPS N2 14 / RT STATUS	
			'RT FDIR STATUS'	
			1. **CMD** 16 RPCM_N21B4A_B ENABLE FDIR **EXECUTE**	LADD96IM0834K
			2. VERIFY 16 RPCM_N21B4A_B FDIR STATUS – ENA	LADP13MD2449J

RELEASED - Printed documents may be obsolete; validate prior to use.

SECTION IV - OPERATION INSTRUCTIONS

SEQ/STEP	CMD	RESP	DESCRIPTION	VERIF.
109-007	KCDH	MS1	VERIFY RT I/O COMM FOR RPCM N2STB-1B4A-C	
			PCS: HOME / C&DH ICON / PRIMARY PMCU MDM / LB EPS N2 14 / RT STATUS	
			'RT FAILED STATUS'	
			VERIFY	
			1. 15 RPCM RPCM_N21B4A_C RT FAILED STATUS - <BLANK>	LADP13MD2796J
			2. 15 RPCM RPCM_N21B4A_C RT COMM FAILED STATUS - <BLANK>	LADP13MD2795J
109-008	KCDH	MS1	VERIFY INTEGRATION COUNTER RPCM N2STB-1B4A-C	
			PCS:HOME/NODE 2/EPS ICON/EPS:NODE 2/RPCM N21B4A C	
			VERIFY INTEGRATION COUNTER – INCREMENTING	N2PN31FC0617U
			NOTE	
			COMMON CLEAR FOR THE FOLLOWING RPCM WILL BE PERFORMED AFTER MTL LOOP ACTIVATION.	
109-009	KCDH	MS1	ENABLE RT FDIR FOR RPCM N2STB-1B4A-C	
			PCS HOME / C&DH ICON / PRI PMCU MDM ICON / LB EPS N2 14 / RT STATUS	
			'RT FDIR STATUS'	
			1. **CMD** 15 RPCM_N21B4A_C ENABLE FDIR **EXECUTE**	LADD96IM0834K
			2. VERIFY 15 RPCM_N21B4A_C FDIR STATUS – ENA	LADP13MD2797J
109-010	KCDH	MS1	ESTABLISH RT I/O COMM FOR RPCM N2STB-1B4A-A	
			PCS: HOME / C&DH ICON / PRIMARY INT MDM / LB SEPS N2 14 / RT STATUS	
			'RT STATUS'	
			1. **CMD** 13 RPCM N21B4A_A ENABLE **EXECUTE**	LADD96IM0808K
			2. VERIFY 13 RPCM N21B4A_A – ENA	LADP08MDC367J

RELEASED - Printed documents may be obsolete; validate prior to use.

SECTION IV - OPERATION INSTRUCTIONS

SEQ/STEP	CMD	RESP	DESCRIPTION	VERIF.
109-011	KCDH	MS1	VERIFY INTEGRATION COUNTER RPCM N2STB-1B4A-A	
			PCS:HOME/NODE 2/EPS ICON/EPS:NODE 2/RPCM N21B4A A	
			VERIFY INTEGRATION COUNTER – INCREMENTING	N2PN29FC0617U
			NOTE	
			COMMON CLEAR FOR THE FOLLOWING RPCM WILL BE PERFORMED AFTER MTL LOOP ACTIVATION.	
109-012	KCDH	MS1	ENABLE RT FDIR FOR RPCM N2STB-1B4A-A	
			PCS HOME / C&DH ICON / PRIMARY INT MDM / LB SEPS N2 14 / RT STATUS	
			'RT FDIR STATUS'	
			1. **CMD** 13 RPCM N21B4A_A ENABLE FDIR **EXECUTE**	LADD96IM0630K
			2. VERIFY 13 RPCM N21B4A_A FDIR STATUS – ENA	LADP08MDC338J
			'RT COMM FAILED STATUS'	
			3. 13 RPCM N21B4A-A RT COMM FAILED STATUS - <BLANK>	LADP08MDC396J
			N2-1 MDM POWER ON AND CHECKOUT	
109-013	KEPS	MS1	CLOSE SWITCH 1 ON NODE RPCM 1B4A A (N2-1 MDM) PCS: HOME / NODE 2 / EPS ICON / RPCM N21B4A A / SWITCH 1 ICON	
			1. **CMD** RPC POSITION CLOSE	LAPR96IM2076K
			2. VERIFY RPC POSITION - CL	N2PN29FC1016J
			GMT _____:_____:_____ (HR:MIN:SEC)	
				NV:_____
109-014	KCDH	MS1	ENABLE I/O TO THE N2-1 MDM	
			PCS: HOME / C&DH ICON / PRIMARY INT MDM / LB SYS N2 1 / RT STATUS	
			'RT STATUS'	
			1. **CMD** 24 MDM N2-1 ENABLE **EXECUTE**	LADD96IM0808K
			2. VERIFY 24 MDM N2-1 - ENA	LADP08MDC349J

RELEASED - Printed documents may be obsolete; validate prior to use.

SECTION IV - OPERATION INSTRUCTIONS

SEQ/STEP	CMD	RESP	DESCRIPTION	VERIF.
			NOTE THE NEXT 7 STEPS WILL SATISFY OMRS A3000MI.100-D. THE OMRS FLAG WILL BE PLACED AFTER THE FINAL STEP.	
			NOTE IT MAY TAKE UP TO 3 MINUTES FOR N2-1 MDM TO COMPLETE POST PRIOR TO VERIFICATION OF THE NEXT STEP.	
109-015	KCDH	MS1	RECORD N2-1 MDM STATUS PCS: HOME / C&DH ICON / N2-1 MDM ICON RECORD/VERIFY: 1. SYNC STATUS - _____(BD) 2. FRAME COUNTER - INCREMENTING 3. PROCESSING STATE – OPERATIONAL	 N2DS23MD4347J N2DS23MD4353J N2DS23MD4984J NV:_____

RELEASED - Printed documents may be obsolete; validate prior to use.

SECTION IV - OPERATION INSTRUCTIONS

SEQ/STEP	CMD	RESP	DESCRIPTION	VERIF.
			NOTE	
			PERFORM THE NEXT STEP IF THE MDM IS OUT OF SYNC.	
109-016	KCDH	MS1	COMMAND N2-1 MDMS TO SYNC	
			PCS: HOME / C&DH ICON / N2-1 MDM ICON / SYNC STATUS	
			1. **CMD** SYNC TO BIA **EXECUTE**	N2DS23SM0510K
			2. VERIFY SYNC STATUS – IN SYNC	N2DS23MD4347J
				NOT PERFORMED:_____
109-017	KCDH	MS1	ANNOTATE THE N2-1 MDM TEMPERATURE	
			PCS: HOME / C&DH ICON / N2-1 MDM ICON	
			RECORD N2-1 MDM TEMP = _____ DEG C [VERIFY LESS THAN 70 DEG C (158 DEG F)]	N2DS23MD5169T
109-018	KCDH	MS1	ENABLE FDIR FOR THE N2-1 MDM	
			PCS:HOME/C&DH ICON/PRIMARY INT MDM/LB SYS N2 1/ RT STATUS	
			‘RT FDIR STATUS’	
			1. CMD 24 MDM N2-1 ENABLE FDIR EXECUTE	LADD96IM0630K
			2. VERIFY 24 MDM N2-1 RT FDIR STATUS – ENA	LADP08MDC320J
			‘RT COMM FAILED STATUS’	
			3. VERIFY 24 MDM N2-1 RT COMM FAILED STATUS - <BLANK>	LADP08MDC378J

RELEASED - Printed documents may be obsolete; validate prior to use.

SECTION IV - OPERATION INSTRUCTIONS

SEQ/STEP	CMD	RESP	DESCRIPTION		VERIF.
109-019	KCDH	MS1	RECORD N2-1 MDM BIT SUMMARY TABLE - A		
			PCS: HOME / C&DH ICON / N2-1 MDM ICON / MDM BIT STATUS		
			'WORD 1 SUMMARY' (RECORD X IF APPLICABLE):		
			HARD FAIL	_____	N2DS23MD4241J
			REV SOFT FAIL	_____	N2DS23MD4242J
			SOFT FAIL	_____	N2DS23MD4243J
			POST STAT	_____	N2DS23MD4244J
			BIT STAT	_____	N2DS23MD4245J
			I/O BUS STAT	_____	N2DS23MD4246J
			I/O LIST STAT	_____	N2DS23MD4247J
			SX CARD SLOT	_____	N2DS23MD4248J
			I/O BIT STAT	_____	N2DS23MD4249J
			POST IN PROG	_____	N2DS23MD4250J
			'WORD 29'		
			BST UPDATE COUNTER	_____(BD)	N2DS23MD4323J
109-020	KCDH	MS1	CLEAR LATCHED DATA IN BST-A		
			PCS: HOME / C&DH ICON / N2-1 MDM ICON / MDM UTILITIES		
			'CLEAR LATCHED DATA IN BST-A'		
			CMD CLEAR **EXECUTE**		N2DS23SM0509K

RELEASED - Printed documents may be obsolete; validate prior to use.

SECTION IV - OPERATION INSTRUCTIONS

SEQ/STEP	CMD	RESP	DESCRIPTION		VERIF.
109-021	KCDH	MS1	RECORD N2-1 MDM BIT SUMMARY TABLE - A		
			PCS: HOME / C&DH ICON / N2-1 MDM ICON / MDM BIT STATUS		
			'WORD 1 SUMMARY' (RECORD X IF APPLICABLE):		
			HARD FAIL	_____	N2DS23MD4241J
			REV SOFT FAIL	_____	N2DS23MD4242J
			SOFT FAIL	_____	N2DS23MD4243J
			POST STAT	_____	N2DS23MD4244J
			BIT STAT	_____	N2DS23MD4245J
			I/O BUS STAT	_____	N2DS23MD4246J
			I/O LIST STAT	_____	N2DS23MD4247J
			SX CARD SLOT	_____	N2DS23MD4248J
			I/O BIT STAT	_____	N2DS23MD4249J
			POST IN PROG	_____	N2DS23MD4250J
			'WORD 29'		
			BST UPDATE COUNTER	_____(BD)	N2DS23MD4323J

RELEASED - Printed documents may be obsolete; validate prior to use.

SECTION IV - OPERATION INSTRUCTIONS

SEQ/STEP	CMD	RESP	DESCRIPTION	VERIF.
109-022	KCDH	KFSW	RECORD N2-1 MDM BIT SUMMARY TABLE - B	
			TCMS N2-1 MDM BIT SUMMARY TABLE A & B DISPLAY	
			1. 'BST B DATA ELEMENTS' RECORD THE FOLLOWING WORDS: SLOT 3 (CH 0-15) _____ SLOT 3 (CH 16-31) _____ SLOT 4 (CH 0-15) _____ SLOT 4 (CH 16-31) _____ SLOT 5 (CH 0-15) _____ SLOT 5 (CH 16-31) _____ SLOT 7 (CH 0-15) _____ SLOT 7 (CH 16-31) _____ SLOT 8 (CH 0-15) _____ SLOT 8 (CH 16-31) _____ SLOT 9 (CH 0-15) _____ SLOT 9 (CH 16-31) _____ SLOT 10 (CH 0-15) _____ SLOT 10 (CH 16-31) _____ SLOT 13 (CH 0-15) _____ SLOT 13 (CH 16-31) _____ SLOT 14 (CH 0-15) _____ SLOT 14 (CH 16-31) _____ SLOT 15 (CH 0-15) _____ SLOT 15 (CH 16-31) _____	
			2. VERIFY THAT ALL DATA WORDS ARE CONSISTENT WITH THE CURRENT HARDWARE CONFIGURATION	
			~OMRSD A3000MI.100-D (CDH N2-1 MDM STATE, FRAME COUNT, SYNC STAT, BST)	
			DDCU N2NAD-1B ACTIVATION STATUS	
109-023	KEPS	MS1	PCS ISS HOMEPAGE:NODE 2:EPS:DDCU N2D1B	
			VERIFY: INTEGRATION COUNTER – INCREMENTING	N2PC19FC0408U

RELEASED - Printed documents may be obsolete; validate prior to use.

SECTION IV - OPERATION INSTRUCTIONS

SEQ/STEP	CMD	RESP	DESCRIPTION	VERIF.
109-024	KEPS	MS1	PCS ISS HOMEPAGE:NODE 2:EPS:DDCU N2D1B	
			RECORD/VERIFY:	
			CONVERTER STATUS = _____ (OFF)	N2PC19FC0123J
			INPUT VOLTAGE = _____ (BD)	N2PC19FC0420V
			OUTPUT VOLTAGE = _____ (0 +/- 3 VDC)	N2PC19FC0421V
			OUTPUT CURRENT = _____ (0 +/- 3.75 AMPS)	N2PC19FC0419C
			TEMP = _____ (< 43.8 °C)	N2PC19FC0415T
			PWR SUPPLY TEMP = _____ (< 43.8 °C)	N2PC19FC0416T
			BASEPLATE TEMP = _____ (< 43.8 °C)	N2PC19FC0417T
			DDCU N2NAD-1B CONVERTER ACTIVATION	
109-025	KEPS	MS1	PCS ISS HOMEPAGE:NODE 2:EPS:DDCU N2D1B:CONVERTER	
			1. **CMD** CONVERTER ON/ ARM	LAPC96IM0029K
			2. **CMD** CONVERTER ON/ ON	LAPC96IM0029K
			GMT _____:_____:_____ (HR:MIN:SEC)	
109-026	KEPS	MS1	PCS ISS HOMEPAGE:NODE 2:EPS:DDCU N2D1B	
			RECORD/VERIFY:	
			CONVERTER STATUS = _____ (ON)	N2PC19FC0123J
			INPUT VOLTAGE = _____ (BD)	N2PC19FC0420V
			OUTPUT VOLTAGE = _____ (124.5 +/- 3 VDC)	N2PC19FC0421V
			OUTPUT CURRENT = _____ (0-5 AMPS)	N2PC19FC0419C
			~OMRSD A3000MI.100-D (EPS N2NAD-1B)	
			DDCU N2NAD-4B ACTIVATION STATUS	
109-027	KEPS	MS1	PCS ISS HOMEPAGE:NODE 2:EPS:DDCU N2D4B	
			VERIFY:	
			INTEGRATION COUNTER – INCREMENTING	N2PC20FC0408U

RELEASED - Printed documents may be obsolete; validate prior to use.

SECTION IV - OPERATION INSTRUCTIONS

SEQ/STEP	CMD	RESP	DESCRIPTION	VERIF.
109-028	KEPS	MS1	PCS ISS HOMEPAGE:NODE 2:EPS:DDCU N2D4B	
			RECORD/VERIFY:	
			CONVERTER STATUS = _____ (OFF)	N2PC20FC0123J
			INPUT VOLTAGE = _____ (BD)	N2PC20FC0420V
			OUTPUT VOLTAGE = _____ (0 +/- 3 VDC)	N2PC20FC0421V
			OUTPUT CURRENT = _____ (0 +/- 3.75 AMPS)	N2PC20FC0419C
			TEMP = _____ (< 43.8 °C)	N2PC20FC0415T
			PWR SUPPLY TEMP = _____ (< 43.8 °C)	N2PC20FC0416T
			BASEPLATE TEMP = _____ (< 43.8 °C)	N2PC20FC0417T
			DDCU N2NAD-4B CONVERTER ACTIVATION	
109-029	KEPS	MS1	PCS ISS HOMEPAGE:NODE 2:EPS:DDCU N2D4B:CONVERTER	
			1. **CMD** CONVERTER ON/ ARM	LAPC96IM0029K
			2. **CMD** CONVERTER ON/ ON	LAPC96IM0029K
			GMT _____:_____:_____ (HR:MIN:SEC)	

RELEASED - Printed documents may be obsolete; validate prior to use.

SECTION IV - OPERATION INSTRUCTIONS

SEQ/STEP	CMD	RESP	DESCRIPTION	VERIF.
109-030	KEPS	MS1	PCS ISS HOMEPAGE:NODE 2:EPS:DDCU N2D4B	
			RECORD/VERIFY:	
			CONVERTER STATUS = _____ (ON)	N2PC20FC0123J
			INPUT VOLTAGE = _____ (BD)	N2PC20FC0420V
			OUTPUT VOLTAGE = _____ (124.5 +/- 3 VDC)	N2PC20FC0421V
			OUTPUT CURRENT = _____ (0-5 AMPS)	N2PC20FC0419C
			~OMRSD A3000MI.100-D (EPS N2NAD-4B)	
			RPCM N2NAD-1B4B-A AND -B ACTIVATION	
109-031	KCDH	SSFE	ADD RPCM N2NAD-1B4B-A TO PMCU EXISTENCE	
			CES MATE LOAD AND EXECUTE THE FOLLOWING SCRIPT:	
			SCRIPT NAME: **NODE2_MATE_CMDS.O** CMD INDEX: **9** PUI NAME: USPZ20MDC024L DESCRIPTION: PRIMARY PMCU DATA LOAD / ORU EXISTENCE PPL **VERSION 1009**	
			GMT _____:_____:_____ (HR:MIN:SEC)	
				NV:_____
109-032	KCDH	KFSW	VERIFY PMCU EXISTENCE TABLE PPL LOAD	
			PCS OR TCMS PRIM_PMCA_ORU_EXIST_STATES_SET_PPL VERSION ID = **1009**	LADP13MD2638U
109-033	KCDH	MS1	VERIFY RT I/O COMM FOR RPCM N2NAD-1B4B-A	
			PCS: HOME / C&DH ICON / PRIMARY PMCU MDM / LB EPS N2 14 / RT STATUS	
			'RT FAILED STATUS'	
			VERIFY	
			1. 13 RPCM_N2D1B4B_A RT FAILED STATUS - <BLANK>	LADP13MD2442J
			2. 13 RPCM_N2D1B4B_A RT COMM FAILED STATUS - <BLANK>	LADP13MD2441J

RELEASED - Printed documents may be obsolete; validate prior to use.

SECTION IV - OPERATION INSTRUCTIONS

SEQ/STEP	CMD	RESP	DESCRIPTION	VERIF.
109-034	KCDH	MS1	VERIFY INTEGRATION COUNTER RPCM N2NAD-1B4B-A	
			PCS: HOME/NODE2/EPS ICON/EPS:NODE2/RPCM N21B4B A	
			VERIFY INTEGRATION COUNTER – INCREMENTING	N2PN21FC0617U
			NOTE	
			COMMON CLEAR FOR THE FOLLOWING RPCM WILL BE PERFORMED AFTER MTL LOOP ACTIVATION.	
109-035	KCDH	MS1	ENABLE RT FDIR FOR RPCM N2NAD-1B4B-A	
			PCS: HOME / C&DH ICON / PRIMARY PMCU MDM / LB EPS N2 14 / RT STATUS	
			'RT FDIR STATUS'	
			1. **CMD** 13 RPCM_N2D1B4B_A ENABLE FDIR **EXECUTE**	LADD96IM0834K
			2. VERIFY 13 RPCM_N2D1B4B_A FDIR STATUS – ENA	LADP13MD2443J
109-036	KCDH	MS1	ENABLE I/O FOR RPCM N2NAD-1B4B-B	
			PCS: HOME / C&DH ICON / PRIMARY INT MDM / LB SEPS N2 14 / RT STATUS	
			'RT STATUS'	
			1. **CMD** 9 RPCM N21B4B_B ENABLE **EXECUTE**	LADD96IM0808K
			2. VERIFY 9 RPCM N21B4B_B – ENA	LADP08MDC366J
109-037	KCDH	MS1	VERIFY INTEGRATION COUNTER RPCM N2NAD-1B4B-B	
			PCS:HOME/NODE 2/EPS ICON/EPS:NODE 2/RPCM N21B4B B	
			VERIFY INTEGRATION COUNTER – INCREMENTING	N2PN22FC0617U

RELEASED - Printed documents may be obsolete; validate prior to use.

SECTION IV - OPERATION INSTRUCTIONS

SEQ/STEP	CMD	RESP	DESCRIPTION	VERIF.
			NOTE	
			COMMON CLEAR FOR THE FOLLOWING RPCM WILL BE PERFORMED AFTER MTL LOOP ACTIVATION.	
109-038	KCDH	MS1	ENABLE RT FDIR FOR RPCM N2NAD-1B4B-B	
			PCS: HOME / C&DH ICON / PRIMARY INT MDM / LB SEPS N2 14 / RT STATUS	
			'RT FDIR STATUS'	
			1. **CMD** 9 RPCM N21B4B_B ENABLE FDIR **EXECUTE**	LADD96IM0630K
			2. VERIFY 9 RPCM N21B4B_B FDIR STATUS – ENA	LADP08MDC337J
			'RT COMM FAILED STATUS'	
			3. VERIFY 9 RPCM N21B4B_B RT COMM FAILED STATUS - <BLANK>	LADP08MDC395J

RELEASED - Printed documents may be obsolete; validate prior to use.

SECTION IV - OPERATION INSTRUCTIONS

SEQ/STEP	CMD	RESP	DESCRIPTION	VERIF.
			NODE 2 A STRING ITCS RE-ACTIVATION	
109-039	KTCN	SFSG	RECORD RACK SIMULATOR MTL & LTL TEMP SENSORS:	
		KFWT	1. RACK SIMULATOR MTL TEMP: _____DEG F	
			2. RACK SIMULATOR LTL TEMP: _____DEG F	
				T:_____
			NOTE PERFORM THE NEXT TWO STEPS IF RACK SIMULATOR LTL & MTL TEMPERATURE SENSORS NEED TO BE CONFIGURED TO 67 +/- 5 DEG F.	
109-040	KTCN	SFSG KFWT	CONFIGURE RACK SIMULATOR LTL & MTL TEMPERATURE SENSORS TO 67 +/- 5 DEG F BY WAD #:_____	
				T:_____
109-041	KTCN	SFSG KFWT	VERIFY 1. RACK SIMULATOR MTL TEMP: _____DEG F (62 – 72 DEG F) 2. RACK SIMULATOR LTL TEMP: _____DEG F (62 – 72 DEG F)	
				T:_____
				NOT PERFORMED:_____ (PREVIOUS 2 STEPS)

RELEASED - Printed documents may be obsolete; validate prior to use.

SECTION IV - OPERATION INSTRUCTIONS

SEQ/STEP	CMD	RESP	DESCRIPTION	VERIF.
			NOTE VISUALLY MONITOR NODE 2 BOTH INTERNALLY AND EXTERNALLY FOR LEAKAGE. HAVE A SUPPLY OF CLEAN ROOM DRY WIPES STAGED TO ABSORB ANY COOLANT DRIPS OR CONDENSATION THAT MAY RESULT FROM TESTING. ENSURE PERSONNEL HAVE BEEN BRIEFED ON ELEMENT IATCS LEAK OR SPILL PROCEDURES IN APPENDIX Z.	
109-042	KTCN	MS1	PCS NODE 2: TCS “PPA MTL” RECORD: 1. PUMP IN PRESS, KPA : _____KPA PUI: N2TI06SR0101P 2. AVG ACCUM QTY, %: _____% PUI: N2DS23MD0075Q	
			NOTE PERFORM THE NEXT 2 STEPS IF THE ITCS MTL PPA INLET PRESSURE AND AVERAGE ACCUMULATOR QUANTITY NEED TO BE CONFIGURED TO 24.0 – 28.0 PSIA (165.5 – 193.0 KPA) AND <85% RESPECTIVELY.	
109-043	KTCN	KFWT	CONFIGURE THE ITCS MTL PPA INLET PRESSURES AND AVERAGE ACCUMULATOR QUANTITIES TO 24.0 – 28.0 PSIA (165.5 – 193.0 KPA) AND < 85% RESPECTIVELY BY WAD #: _____	
				T:_____

RELEASED - Printed documents may be obsolete; validate prior to use.

SECTION IV - OPERATION INSTRUCTIONS

SEQ/STEP	CMD	RESP	DESCRIPTION	VERIF.
109-044	KTCN	MS1	PCS NODE 2: NODE2: TCS “PPA MTL” VERIFY: 1. PMP IN PRESS, KPA : _____KPA (165.5 – 193.0 KPA) (24.0 – 28.0 PSIA) PUI: N2TI06SR0101P 2. AVG ACCUM QTY, % : _____%(BASE LINE) (<85%) PUI: N2DS23MD0075Q NOT PERFORMED:_____ (PREVIOUS 2 STEPS) **NODE 2 ITCS MT COMPONENTS POWERED FOR ACTIVATION** **MTL SHUTOFF VALVE (SOV) RPC**	
109-045	KTCN	MS1	PCS NODE 2: TCS: MTL SFCA: RPCM_N21B4B_B_RPC_01 ‘RPCM_N21B4B_B_RPC_01’ ‘N2 SFCA MTL SHUTOFF VALVE (ZENITH ALCOVE)’ 1. CMD: RPC POSITION - CLOSE PUI: LAPR96IM2095K GMT _____:_____:_____ (HR:MIN:SEC) 2. VERIFY: RPC POSITION – CL PUI: N2PN22FC1016J	

RELEASED - Printed documents may be obsolete; validate prior to use.

SECTION IV - OPERATION INSTRUCTIONS

SEQ/STEP	CMD	RESP	DESCRIPTION	VERIF.
			MTL NIA ACCUMULATOR VENT VALVE (AVV) RPC	
109-046	KTCN	MS1	PCS NODE 2: TCS: MTL PPA: NODE2 MTL NIA COMMANDS: RPCM_N21B4B_B_RPC_02	
			RPCM_N21B4B_B_RPC_02	
			"LOAD: N2 NIA MTL VENT VALVE PWR"	
			1. CMD: RPC POSITION – CLOSE PUI: LAPR96IM2096K	
			GMT _____:_____:_____ (HR:MIN:SEC)	
			2. VERIFY: RPC POSITION – CL PUI: N2PN22FC1017J	
			MTL NIA ISOLATION VALVE (NIV) RPC	
109-047	KTCN	MS1	PCS NODE 2: TCS: MTL PPA: NODE2 MTL NIA COMMANDS: RPCM_N21B4B_B_RPC_15	
			RPCM_ N21B4B_B_RPC_15	
			"LOAD: N2 NIA MTL ISOLATION VALVE PWR"	
			1. CMD: RPC POSITION – CLOSE PUI: LAPR96IM2109K	
			GMT _____:_____:_____ (HR:MIN:SEC)	
			2. VERIFY: RPC POSITION – CL PUI: N2PN22FC1030J	

RELEASED - Printed documents may be obsolete; validate prior to use.

SECTION IV - OPERATION INSTRUCTIONS

SEQ/STEP	CMD	RESP	DESCRIPTION	VERIF.
			MTL SFCA FLOW CONTROL VALVE (FCV) RPC	
109-048	KTCN	MS1	PCS NODE 2: TCS: MTL SFCA: RPCM_N21B4B_B_RPC_16 RPCM_ N21B4B_B_RPC_16 “N2 SFCA MTL FLOW CONTROL VALVE PWR” 1. CMD: RPC POSITION – CLOSE PUI: LAPR96IM2110K GMT _____:_____:_____ (HR:MIN:SEC) 2. VERIFY: RPC POSITION – CL PUI: N2PN22FC1031J	
			MTL CTB TWMV RPC	
109-049	KTCN	MS1	PCS NODE 2: TCS: MTL TWMV: RPCM_N21B4A_A_RPC_02 RPCM_ N21B4A_A_RPC_02 “LOAD: N2 THREE WAY MIX VALVE PWR” 1. CMD: RPC POSITION – CLOSE PUI: LAPR96IM2077K GMT _____:_____:_____ (HR:MIN:SEC) 2. VERIFY: RPC POSITION – CL PUI: N2PN29FC1017J	

RELEASED - Printed documents may be obsolete; validate prior to use.

SECTION IV - OPERATION INSTRUCTIONS

SEQ/STEP	CMD	RESP	DESCRIPTION	VERIF.
			MTL PPA RPC	
109-050	KTCN	MS1	PCS NODE 2: TCS: MTL PPA: RPCM_N21B4A_A_RPC_17	
			RPCM_ N21B4A_A_RPC_17	
			"LOAD: N2 PPA MTL PWR"	
			1. CMD: RPC POSITION - CLOSE PUI: LAPR96IM2092K	
			GMT _____:_____:_____ (HR:MIN:SEC)	
			2. VERIFY: RPC POSITION – CL PUI: N2PN29FC1032J	
			ENABLE COMMUNICATION BETWEEN PRIMARY INTSYS AND N2-1 PPA	
109-051	KCDH	MS1	ENABLE I/O TO THE MTL PPA	
			PCS: HOME / C&DH ICON / PRIMARY INT MDM / LB SYS N2 1 / RT STATUS	
			'RT STATUS'	
			1. **CMD** 9 PPA N2-1 ENABLE **EXECUTE**	LADD96IM0808K
			2. VERIFY 9 PPA N2-1 - ENA	LADP08MDC354J
109-052	KCDH	MS1	ENABLE FDIR FOR THE MTL PPA	
			PCS: HOME / C&DH ICON / PRIMARY INT MDM / LB SYS N2 1 / RT STATUS	
			'RT FDIR STATUS'	
			1. **CMD** 9 PPA N2-1 ENABLE FDIR **EXECUTE**	LADD96IM0630K
			2. VERIFY 9 PPA N2-1 RT FDIR STATUS-ENA	LADP08MDC325J
			'RT COMM FAILED STATUS'	
			3. VERIFY 9 PPA N2-1 RT COMM FAILED STATUS - <BLANK>	LADP08MDC383J

RELEASED - Printed documents may be obsolete; validate prior to use.

SECTION IV - OPERATION INSTRUCTIONS

SEQ/STEP	CMD	RESP	DESCRIPTION	VERIF.
109-053	KTCN	MS1	PCS NODE 2: TCS:MTL SOFTWARE NODE2 MTL SOFTWARE COMMANDS ‘MTL IATCS’ VERIFY: “LEAK RECOVERY” AUTO SHUTDOWN – ENA PUI: LADP08MDC283J	
109-054	KTCN	MS1	PCS NODE 2: TCS:MTL SOFTWARE NODE2 MTL SOFTWARE COMMANDS ‘MTL IATCS’ VERIFY: “FAILURE RECOVERY” FAIL RCVY – ENA PUI: LADP08MDC244J	
109-055	KTCN	MS1	PCS NODE 2:TCS:MTL SOFTWARE NODE2 MTL SOFTWARE COMMANDS ‘MTL IATCS’ VERIFY: “SFCA OVERPRESSURE RECOVERY” STATUS – ENA PUI: LADP08MDC250J	

RELEASED - Printed documents may be obsolete; validate prior to use.

SECTION IV - OPERATION INSTRUCTIONS

SEQ/STEP	CMD	RESP	DESCRIPTION	VERIF.

NOTE

MT LOOP ACTIVATION IS EXPECTED TO OCCUR WITHIN 75 SECONDS AFTER THE “STARTUP” N2 MT LOP ITCS COMMAND HAS BEEN ISSUED. THE STARTUP PROCESS CAN LAST UP TO 150 SECONDS.

ITCS MTL AUTOMATED ACTIVATION

109-056 KTCN MS1 PCS
NODE 2: TCS:MTL SOFTWARE
NODE2 MTL SOFTWARE COMMANDS

‘MTL IATCS’
VERIFY:

1. IATCS STATUS – IDLE

   PUI: LADP08MDC173J

2. IATCS ACTIVATION – NOT IN PROG
   PUI: LADP08MDC171J

RELEASED - Printed documents may be obsolete; validate prior to use.

SECTION IV - OPERATION INSTRUCTIONS

SEQ/STEP	CMD	RESP	DESCRIPTION	VERIF.

NOTE

THE NEXT STEP ESTABLISHES NODE 2 MTL ACTIVE COOLING

109-057 KTCN MS1

PCS
NODE 2: NODE2:TCS:MTL SOFTWARE
NODE2 MTL SOFTWARE COMMANDS

'MTL IATCS'

1. CMD: "STARTUP" - STARTUP
   PUI: LATX96IM0095K

   GMT _____:_____:_____ (HR:MIN:SEC)

VERIFY:

2. IATCS ACTIVATION – IN PROG
   (IATCS SOFTWARE STATUS WILL INDICATE "NOT IN PROG (0)" AT THE END OF MT LOOP ACTIVATION)
   PUI: LADP08MDC171J

3. IATCS STATUS – OPER
   PUI: LADP08MDC173J

4. NO MT LOOP FAILURE WARNING MESSAGES EXIST ON THE C&W SUMMARY PAGE

~OMRSD A3000MI.100-D (PARTIAL TCS)

109-058 KTCN PTC

OK TO CONTINUE SEQ 107 TO COMPLETE JEM A STRING ACTIVATION.

RELEASED - Printed documents may be obsolete; validate prior to use.

SECTION IV - OPERATION INSTRUCTIONS

SEQ/STEP	CMD	RESP	DESCRIPTION	VERIF.
109-059	KTCN	MS1	PCS NODE 2: TCS:MTL PPA NODE2 MTL PPA COMMANDS 'COMMANDS MTL PPA' VERIFY 1. PUMP SOFTWARE – STARTED PUI: LADP08MDC764J 2. PUMP SPEED PUI: N2TI25FC0003U RECORD PUMP SPEED: _____RPM (13910 +/- 1250 RPM) ~OMRSD A3000MI.100-D (PARTIAL TCS)	
109-060	KTCN	DQCM	RECORD MTL PUMP START TIME IN OMI R01120V1 APPENDIX F. GMT ____:____:____ (DAY:HR:MIN) **CAUTION** TO PREVENT INADVERTENT CLOSURE OF MTL SFCA SOV DUE TO MDM FAILURE, REMOVE POWER FROM THE VALVE. **REMOVE POWER FROM MTL SOV**	
109-061	KTCN	MS1	PCS NODE 2: TCS: MTL SFCA: RPCM_N21B4B_B_RPC_01 'RPCM_N21B4B_B_RPC_01' 'N2 SFCA MTL SHUTOFF VALVE (ZENITH ALCOVE)' 1. CMD: RPC POSITION - OOPEN PUI: LAPR96IM2323K GMT _____:_____:_____(HR:MIN:SEC) 2. VERIFY: RPC POSITION – OP PUI: N2PN22FC1016J	

RELEASED - Printed documents may be obsolete; validate prior to use.

SECTION IV - OPERATION INSTRUCTIONS

SEQ/STEP	CMD	RESP	DESCRIPTION	VERIF.
			CHECK MTL SFCA SOV CONFIGURATION	
109-062	KTCN	MS1	PCS NODE 2: NODE2: TCS: MTL SFCA NODE 2 MTL SFCA COMMANDS “MTL SFCA” VERIFY: SHUTOFF VLV POSN - OPEN PUI: N2DS23MD0105J	
			NOTE DDCU, RPCM, AND MDM BASE PLATE MONITORING CONSTRAINT ENDS WITH ACTIVATION OF THE MTL PUMP.	
109-063	KTCN	KEPS PTC KCDH	DDCU, RPCM, AND MDM BASE PLATE MONITORING CONSTRAINT IS OVER	

RELEASED - Printed documents may be obsolete; validate prior to use.

SECTION IV - OPERATION INSTRUCTIONS

SEQ/STEP	CMD	RESP	DESCRIPTION	VERIF.
			NODE 2 STARBOARD RPCM COMMON CLEAR	
109-064	KEPS	MS1	EXECUTE COMMON CLEAR TO NODE 2 RPCM N21B4A A PCS: HOME / NODE 2 / EPS ICON / RPCM N21B4A A / FIRMWARE	
			1. **CMD** COMMON CLEAR	LAPR96IM2484K
			2. VERIFY POWER ON RESET - <BLANK>	N2PN29FC1005J
			3. VERIFY ORU HEALTH - OK	N2PN29FC1006J
109-065	KEPS	MS1	EXECUTE COMMON CLEAR TO NODE 2 RPCM N21B4A B PCS: HOME / NODE 2 / EPS ICON / RPCM N21B4A B / FIRMWARE	
			1. **CMD** COMMON CLEAR	LAPR96IM0006K
			2. VERIFY POWER ON RESET - <BLANK>	N2PN30FC1005J
			3. VERIFY ORU HEALTH - OK	N2PN30FC1006J
109-066	KEPS	MS1	EXECUTE COMMON CLEAR TO NODE 2 RPCM N21B4A C PCS: HOME / NODE 2 / EPS ICON / RPCM N21B4A C / FIRMWARE	
			1. **CMD** COMMON CLEAR	LAPR96IM0006K
			2. VERIFY POWER ON RESET - <BLANK>	N2PN31FC1005J
			3. VERIFY ORU HEALTH - OK	N2PN31FC1006J
			NODE 2 NADIR RPCM COMMON CLEAR	
109-067	KEPS	MS1	EXECUTE COMMON CLEAR TO NODE 2 RPCM N21B4B A PCS: HOME / NODE 2 / EPS ICON / RPCM N21B4B A / FIRMWARE	
			1. **CMD** COMMON CLEAR	LAPR96IM0006K
			2. VERIFY POWER ON RESET - <BLANK>	N2PN21FC1005J
			3. VERIFY ORU HEALTH - OK	N2PN21FC1006J
109-068	KEPS	MS1	EXECUTE COMMON CLEAR TO NODE 2 RPCM N21B4B B PCS: HOME / NODE 2 / EPS ICON / RPCM N21B4B B / FIRMWARE	
			1. **CMD** COMMON CLEAR	LAPR96IM2485K
			2. VERIFY POWER ON RESET - <BLANK>	N2PN22FC1005J
			3. VERIFY ORU HEALTH - OK	N2PN22FC1006J

RELEASED - Printed documents may be obsolete; validate prior to use.

SECTION IV - OPERATION INSTRUCTIONS

SEQ/STEP	CMD	RESP	DESCRIPTION	VERIF.

NODE 2 IATCS MT LOOP STATUS

109-069 KTCN MS1 PCS
NODE 2: NODE2: TCS: IATCS DETAILS

NODE2 IATCS DETAILS

"MTL"

VERIFY:

1. TWMV SOFTWARE – STARTED
   PUI: N2DS23MD0038J

2. TWMV CLC – ENA
   PUI: N2DS23MD0039J

3. TWMV OUT TEMP: _____DEG C (BD)
   PUI: N2TE73SR0001T

4. SFCA SOFTWARE – STARTED
   PUI: N2DS23MD0093J

5. SFCA MOD VLV CLC – ENA
   PUI: N2DS23MD0092J

6. SFCA SOV POSITION – OPEN
   PUI: N2DS23MD0105J

7. PPA SOFTWARE – STARTED
   PUI: LADP08MDC764J

8. PPA AVG ACCUM QTY, %: _____%
   < 85%
   PUI: N2DS23MD0075Q

9. PPA HR FLOW: _____ KG/HR
   564.72 – 1474.18 KG/HR
   (1245 – 3250 LBS/HR)
   PUI: N2TI06FM0002R

RELEASED - Printed documents may be obsolete; validate prior to use.

SECTION IV - OPERATION INSTRUCTIONS

SEQ/STEP	CMD	RESP	DESCRIPTION	VERIF.
109-070	KTCN	MS1	PCS NODE 2: NODE2: TCS “PPA MTL” VERIFY: 1. PMP IN PRESS, KPA: _____ KPA (124.1 – 193.0 KPA) (18.0 – 28.0 PSIA) PUI: N2TI06SR0101P 2. PMP DP, KPA: _____ KPA (193 TO 255.1 KPA) (28 TO 37 PSID) PUI: N2TI06SR0401P 3. OUT TEMP, DEG C:_____ DEG C (BD) PUI: N2TI06SR0001T 4. PUMP SPEED: _____RPM 13910 +/- 1250 RPM PUI: N2TI25FC0003U 5. FILTER DP, KPA: _____ KPA (6.9 – 55.1 KPA) (1.0 – 8.0 PSID) PUI: N2TI06SR0301P 6. GAS TRAP DP, KPA: _____KPA (13.8 – 55.1 KPA) (2.0 – 8.0 PSID) PUI: N2TI06SR0201P “SFCA MTL” 7. MOD VLV DP, KPA: _____KPA (96.5 - 110.3 KPA) (14.0 – 16.0 PSID) PUI: N2TL03SR0001P **VERIFY CABIN PRESSURE SENSOR**	
109-071	KECL	KFWT	RECORD AMBIENT PRESSURE IN NODE 2 MODULE WITH PORTABLE BAROMETER AND REPORT COMPLETE PRESSURE: _____ PSIA	

T:_____

RELEASED - Printed documents may be obsolete; validate prior to use.

SECTION IV - OPERATION INSTRUCTIONS

SEQ/STEP	CMD	RESP	DESCRIPTION	VERIF.
109-072	KECL	MS1	PCS NODE2:ECLSS NODE 2 ECLSS RECORD: CABIN PRESSURE: _____ PSIA VERIFY: CABIN PRESSURE – AMBIENT +/- 0.35 PSIA ENG: ACS N2S1 N2PS PRESSURE SENSOR PUI: N2EA41SR0001P ~OMRSD A3000MI.100-D (ECLSS CPS) **ACTIVATE ASD1**	
109-073	KECL	MS1	PCS NODE2:ECLSS:SD1:RPCM_N21A4A_C_RPC06 RPCM_N21A4A 'RPCM_N21A4A_C_RPC06' 1. CMD: RPC POSITION - CLOSE OPS: RPCM_N21A4A_C_RPC_06_AIR_SMOKE_DETECTOR_1_ CL PUI: LAPR96IM2043K EXECUTE GMT _____:_____:_____ (HR:MIN:SEC) 2. VERIFY: RPC POSITION - CL ENG: RPCM N2NAD 1A4A_C SW06 VOLTAGE STATUS PUI: N2PN19FC1021J	

RELEASED - Printed documents may be obsolete; validate prior to use.

SECTION IV - OPERATION INSTRUCTIONS

SEQ/STEP	CMD	RESP	DESCRIPTION	VERIF.
109-074	KECL	MS1	PCS NODE2:ECLSS:SD1 NODE 2 SMOKE DETECTOR 1 'MONITORING' 1. CMD: MONITORING - ENABLE OPS: NODE_2_SD_1_MON_ENA PUI: N2DS23SM1001K EXECUTE GMT _____:_____:_____ (HR:MIN:SEC) 2. VERIFY: STATUS - ENABLED ENG: FDS N2S1 MDM SD ASD1 MONITORING FLAG PUI: N2DS23MD0006J ~OMRSD A3000MI.100-D (ECLSS ASD1)	
109-075	TIE PTC 052	PTC DKQM	NODE 2 A STRING RE-ACTIVATION COMPLETE. GMT _____:_____:_____ (DAY:HR:MIN)	

NV:_____

RELEASED - Printed documents may be obsolete; validate prior to use.

SECTION IV - OPERATION INSTRUCTIONS

SEQ/STEP	CMD	RESP	DESCRIPTION	VERIF.

110-000 **EPS A STRING POWER QUALITY AND EME**

110-001 PTC DKQM RECORD THE FOLLOWING INFORMATION:

GMT _____:_____:_____ (DAY:HR:MIN)

NV:_____

NOTE

PRINTOUTS REQUIRED BY THIS SEQUENCE MAYBE PRINTED AT ANY TIME.

TASK I:

110-002 KEPS VERIFY THE FOLLOWING ORU'S ARE ACTIVE:

ELEMENT	ORU'S
NODE2	REQUIRED LOADS ARE AT LEAST 4 OF THE FOLLOWING: N2-1 MDM, MTL PUMP, MTL 3 WAY MIX VALVE, MTL SFCA, NIA MTL VENT VALVE, NIA MTL ISO VALVE
JEM PM	REQUIRED LOADS ARE AT LEAST 3 OF THE FOLLOWING: PDB-I (EPS1), PIB (A1), DIU-I (A1), DIU III (EPS1)

110-003 KEPS DKQM RECORD ANY ADDITIONAL NODE 2 1B/4A OR JEM A STRING ENERGIZED LOADS NOT LISTED ABOVE.

LOAD	RPCM SWITCH
_____	_____
_____	_____
_____	_____

NV:_____

110-004 KEPS DESE VERIFY PRE-OPERATION SUPPORT SETUP PLRPC SETUP IS COMPLETE.

RELEASED - Printed documents may be obsolete; validate prior to use.

SECTION IV - OPERATION INSTRUCTIONS

SEQ/STEP	CMD	RESP	DESCRIPTION	VERIF.

NOTE

PERFORM NEXT STEP IF PLRPC A IS NOT CONFIGURED FOR POWER QUALITY.

110-005 KEPS DESE NODE 2/JEM PMA BOB PLRPC

PREPARE PLRPC A LOGICAL LOAD #1 WITH SINGLE SHOT PULSE MODE OF 26 AMPS AT NODE 2/JEM PMA BOB PER OMI R3008. REPORT COMPLETE.

PRIMARY CURRENT: 0 AMPS
SECONDARY CURRENT: 26 AMPS
PULSE WIDTH: 500 MILLISECONDS
RISE/FALL TIME: 20 MICROSECONDS (A=0)

NOT PERFORMED:_____

EME MEASUREMENTS

110-006 KEPS KEME DKQM PERFORM EME MEASUREMENTS PER TPS EMC-3418 FOR THE NODE2/JEM PM LOAD CONFIGURATION 5

START GMT _____:_____:_____ (DAY:HR:MIN)

COMPLETE GMT _____:_____:_____ (DAY:HR:MIN)

NV:_____

~OMRSD A3000ME.100-G (JEM PM A V RIPPLE CONFIG 5)

STEADY STATE AND NOISE & RIPPLE VOLTAGE

110-007 KEPS SDAS PERFORM POWER QUALITY MEASUREMENTS FOR THE NODE2/JEM PM LOAD CONFIGURATION I. SET THE HIGH SPEED TRANSIENT TO 196,000 SAMPLES PER SECOND, THE PRE-TRIGGER TO 5 MILLISECONDS, AND THE POST-TRIGGER TO 50 MILLISECONDS.

1. DEPRESS MANUAL TRIGGER AND RECORD FILENAME.

   FILENAME:_____

2. PRINT THE DATA FOR NODE 2/JEM PMA BOB.

~OMRSD A3000ME.200-M (JEM PM A S-S V CONFIG 5)

RELEASED - Printed documents may be obsolete; validate prior to use.

SECTION IV - OPERATION INSTRUCTIONS

SEQ/STEP	CMD	RESP	DESCRIPTION	VERIF.
			ON/OFF STEP TRANSIENT	
110-008	KEPS	SQSE SDAS	PREPARE TO CAPTURE TRANSIENT DATA ON THE CURRENT FOR NODE 2/JEM PMA BOB. SET TRIGGER LEVEL 2 AMPS ABOVE THE CURRENT PDAS READING FOR NODE 2/JEM PMA BOB. SET SAMPLE RATE TO 100K PER SECOND.	
110-009	KEPS	DESE	NODE 2/JEM PMA BOB PLRPC ISSUE SINGLE SHOT PULSE ON YOUR MARK WHEN READY. GMT _____:_____:_____ (HR:MIN:SEC)	
110-010	SDAS SQSE	KEPS	CAPTURE COMPLETE. RECORD FILENAME. FILENAME:_____	
110-011	KEPS	SDAS	PRINT DATA AS FOLLOWS: 1. PRINT RISING EDGE DATA FOR MEASUREMENT LOCATION NODE 2/JEM PMA BOB. 2. PRINT FALLING EDGE DATA FOR MEASUREMENT LOCATION NODE 2/JEM PMA BOB. ~OMRSD A3000ME.200-N (JEM PM A TRANS V CONFIG 5)	
110-012	KEPS	PTC	POWER QUALITY AND EME MEASUREMENTS FOR NODE 2/JEM PM LOAD CONFIG 5 (TASK I) ARE COMPLETE. COMPLETE GMT _____:_____:_____ (DAY:HR:MIN)	

RELEASED - Printed documents may be obsolete; validate prior to use.

SECTION IV - OPERATION INSTRUCTIONS

SEQ/STEP	CMD	RESP	DESCRIPTION	VERIF.

TASK II:

110-013 KEPS VERIFY THE FOLLOWING ORU'S ARE ACTIVE:

ELEMENT	**ORU'S**
NODE2	REQUIRED LOADS ARE AT LEAST 4 OF THE FOLLOWING: N2-1 MDM, MTL PUMP, MTL 3 WAY MIX VALVE, MTL SFCA, NIA MTL VENT VALVE, NIA MTL ISO VALVE
JEM PM	REQUIRED LOADS ARE AT LEAST 3 OF THE FOLLOWING: PDB-I (EPS1), PIB (A1), DIU-I (A1), DIU III (EPS1), AND AT LEAST 6 OF THE FOLLOWING: PDB-II (DMS1), JCP A, EDSU, PDB-II (A2), DIU-I (A3), PDB-II (A1), PIB (A2), DIU-I (A2),

110-014 KEPS DKQM RECORD ANY ADDITIONAL NODE 2 1B/4A OR JEM A STRING ENERGIZED LOADS NOT LISTED ABOVE.

LOAD	RPCM SWITCH
_____	_____
_____	_____
_____	_____

NV:_____

110-015 KEPS DESE NODE 2/JEM PMA BOB

VERIFY PLRPC IS CONNECTED TO NODE 2/JEM PMA BOB.

RELEASED - Printed documents may be obsolete; validate prior to use.

SECTION IV - OPERATION INSTRUCTIONS

SEQ/STEP	CMD	RESP	DESCRIPTION	VERIF.

NOTE

PERFORM NEXT STEP IF PLRPC A IS NOT CONFIGURED FOR POWER QUALITY.

110-016 KEPS DESE NODE 2/JEM PMA BOB PLRPC

PREPARE PLRPC A LOGICAL LOAD #1 WITH SINGLE SHOT PULSE MODE OF 26 AMPS AT NODE 2/JEM PMA BOB PER OMI R3008. REPORT COMPLETE.

PRIMARY CURRENT:	0 AMPS
SECONDARY CURRENT:	26 AMPS
PULSE WIDTH:	500 MILLISECONDS
RISE/FALL TIME:	20 MICROSECONDS (A=0)

NOT PERFORMED:_____

EME MEASUREMENTS

110-017 KEPS KEME DKQM PERFORM EME MEASUREMENTS PER TPS EMC-3418 FOR THE NODE2/JEM PM LOAD CONFIGURATION 6

START GMT _____:_____:_____ (DAY:HR:MIN)

COMPLETE GMT _____:_____:_____ (DAY:HR:MIN)

NV:_____

~OMRSD A3000ME.100-H (JEM PM A V RIPPLE CONFIG 6)

STEADY STATE AND NOISE & RIPPLE VOLTAGE

110-018 KEPS SDAS PERFORM POWER QUALITY MEASUREMENTS FOR THE NODE2/JEM PM LOAD CONFIGURATION II. SET THE HIGH SPEED TRANSIENT TO 196,000 SAMPLES PER SECOND, THE PRE-TRIGGER TO 5 MILLISECONDS, AND THE POST-TRIGGER TO 50 MILLISECONDS.

1. DEPRESS MANUAL TRIGGER AND RECORD FILENAME.

   FILENAME:_____

2. PRINT THE DATA FOR NODE 2/JEM PMA BOB.

~OMRSD A3000ME.200-O (JEM PM A S-S V CONFIG 6)

RELEASED - Printed documents may be obsolete; validate prior to use.

SECTION IV - OPERATION INSTRUCTIONS

SEQ/STEP	CMD	RESP	DESCRIPTION	VERIF.
			ON/OFF STEP TRANSIENT	
110-019	KEPS	SQSE SDAS	PREPARE TO CAPTURE TRANSIENT DATA ON THE CURRENT FOR NODE 2/JEM PMA BOB. SET TRIGGER LEVEL 2 AMPS ABOVE THE CURRENT PDAS READING FOR NODE 2/JEM PMA BOB. SET SAMPLE RATE TO 100K PER SECOND.	
110-020	KEPS	DESE	NODE 2/JEM PMA BOB PLRPC ISSUE SINGLE SHOT PULSE ON YOUR MARK WHEN READY. GMT _____:_____:_____ (HR:MIN:SEC)	
110-021	SDAS SQSE	KEPS	CAPTURE COMPLETE. RECORD FILENAME. FILENAME:_____	
110-022	KEPS	SDAS	PRINT DATA AS FOLLOWS: 1. PRINT RISING EDGE DATA FOR MEASUREMENT LOCATION NODE 2/JEM PMA BOB. 2. PRINT FALLING EDGE DATA FOR MEASUREMENT LOCATION NODE 2/JEM PMA BOB. ~OMRSD A3000ME.200-P (JEM PM A TRANS V CONFIG 5)	
110-023	KEPS	PTC	POWER QUALITY AND EME MEASUREMENTS FOR NODE 2/JEM PM LOAD CONFIG 6 (TASK II) ARE COMPLETE. COMPLETE GMT _____:_____:_____ (DAY:HR:MIN)	

RELEASED - Printed documents may be obsolete; validate prior to use.

SECTION IV - OPERATION INSTRUCTIONS

SEQ/STEP	CMD	RESP	DESCRIPTION	VERIF.

TASK III:

110-024 KEPS MS1

PCS
JPM:EPS:PDB WS

“PDB WS RPC DETAILS”

‘PDB WS’

ACTIVATE ATU A (WORKSTATION RACK)

CMD: PDB WS RPC 15 - CLOSE
OPS: JPM_EPS_PDB_A_WS_RPC15_(ATU_A_WS)_CL
PUI: JSPX96IM0623K
EXECUTE

GMT _____:_____:_____ (HR:MIN:SEC)

VERIFY:
PDB WS RPC 15 POSN - CL
ENG: PDB_WS RPC15 POWER STATUS
PUI: JSDC00FCPB0XJ

110-025 KEPS

VERIFY THE FOLLOWING ORU’S ARE ACTIVE:

ELEMENT	ORU’S
NODE2	REQUIRED LOADS ARE AT LEAST 4 OF THE FOLLOWING: N2-1 MDM, MTL PUMP, MTL 3 WAY MIX VALVE, MTL SFCA, NIA MTL VENT VALVE, NIA MTL ISO VALVE
JEM PM	REQUIRED LOADS ARE AT LEAST 3 OF THE FOLLOWING: PDB-I (EPS1), PIB (A1), DIU-I (A1), DIU III (EPS1), AND AT LEAST 6 OF THE FOLLOWING: PDB-II (DMS1), JCP A, EDSU, PDB-II (A2), DIU-I (A3), PDB-II (A1), PIB (A2), DIU-I (A2), AND AT LEAST 5 OF THE FOLLOWING: PDB-II (ECLSS/TCS 1), THC A CABIN FAN, TCA L TAC, TCA L PUMP, THC A THCU , PDB-I (W/S), ATU (WS RACK)

RELEASED - Printed documents may be obsolete; validate prior to use.

SECTION IV - OPERATION INSTRUCTIONS

SEQ/STEP	CMD	RESP	DESCRIPTION	VERIF.
110-026	KEPS	DKQM	RECORD ANY ADDITIONAL NODE 2 1B/4A OR JEM A STRING ENERGIZED LOADS NOT LISTED ABOVE. LOAD RPCM SWITCH _____ _____ _____ _____ _____ _____	NV:_____
110-027	KEPS	DESE	NODE 2/JEM PMA BOB VERIFY PLRPC IS CONNECTED TO NODE 2/JEM PMA BOB.	
			NOTE PERFORM NEXT STEP IF PLRPC B IS NOT CONFIGURED FOR POWER QUALITY.	
110-028	KEPS	DESE	NODE 2/JEM PMA BOB PLRPC PREPARE PLRPC A LOGICAL LOAD #1 WITH SINGLE SHOT PULSE MODE OF 26 AMPS AT NODE 2/JEM PMA BOB PER OMI R3008. REPORT COMPLETE. PRIMARY CURRENT: 0 AMPS SECONDARY CURRENT: 26 AMPS PULSE WIDTH: 500 MILLISECONDS RISE/FALL TIME: 20 MICROSECONDS (A=0)	NOT PERFORMED:_____
			EME MEASUREMENTS	
110-029	KEPS	KEME DKQM	PERFORM EME MEASUREMENTS PER TPS EMC-3418 FOR THE NODE2/JEM PM LOAD CONFIGURATION 7 START GMT _____:_____:_____ (DAY:HR:MIN) COMPLETE GMT _____:_____:_____ (DAY:HR:MIN) ~OMRSD A3000ME.100-I (JEM PM A V RIPPLE CONFIG 7)	NV:_____

RELEASED - Printed documents may be obsolete; validate prior to use.

SECTION IV - OPERATION INSTRUCTIONS

SEQ/STEP	CMD	RESP	DESCRIPTION	VERIF.
			STEADY STATE AND NOISE & RIPPLE VOLTAGE	
110-030	KEPS	SDAS	PERFORM POWER QUALITY MEASUREMENTS FOR THE NODE2/JEM PM LOAD CONFIGURATION III. SET THE HIGH SPEED TRANSIENT TO 196,000 SAMPLES PER SECOND, THE PRE-TRIGGER TO 5 MILLISECONDS, AND THE POST-TRIGGER TO 50 MILLISECONDS. 1. DEPRESS MANUAL TRIGGER AND RECORD FILENAME. FILENAME:_____ 2. PRINT THE DATA FOR NODE 2/JEM PMA BOB. ~OMRSD A3000ME.200-Q (JEM PM A S-S V CONFIG 7)	
			ON/OFF STEP TRANSIENT	
110-031	KEPS	SQSE SDAS	PREPARE TO CAPTURE TRANSIENT DATA ON THE CURRENT FOR NODE 2/JEM PMA BOB. SET TRIGGER LEVEL 2 AMPS ABOVE THE CURRENT PDAS READING FOR NODE 2/JEM PMA BOB. SET SAMPLE RATE TO 100K PER SECOND.	
110-032	KEPS	DESE	NODE 2/JEM PMA BOB PLRPC ISSUE SINGLE SHOT PULSE ON YOUR MARK WHEN READY. GMT _____:_____:_____ (HR:MIN:SEC)	
110-033	SDAS SQSE	KEPS	CAPTURE COMPLETE. RECORD FILENAME. FILENAME:_____	
110-034	KEPS	SDAS	PRINT DATA AS FOLLOWS: 1. PRINT RISING EDGE DATA FOR MEASUREMENT LOCATION NODE 2/JEM PMA BOB. 2. PRINT FALLING EDGE DATA FOR MEASUREMENT LOCATION NODE 2/JEM PMA BOB. ~OMRSD A3000ME.200-R (JEM PM A TRANS V CONFIG 7)	

RELEASED - Printed documents may be obsolete; validate prior to use.

SECTION IV - OPERATION INSTRUCTIONS

SEQ/STEP	CMD	RESP	DESCRIPTION	VERIF.
110-035	KEPS	PTC	POWER QUALITY AND EME MEASUREMENTS FOR NODE 2/JEM PM LOAD CONFIG 7 (TASK III) ARE COMPLETE. COMPLETE GMT _____:_____:_____ (DAY:HR:MIN) **TASK IV:**	
110-036	KEPS	MS1	PCS JPM:EPS:LIGHTS “JEM LIGHTS” 1. CMD:PDB EPS1 RPC 11 - CLOSE OPS: JPM_EPS_PDB_A_EPS1_RPC11_(GLA_A1_OF1)_CL PUI: JSPX96IM0542K GMT _____:_____:_____ (HR:MIN:SEC) 2. VERIFY: PDB EPS1 RPC 11 POSITION – CL ENG: PDB_EPS1 RPC11 POWER STATUS PUI: JSDC00FCP71BJ	
110-037	KEPS	MS1	PCS JPM:EPS:LIGHTS “JEM LIGHTS” 1. CMD: PDB EPS1 RPC 12 - CLOSE OPS: JPM_EPS_PDB_A_EPS1_RPC12_(GLA_A2_OA2)_CL PUI: JSPX96IM0543K GMT _____:_____:_____ (HR:MIN:SEC) 2. VERIFY: PDB EPS1 RPC 12 POSITION - CL ENG: PDB_EPS1 RPC12 POWER STATUS PUI: JSDC00FCP71CJ	

RELEASED - Printed documents may be obsolete; validate prior to use.

SECTION IV - OPERATION INSTRUCTIONS

SEQ/STEP	CMD	RESP	DESCRIPTION	VERIF.
110-038	KEPS	MS1	PCS JPM:EPS:LIGHTS “JEM LIGHTS” 1. CMD: PDB EPS1 RPC 13 - CLOSE OPS: JPM_EPS_PDB_A_EPS1_RPC13_(GLA_A3_OF3)_CL PUI: JSPX96IM0544K GMT _____:_____:_____ (HR:MIN:SEC) 2. VERIFY: PDB EPS1 RPC 13 POSITION - CL ENG: PDB_EPS1 RPC13 POWER STATUS PUI: JSDC00FCP71DJ	
110-039	KEPS	MS1	PCS JPM:EPS:LIGHTS “JEM LIGHTS” 1. CMD: PDB EPS1 RPC 14 - CLOSE OPS: JPM_EPS_PDB_A_EPS1_RPC14_(GLA_A4_OA4)_CL PUI: JSPX96IM0545K GMT _____:_____:_____ (HR:MIN:SEC) 2. VERIFY: PDB EPS1 RPC 14 POSITION - CL ENG: PDB_EPS1 RPC14 POWER STATUS PUI: JSDC00FCP71EJ	
110-040	KEPS	MS1	PCS JPM:EPS:LIGHTS “JEM LIGHTS” 1. CMD: PDB EPS1 RPC 15 - CLOSE OPS: JPM_EPS_PDB_A_EPS1_RPC15_(GLA_A5_OF5)_CL PUI: JSPX96IM0546K GMT _____:_____:_____ (HR:MIN:SEC) 2. VERIFY: PDB EPS1 RPC 15 POSITION - CL ENG: PDB_EPS1 RPC15 POWER STATUS PUI: JSDC00FCP71FJ	

RELEASED - Printed documents may be obsolete; validate prior to use.

SECTION IV - OPERATION INSTRUCTIONS

SEQ/STEP	CMD	RESP	DESCRIPTION	VERIF.
110-041	KEPS	MS1	PCS JPM:EPS:LIGHTS “JEM LIGHTS” 1. CMD: PDB EPS1 RPC 16 - CLOSE OPS: JPM_EPS_PDB_A_EPS1_RPC16_(GLA_A8_OA8)_CL PUI: JSPX96IM0547K GMT _____:_____:_____ (HR:MIN:SEC) 2. VERIFY: PDB EPS1 RPC 16 POSITION - CL ENG: PDB_EPS1 RPC16 POWER STATUS PUI: JSDC00FCP71GJ	
110-042	KEPS	MS1	PCS JPM:EPS:LIGHTS “JEM LIGHTS” 1. CMD: PDB A2 RPC 8 - CLOSE OPS: JPM_EPS_PDB_A2_RPC08_(GLA_A6_OA6)_CL PUI: JSPX96IM0464K GMT _____:_____:_____ (HR:MIN:SEC) 2. VERIFY: PDB A2 RPC 8 POSITION - CL ENG: PDB_A2 RPC8 POWER STATUS PUI: JSDC00FCP20JJ	
110-043	KEPS	MS1	PCS JPM:EPS:LIGHTS “JEM LIGHTS” 1. CMD: PDB A2 RPC 9 - CLOSE OPS: JPM_EPS_PDB_A2_RPC09_(GLA_A7_OF7)_CL PUI: JSPX96IM0465K GMT _____:_____:_____ (HR:MIN:SEC) 2. VERIFY: PDB A2 RPC 9 POSITION - CL ENG: PDB_A2 RPC9 POWER STATUS PUI: JSDC00FCP20KJ	

RELEASED - Printed documents may be obsolete; validate prior to use.

SECTION IV - OPERATION INSTRUCTIONS

SEQ/STEP	CMD	RESP	DESCRIPTION	VERIF.
			NOTE PERFORM NEXT STEP IF GLAS 1B-8B ARE NOT TURNED ON	
110-044	KEPS TLM	TLM MJ1	TURN ON GLAS A1-A8 VIA SRCA (SYSTEM ON/OFF REMOTE CONTROL ASSEMBLY)	
				NOT PERFORMED:_____
110-045	KEPS	MS1	PCS JPM:EPS:PDB WS “PDB WS RPC DETAILS” ‘PDB WS’ ACTIVATE TV MON. 1 (WORKSTATION RACK) CMD: PDB WS RPC 6 - CLOSE OPS: JPM_EPS_PDB_A_WS_RPC6_(WS_MON 1)_CL PUI: JSPX96IM0616K EXECUTE GMT _____:_____:_____ (HR:MIN:SEC) VERIFY: PDB WS RPC 6 POSN - CL ENG: PDB_WS RPC6 POWER STATUS PUI: JSDC00FCPB0OJ	
110-046	KEPS	MS1	PCS JPM:EPS:PDB WS “PDB WS RPC DETAILS” ‘PDB WS’ ACTIVATE TV MON. 2 (WORKSTATION RACK) CMD: PDB WS RPC 5 - CLOSE OPS: JPM_EPS_PDB_A_WS_RPC5_(WS_MON 2)_CL PUI: JSPX96IM0615K EXECUTE GMT _____:_____:_____ (HR:MIN:SEC) VERIFY: PDB WS RPC 5 POSN - CL ENG: PDB_WS RPC5 POWER STATUS PUI: JSDC00FCPB0NJ	

RELEASED - Printed documents may be obsolete; validate prior to use.

SECTION IV - OPERATION INSTRUCTIONS

SEQ/STEP	CMD	RESP	DESCRIPTION	VERIF.
110-047	KEPS	SSFE	CES MATE JPM:EPS:PDB WS “PDB WS RPC DETAILS” ‘PDB WS’ ACTIVATE CCP (WORKSTATION RACK) CMD: PDB WS RPC 12 - CLOSE OPS: JPM_EPS_PDB_A_WS_RPC12_(CCP_A_WS)_CL PUI: JSPX96IM0620K EXECUTE GMT _____:_____:_____ (HR:MIN:SEC) VERIFY: TCMS PDB WS RPC 12 POSN - CL ENG: PDB_WS RPC12 POWER STATUS PUI: JSDC00FCPBOUJ	
110-048	KEPS TLM	TLM MJ1	WORKSTATION RACK 1. POWER ON TVM1 2. VERIFY: LED ILLUMINATED	T:_____
110-049	KEPS TLM	TLM MJ1	WORKSTATION RACK 1. POWER ON TVM2 2. VERIFY: LED ILLUMINATED	T:_____
110-050	KEPS TLM	TLM MJ1	WORKSTATION RACK 1. POWER ON CCP 2. VERIFY: LED ILLUMINATED	T:_____

RELEASED - Printed documents may be obsolete; validate prior to use.

SECTION IV - OPERATION INSTRUCTIONS

SEQ/STEP	CMD	RESP	DESCRIPTION	VERIF.

NOTE

PERFORM NEXT STEP IF VIDEO SYSTEM HAS NOT BEEN ACTIVATED TO SUPPORT POWER QUALITY AND EME.

110-051 KEPS KCTE DKQM PERFORM VIDEO SYSTEM ACTIVATION (CVIU_A, VCU_A, AND CPB_A) PER R0031V1 SEQUENCE 44 FOR POWER QUALITY/EME MEASUREMENTS. REPORT COMPLETION.

START GMT _____:_____:_____ (DAY:HR:MIN)

COMPLETE GMT _____:_____:_____ (DAY:HR:MIN)

NV:_____

NOT PERFORMED:_____

110-052 KEPS VERIFY THE FOLLOWING ORU'S ARE ACTIVE:

ELEMENT	ORU'S
NODE2	REQUIRED LOADS ARE AT LEAST 4 OF THE FOLLOWING: N2-1 MDM, MTL PUMP, MTL 3 WAY MIX VALVE, MTL SFCA, NIA MTL VENT VALVE, NIA MTL ISO VALVE
JEM PM	REQUIRED LOADS ARE AT LEAST 3 OF THE FOLLOWING: PDB-I (EPS1), PIB (A1), DIU-I (A1), DIU III (EPS1), AND AT LEAST 6 OF THE FOLLOWING: PDB-II (DMS1), JCP A, EDSU, PDB-II (A2), DIU-I (A3), PDB-II (A1), PIB (A2), DIU-I (A2), AND AT LEAST 5 OF THE FOLLOWING: PDB-II (ECLSS/TCS 1), THC A CABIN FAN, TCA L TAC, TCA L PUMP, THC A THCU , PDB-I (W/S), ATU (WS RACK)AND AT LEAST 12 OF THE FOLLOWING: GLAS (1A – 8A), IMV FAN (A), VCU (A), TV MONITOR UNIT 1&2 (WS RACK), CPB (A), CVIU A, CCP (WS RACK)

RELEASED - Printed documents may be obsolete; validate prior to use.

SECTION IV - OPERATION INSTRUCTIONS

SEQ/STEP	CMD	RESP	DESCRIPTION	VERIF.
110-053	KEPS	DKQM	RECORD ANY ADDITIONAL NODE 2 1B/4A OR JEM A STRING ENERGIZED LOADS NOT LISTED ABOVE. LOAD RPCM SWITCH _____ _____ _____ _____ _____ _____	NV:_____
110-054	KEPS	DESE	NODE 2/JEM PMA BOB VERIFY PLRPC IS CONNECTED TO NODE 2/JEM PMA BOB.	
			NOTE PERFORM NEXT STEP IF PLRPC B IS NOT CONFIGURED FOR POWER QUALITY.	
110-055	KEPS	DESE	NODE 2/JEM PMA BOB PLRPC PREPARE PLRPC A LOGICAL LOAD #1 WITH SINGLE SHOT PULSE MODE OF 26 AMPS AT NODE 2/JEM PMA BOB PER OMI R3008. REPORT COMPLETE. PRIMARY CURRENT: 0 AMPS SECONDARY CURRENT: 26 AMPS PULSE WIDTH: 500 MILLISECONDS RISE/FALL TIME: 20 MICROSECONDS (A=0)	NOT PERFORMED:_____
			EME MEASUREMENTS	
110-056	KEPS	KEME DKQM	PERFORM EME MEASUREMENTS PER TPS EMC-3418 FOR THE NODE2/JEM PM LOAD CONFIGURATION 8 START GMT _____:_____:_____ (DAY:HR:MIN) COMPLETE GMT _____:_____:_____ (DAY:HR:MIN) ~OMRSD A3000ME.100-J (JEM PM A NOISE CONFIG 8) ~OMRSD A3000ME.100-K (JEM PM A V RIPPLE CONFIG 8)	NV:_____

RELEASED - Printed documents may be obsolete; validate prior to use.

SECTION IV - OPERATION INSTRUCTIONS

SEQ/STEP	CMD	RESP	DESCRIPTION	VERIF.
			STEADY STATE AND NOISE & RIPPLE VOLTAGE	
110-057	KEPS	SDAS	PERFORM POWER QUALITY MEASUREMENTS FOR THE NODE2/JEM PM LOAD CONFIGURATION IV. SET THE HIGH SPEED TRANSIENT TO 196,000 SAMPLES PER SECOND, THE PRE-TRIGGER TO 5 MILLISECONDS, AND THE POST-TRIGGER TO 50 MILLISECONDS. 1. DEPRESS MANUAL TRIGGER AND RECORD FILENAME. FILENAME:_____ 2. PRINT THE DATA FOR NODE 2/JEM PMA BOB. ~OMRSD A3000ME.200-S (JEM PM A S-S V CONFIG 8)	
			ON/OFF STEP TRANSIENT	
110-058	KEPS	SQSE SDAS	PREPARE TO CAPTURE TRANSIENT DATA ON THE CURRENT FOR NODE 2/JEM PMA BOB. SET TRIGGER LEVEL 2 AMPS ABOVE THE CURRENT PDAS READING FOR NODE 2/JEM PMA BOB. SET SAMPLE RATE TO 100K PER SECOND.	
110-059	KEPS	DESE	NODE 2/JEM PMA BOB PLRPC RESET PLRPC AND ISSUE SINGLE SHOT PULSE ON YOUR MARK WHEN READY. GMT _____:_____:_____ (HR:MIN:SEC)	
110-060	SDAS SQSE	KEPS	CAPTURE COMPLETE. RECORD FILENAME. FILENAME:_____	
110-061	KEPS	SDAS	PRINT DATA AS FOLLOWS: 1. PRINT RISING EDGE DATA FOR MEASUREMENT LOCATION NODE 2/JEM PMA BOB. 2. PRINT FALLING EDGE DATA FOR MEASUREMENT LOCATION NODE 2/JEM PMA BOB. ~OMRSD A3000ME.200-T (JEM PM A TRANS V CONFIG 8)	

RELEASED - Printed documents may be obsolete; validate prior to use.

SECTION IV - OPERATION INSTRUCTIONS

SEQ/STEP	CMD	RESP	DESCRIPTION	VERIF.
			IMPEDANCE MEASUREMENTS	
110-062	KEPS	SQSE	VERIFY/CONFIGURE TFAC SETUP AT NODE 2/JEM PMA BOB PER OMI R2513. GMT _____:_____:_____ (DAY:HR:MIN)	
110-063	KEPS	SQSE	RECORD LOAD AND SOURCE IMPEDANCE DATA AT NODE 2/JEM PMA BOB. FILENAME FOR LOAD:_____ FILENAME FOR SOURCE:_____	
110-064	KEPS	SQSE	VERIFY IMPEDANCE DATA FOR NODE 2/JEM PMA BOB PER OMI R2513 CAPTURED. ~OMRSD A3000ME.200-U (JEM PM A S/L Z CONFIG 8)	
110-065	KEPS	PTC	POWER QUALITY AND EME MEASUREMENTS FOR NODE 2/JEM PM LOAD CONFIG 8 (TASK IV) ARE COMPLETE. COMPLETE GMT _____:_____:_____ (DAY:HR:MIN)	

RELEASED - Printed documents may be obsolete; validate prior to use.

SECTION IV - OPERATION INSTRUCTIONS

SEQ/STEP	CMD	RESP	DESCRIPTION	VERIF.
			TASK V:	
			NOTE PERFORM THE FOLLOWING STEPS IF PEHG AND PDH IS REQUIRED TO SUPPORT POWER QUALITY AND EME.	
			NOTE PDH IS ALSO ACTIVATED IN NEXT STEP TO SUPPORT PEHG ACTIVATION. THE PDH COMMUNICATES WITH THE PEHG AND IS REQUIRED TO ALLOW SYSTEM ENGINEER VISIBILITY INTO THE HEALTH OF THE PEHG ORU.	
110-066	KEPS	KCTE DKQM	PERFORM OPERATION SUPPORT SETUP – JEM PDH ACTIVATION OPTION A (PDH A) PER R0031V1 SEQUENCE 34 FOR POWER QUALITY/EME MEASUREMENTS. REPORT COMPLETION START GMT _____:_____:_____ (DAY:HR:MIN) COMPLETE GMT _____:_____:_____ (DAY:HR:MIN)	
				NV:_____
				NOT PERFORMED:_____
			PEHG ACTIVATION	
110-067	KCTE TLM	TLM SLT	SLT JPM: EPS: PDB DMS1: RPC 8 'JPM EPS DMS1 PDB A RPC8 CMD' CMD: RPC CLOSE EXECUTE GMT _____:_____:_____ (HR:MIN:SEC) ENG: POWER_ON PDB_DMS1_RPC8 OPS: JPM_EPS_PDB_A_DMS1_RPC08_(PEHG_A)_CL PUI: JSPX96IM0521K	

RELEASED - Printed documents may be obsolete; validate prior to use.

SECTION IV - OPERATION INSTRUCTIONS

SEQ/STEP	CMD	RESP	DESCRIPTION	VERIF.
110-068	KCTE	TLM	SLT	
	TLM	SLT	JPM: EPS: MAIN: PDB DMS1	
			‘JPM EPS DMS1 PDB A’	
			VERIFY:	
			RPC8 – CLOSED (TO PEHG-JEM)	
			ENG: PDB_DMS1 RPC8 POWER STATUS	
			PUI: JSDC00FCP50JJ	
110-069	KCTE	TLM	SLT	
	TLM	SLT	JPM: C&DH: P/L BUS: BUS3: PEHG: TEMPERATURE STAT	
			‘JPM CDH PEHG TEMP HI CW’	
			CMD:	
			INHIBIT	
			EXECUTE	
			GMT _____:_____:_____ (HR:MIN:SEC)	
			ENG: ENABLE EVENT	
			OPS: JPM_CDH_ACTIVE_JCP_EVENT_DET_ENA_TMPLT	
			PUI: JSDD96IM0227K	
			PARAMETER: 121 (PEHG TEMPERATURE HIGH)	
			VERIFY:	
			EVENT DETECTION -- INHIBIT	
			ENG: EVENT INHIBIT FLAG(PEHG TEMPERATURE HIGH)	
			PUI: JSDC00SWZ39EJ	
110-070	KCTE	TLM	SLT	
	TLM	SLT	JPM: C&DH: P/L BUS: BUS 3: PEHG	
			‘JPM CDH PEHG STAT’	
			VERIFY:	
			1. PDH/PEHG COMM STAT –- GOOD	
			ENG: PL_BUS_3 PEHG COMM ERROR	
			PUI: JSDC00SWKZ00J	
			2. TEMPERATURE STAT – NORMAL	
			ENG: PEHG TEMPERATURE LEVEL STATUS-R	
			PUI: JSDC00FCKZ06J	

RELEASED - Printed documents may be obsolete; validate prior to use.

SECTION IV - OPERATION INSTRUCTIONS

SEQ/STEP	CMD	RESP	DESCRIPTION	VERIF.
110-071	KCTE		TCMS CT-PEHG VERIFY: 1. PEHG-JEM GATEWAY – INHIBITED 2. ALL PEHG-JEM PORT STATUS –- INHIBITED NOT PERFORMED:_____ (PREV. 5 STEPS)	
			NOTE PERFORM THE FOLLOWING NEXT STEP IF HRMS IS NOT ACTIVATED TO SUPPORT POWER QUALITY AND EME.	
110-072	KEPS	KCTE DKQM	PERFORM OPERATION SUPPORT SETUP – HIGH-RATE MULTIPLEXER AND SWITCHER (HRMS) ORU ACTIVATION PER R0031V1 SEQUENCE 47 FOR POWER QUALITY/EME MEASUREMENTS. REPORT COMPLETION START GMT _____:_____:_____ (DAY:HR:MIN) COMPLETE GMT _____:_____:_____ (DAY:HR:MIN) NV:_____ NOT PERFORMED:_____	

RELEASED - Printed documents may be obsolete; validate prior to use.

SECTION IV - OPERATION INSTRUCTIONS

SEQ/STEP	CMD	RESP	DESCRIPTION	VERIF.
110-073	KEPS		VERIFY THE FOLLOWING ORU'S ARE ACTIVE:	

ELEMENT	ORU'S
NODE2	REQUIRED LOADS ARE AT LEAST 4 OF THE FOLLOWING: N2-1 MDM, MTL PUMP, MTL 3 WAY MIX VALVE, MTL SFCA, NIA MTL VENT VALVE, NIA MTL ISO VALVE
JEM PM	REQUIRED LOADS ARE AT LEAST 3 OF THE FOLLOWING: PDB-I (EPS1), PIB (A1), DIU-I (A1), DIU III (EPS1), AND AT LEAST 6 OF THE FOLLOWING: PDB-II (DMS1), JCP A, EDSU, PDB-II (A2), DIU-I (A3), PDB-II (A1), PIB (A2), DIU-I (A2), AND AT LEAST 5 OF THE FOLLOWING: PDB-II (ECLSS/TCS 1), THC A CABIN FAN, TCA L TAC, TCA L PUMP, THC A THCU , PDB-I (W/S), ATU (WS RACK)AND AT LEAST 12 OF THE FOLLOWING: GLAS (1A – 8A), IMV FAN (A), VCU (A), TV MONITOR UNIT 1&2 (WS RACK), CPB (A), CVIU A, CCP (WS RACK) AND AT LEAST ONE OF THE FOLLOWING: HRMS, PEHG

110-074 KEPS DKQM RECORD ANY ADDITIONAL NODE 2 1B/4A OR JEM A STRING ENERGIZED LOADS NOT LISTED ABOVE.

LOAD	RPCM SWITCH
_____	_____
_____	_____
_____	_____

NV:_____

RELEASED - Printed documents may be obsolete; validate prior to use.

SECTION IV - OPERATION INSTRUCTIONS

SEQ/STEP	CMD	RESP	DESCRIPTION	VERIF.
110-075	KEPS	DESE	NODE 2/JEM PMA BOB VERIFY PLRPC IS CONNECTED TO NODE 2/JEM PMA BOB. **NOTE** PERFORM NEXT STEP IF PLRPC A IS NOT CONFIGURED FOR POWER QUALITY.	
110-076	KEPS	DESE	NODE 2/JEM PMA BOB PLRPC PREPARE PLRPC A LOGICAL LOAD #1 WITH SINGLE SHOT PULSE MODE OF 26 AMPS AT NODE 2/JEM PMA BOB PER OMI R3008. REPORT COMPLETE. PRIMARY CURRENT: 0 AMPS SECONDARY CURRENT: 26 AMPS PULSE WIDTH: 500 MILLISECONDS RISE/FALL TIME: 20 MICROSECONDS (A=0) NOT PERFORMED:_____	
			EME MEASUREMENTS	
110-077	KEPS	KEME DKQM	PERFORM EME MEASUREMENTS PER TPS EMC-3418 FOR THE NODE2/JEM PM LOAD CONFIGURATION 9 START GMT _____:_____:_____ (DAY:HR:MIN) COMPLETE GMT _____:_____:_____ (DAY:HR:MIN) NV:_____ ~OMRSD A3000ME.100-L (JEM PM A NOISE CONFIG 9) ~OMRSD A3000ME.100-M (JEM PM A V RIPPLE CONFIG 9)	

RELEASED - Printed documents may be obsolete; validate prior to use.

SECTION IV - OPERATION INSTRUCTIONS

SEQ/STEP	CMD	RESP	DESCRIPTION	VERIF.
			STEADY STATE AND NOISE & RIPPLE VOLTAGE	
110-078	KEPS	SDAS	PERFORM POWER QUALITY MEASUREMENTS FOR THE NODE2/JEM PM LOAD CONFIGURATION V. SET THE HIGH SPEED TRANSIENT TO 196,000 SAMPLES PER SECOND, THE PRE-TRIGGER TO 5 MILLISECONDS, AND THE POST-TRIGGER TO 50 MILLISECONDS. 1. DEPRESS MANUAL TRIGGER AND RECORD FILENAME. FILENAME:_____ 2. PRINT THE DATA FOR NODE 2/JEM PMA BOB. ~OMRSD A3000ME.200-V (JEM PM A S-S V CONFIG 9)	
			ON/OFF STEP TRANSIENT	
110-079	KEPS	SQSE SDAS	PREPARE TO CAPTURE TRANSIENT DATA ON THE CURRENT FOR NODE 2/JEM PMA BOB. SET TRIGGER LEVEL 2 AMPS ABOVE THE CURRENT PDAS READING FOR NODE 2/JEM PMA BOB. SET SAMPLE RATE TO 100K PER SECOND.	
110-080	KEPS	DESE	NODE 2/JEM PMA BOB PLRPC RESET PLRPC AND ISSUE SINGLE SHOT PULSE ON YOUR MARK WHEN READY. GMT _____:_____:_____ (HR:MIN:SEC)	
110-081	SDAS SQSE	KEPS	CAPTURE COMPLETE. RECORD FILENAME. FILENAME:_____	
110-082	KEPS	SDAS	PRINT DATA AS FOLLOWS: 1. PRINT RISING EDGE DATA FOR MEASUREMENT LOCATION NODE 2/JEM PMA BOB. 2. PRINT FALLING EDGE DATA FOR MEASUREMENT LOCATION NODE 2/JEM PMA BOB. ~OMRSD A3000ME.200-W (JEM PM A TRANS V CONFIG 9)	

RELEASED - Printed documents may be obsolete; validate prior to use.

SECTION IV - OPERATION INSTRUCTIONS

SEQ/STEP	CMD	RESP	DESCRIPTION	VERIF.
			IMPEDANCE MEASUREMENTS	
110-083	KEPS	SQSE	VERIFY/CONFIGURE TFAC SETUP AT NODE 2/JEM PMA BOB PER OMI R2513. GMT _____:_____:_____ (DAY:HR:MIN)	
110-084	KEPS	SQSE	RECORD LOAD AND SOURCE IMPEDANCE DATA AT NODE 2/JEM PMA BOB. FILENAME FOR LOAD:_____ FILENAME FOR SOURCE:_____	
110-085	KEPS	SQSE	VERIFY IMPEDANCE DATA FOR NODE 2/JEM PMA BOB PER OMI R2513 CAPTURED. ~OMRSD A3000ME.200-X (JEM PM A S/L Z CONFIG 9)	
110-086	KEPS	PTC	POWER QUALITY AND EME MEASUREMENTS FOR NODE 2/JEM PM LOAD CONFIG 9 (TASK V) ARE COMPLETE. COMPLETE GMT _____:_____:_____ (DAY:HR:MIN)	
			LOADS DEACTIVATION STEPS	
110-087	KEPS	MS1	PCS JPM:EPS:LIGHTS “JEM LIGHTS” 1. CMD: PDB EPS1 RPC 11 - OPEN OPS: JPM_EPS_PDB_A_EPS1_RPC11_(GLA_A1_OF1)_OP PUI: JSPX96IM0554K GMT _____:_____:_____ (HR:MIN:SEC) 2. VERIFY: PDB EPS1 RPC 11 POSITION - OP ENG: PDB_EPS1 RPC11 POWER STATUS PUI: JSDC00FCP71BJ	

RELEASED - Printed documents may be obsolete; validate prior to use.

SECTION IV - OPERATION INSTRUCTIONS

SEQ/STEP	CMD	RESP	DESCRIPTION	VERIF.
110-088	KEPS	MS1	PCS JPM:EPS:LIGHTS “JEM LIGHTS” 1. CMD: PDB EPS1 RPC 12 - OPEN OPS: JPM_EPS_PDB_A_EPS1_RPC12_(GLA_A2_OA2)_OP PUI: JSPX96IM0555K GMT _____:_____:_____ (HR:MIN:SEC) 2. VERIFY: PDB EPS1 RPC 12 POSITION - OP ENG: PDB_EPS1 RPC12 POWER STATUS PUI: JSDC00FCP71CJ	
110-089	KEPS	MS1	PCS JPM:EPS:LIGHTS “JEM LIGHTS” 1. CMD: PDB EPS1 RPC 13 - OPEN OPS: JPM_EPS_PDB_A_EPS1_RPC13_(GLA_A3_OF3)_OP PUI: JSPX96IM0556K GMT _____:_____:_____ (HR:MIN:SEC) 2. VERIFY: PDB EPS1 RPC 13 POSITION - OP ENG: PDB_EPS1 RPC13 POWER STATUS PUI: JSDC00FCP71DJ	
110-090	KEPS	MS1	PCS JPM:EPS:LIGHTS “JEM LIGHTS” 1. CMD: PDB EPS1 RPC 14 - OPEN OPS: JPM_EPS_PDB_A_EPS1_RPC14_(GLA_A4_OA4)_OP PUI: JSPX96IM0557K GMT _____:_____:_____ (HR:MIN:SEC) 2. VERIFY: PDB EPS1 RPC 14 POSITION - OP ENG: PDB_EPS1 RPC14 POWER STATUS PUI: JSDC00FCP71EJ	

RELEASED - Printed documents may be obsolete; validate prior to use.

SECTION IV - OPERATION INSTRUCTIONS

SEQ/STEP	CMD	RESP	DESCRIPTION	VERIF.
110-091	KEPS	MS1	PCS JPM:EPS:LIGHTS “JEM LIGHTS” 1. CMD: PDB EPS1 RPC 15 - OPEN OPS: JPM_EPS_PDB_A_EPS1_RPC15_(GLA_A5_OF5)_OP PUI: JSPX96IM0558K GMT _____:_____:_____ (HR:MIN:SEC) 2. VERIFY: PDB EPS1 RPC 15 POSITION - OP ENG: PDB_EPS1 RPC15 POWER STATUS PUI: JSDC00FCP71FJ	
110-092	KEPS	MS1	PCS JPM:EPS:LIGHTS “JEM LIGHTS” 1. CMD: PDB EPS1 RPC 16 - OPEN OPS: JPM_EPS_PDB_A_EPS1_RPC16_(GLA_A8_OA8)_OP PUI: JSPX96IM0559K GMT _____:_____:_____ (HR:MIN:SEC) 2. VERIFY: PDB EPS1 RPC 16 POSITION - OP ENG: PDB_EPS1 RPC16 POWER STATUS PUI: JSDC00FCP71GJ	
110-093	KEPS	MS1	PCS JPM:EPS:LIGHTS “JEM LIGHTS” 1. CMD: PDB A2 RPC 8 - OPEN OPS: JPM_EPS_PDB_A2_RPC08_(GLA_A6_OA6)_OP PUI: JSPX96IM0473K GMT _____:_____:_____ (HR:MIN:SEC) 2. VERIFY: PDB A2 RPC 8 POSITION - OP ENG: PDB_A2 RPC8 POWER STATUS PUI: JSDC00FCP20JJ	

RELEASED - Printed documents may be obsolete; validate prior to use.

SECTION IV - OPERATION INSTRUCTIONS

SEQ/STEP	CMD	RESP	DESCRIPTION	VERIF.
110-094	KEPS	MS1	PCS JPM:EPS:LIGHTS “JEM LIGHTS” 1. CMD: PDB A2 RPC 9 - OPEN OPS: JPM_EPS_PDB_A2_RPC09_(GLA_A7_OF7)_OP PUI: JSPX96IM0474K GMT _____:_____:_____ (HR:MIN:SEC) 2. VERIFY: PDB A2 RPC 9 POSITION - OP ENG: PDB_A2 RPC9 POWER STATUS PUI: JSDC00FCP20KJ **AUDIO TERMINAL UNIT (ATU) DEACTIVATION**	
110-095	KEPS	SSFE	CES MATE LOAD AND RUN MATE SCRIPT MEIT3 MATE ACT CMDS INDEX: 0X0136 CMD: PDB WS RPC 15 – OPEN PUI: JSPX96IM0633K OPS: JPM EPS PDB A WS RPC15 (ATU A WS) OP (OVRD) EXECUTE GMT _____:_____:_____ (HR:MIN:SEC)	

RELEASED - Printed documents may be obsolete; validate prior to use.

SECTION IV - OPERATION INSTRUCTIONS

SEQ/STEP	CMD	RESP	DESCRIPTION	VERIF.
110-096	KEPS	MS1	TCMS PDB WS:JPM EPS PDB WS VERIFY: PDB WS RPC 15 PWR STATUS – CL ENG: PDB WS RPC15 POWER STATUS PUI: JSDC00FCPB0XJ PCS JPM:EPS:PDB WS ‘PDB WS’ CMD: PDB WS RPC 15 - OPEN OPS: JPM_EPS_PDB_A_WS_RPC15_(ATU_A_WS)_OP_(OVERRIDE) PUI: JSPX96IM0633K EXECUTE GMT _____:_____:_____ (HR:MIN:SEC) VERIFY: PDB WS RPC 15 POSN - CL ENG: PDB_WS RPC15 POWER STATUS PUI: JSDC00FCPB0XJ	
110-097	KEPS TLM	TLM MJ1	WORKSTATION RACK 1. POWER OFF TVM1 2. VERIFY: LED NOT ILLUMINATED	T:_____
110-098	KEPS TLM	TLM MJ1	WORKSTATION RACK 1. POWER OFF TVM2 2. VERIFY: LED NOT ILLUMINATED	T:_____
110-099	KEPS TLM	TLM MJ1	WORKSTATION RACK 1. POWER OFF CCP 2. VERIFY: LED NOT ILLUMINATED	T:_____

RELEASED - Printed documents may be obsolete; validate prior to use.

SECTION IV - OPERATION INSTRUCTIONS

SEQ/STEP	CMD	RESP	DESCRIPTION	VERIF.
110-100	KEPS	MS1	PCS JPM:EPS:PDB WS “PDB WS RPC DETAILS” ‘PDB WS’ DEACTIVATE TV MON. 1 (WORKSTATION RACK) CMD: PDB WS RPC 6 - OPEN OPS: JPM_EPS_PDB_A_WS_RPC6_(WS MON1)_OP PUI: JSPX96IM0626K EXECUTE GMT _____:_____:_____ (HR:MIN:SEC) VERIFY: PDB WS RPC 6 POSN - OP ENG: PDB_WS RPC6 POWER STATUS PUI: JSDC00FCPB0OJ	
110-101	KEPS	MS1	PCS JPM:EPS:PDB WS “PDB WS RPC DETAILS” ‘PDB WS’ DEACTIVATE TV MON. 2 (WORKSTATION RACK) CMD: PDB WS RPC 5 - OPEN OPS: JPM_EPS_PDB_A_WS_RPC5_(WS MON2)_OP PUI: JSPX96IM0625K EXECUTE GMT _____:_____:_____ (HR:MIN:SEC) VERIFY: PDB WS RPC 5 POSN - OP ENG: PDB_WS RPC5 POWER STATUS PUI: JSDC00FCPB0NJ	

RELEASED - Printed documents may be obsolete; validate prior to use.

SECTION IV - OPERATION INSTRUCTIONS

SEQ/STEP	CMD	RESP	DESCRIPTION	VERIF.
110-102	KEPS	MS1	PCS JPM:EPS:PDB WS “PDB WS RPC DETAILS” ‘PDB WS’ DEACTIVATE CCP (WORKSTATION RACK) CMD: PDB WS RPC 12 - OPEN OPS: JPM_EPS_PDB_A_WS_RPC12_(CCP WS)_OP PUI: JSPX96IM0630K EXECUTE GMT _____:_____:_____ (HR:MIN:SEC) VERIFY: PDB WS RPC 12 POSN - OP ENG: PDB_WS RPC12 POWER STATUS PUI: JSDC00FCPB0UJ **PEHG DEACTIVATION** **NOTE** PERFORM THE FOLLOWING STEPS IF PEHG IS NO LONGER REQUIRED FOR TEST AND HAS NOT ALREADY BEEN POWERED DOWN.	
110-103	KCTE TLM	TLM SLT	SLT JPM: C&DH: P/L BUS: BUS3: PEHG ‘JPM CDH PEHG STAT’ VERIFY: 1. PDH/PEHG COMM STAT - GOOD ENG: PL_BUS_3 PEHG COMM ERROR PUI: JSDC00SWKZ00J 2. TEMPERATURE STAT – NORMAL ENG: PEHG TEMPERATURE LEVEL STATUS-R PUI: JSDC00FCKZ06J	

RELEASED - Printed documents may be obsolete; validate prior to use.

SECTION IV - OPERATION INSTRUCTIONS

SEQ/STEP	CMD	RESP	DESCRIPTION	VERIF.
110-104	KCTE	TLM	SLT	
	TLM	SLT	JPM: EPS: MAIN: PDB DMS1: RPC 8	
			'JPM EPS DMS1 PDB A RPC8 CMD'	
			CMD: RPC OPEN EXECUTE	
			GMT _____:_____:_____ (HR:MIN:SEC)	
			ENG: POWER_OFF PDB_DMS1_RPC8 OPS: JPM_EPS_PDB_A_DMS1_RPC08_(PEHG_A)_OP PUI: JSPX96IM0525K	
110-105	KCTE	TLM	SLT	
	TLM	SLT	JPM: EPS: MAIN: PDB DMS1	
			'JPM EPS DMS1 PDB A'	
			VERIFY: RPC8 – OPEN (TO PEHG-JEM) ENG: PDB_DMS1 RPC8 POWER STATUS PUI: JSDC00FCP50JJ	
				NOT PERFORMED:_____ (PREV. 3 STEPS)

NOTE

PERFORM NEXT STEP IF PDH IS NO LONGER REQUIRED FOR TEST AND HAS NOT ALREADY BEEN POWERED DOWN.

110-106	KEPS	KCTE	PERFORM OPERATION SUPPORT SETUP – JEM PDH	
		DKQM	DEACTIVATION OPTION A (PDH A) PER R0031V1	
			SEQUENCE 35 FOR POWER QUALITY/EME	
			MEASUREMENTS. REPORT COMPLETION	
			START GMT _____:_____:_____ (DAY:HR:MIN)	
			COMPLETE GMT _____:_____:_____ (DAY:HR:MIN)	
				NV:_____
				NOT PERFORMED:_____

RELEASED - Printed documents may be obsolete; validate prior to use.

SECTION IV - OPERATION INSTRUCTIONS

SEQ/STEP	CMD	RESP	DESCRIPTION	VERIF.
			NOTE PERFORM NEXT STEP IF VIDEO SYSTEM IS NO LONGER REQUIRED FOR TEST AND HAS NOT ALREADY BEEN POWERED DOWN.	
110-107	KEPS	KCTE DKQM	PERFORM VIDEO SYSTEM DEACTIVATION (CVIU_A, VCU_A, AND CPB_A) PER R0031V1 SEQUENCE 45. REPORT COMPLETION. START GMT _____:_____:_____ (DAY:HR:MIN) COMPLETE GMT _____:_____:_____ (DAY:HR:MIN)	NV:_____ NOT PERFORMED:_____
			NOTE PERFORM THE FOLLOWING NEXT STEP IF HRMS IS NO LONGER REQUIRED FOR TEST AND HAS NOT ALREADY BEEN POWERED DOWN.	
110-108	KEPS	KCTE DKQM	PERFORM OPERATION SUPPORT SETUP – HIGH-RATE MULTIPLEXER AND SWITCHER (HRMS) ORU DEACTIVATION PER R0031V1 SEQUENCE 48. REPORT COMPLETION START GMT _____:_____:_____ (DAY:HR:MIN) COMPLETE GMT _____:_____:_____ (DAY:HR:MIN)	NV:_____ NOT PERFORMED:_____
110-109	TIE PTC 052	PTC DKQM	EPS A STRING POWER QUALITY AND EME COMPLETE. GMT _____:_____:_____ (DAY:HR:MIN)	NV:_____

RELEASED - Printed documents may be obsolete; validate prior to use.

SECTION IV - OPERATION INSTRUCTIONS

SEQ/STEP	CMD	RESP	DESCRIPTION	VERIF.
111-000			**A STRING HEALTH STATUS CHECKS**	
111-001	PTC	DKQM	RECORD THE FOLLOWING INFORMATION:	
			GMT _____:_____:_____ (DAY:HR:MIN)	
				NV:_____
			C&DH INITIAL HEALTH STATUS (STANDBY STRING)	
			DIU_EPS_1 HEALTH CHECK	
111-002	KCDH		TCMS(JPM/ DIU EPS1) RECORD:	
			'DIU_BIT'	
			1. HEALTH SUMM - _____(BD) ENG: EPS_RACK1_DIU HEALTH STATUS SUMMARY PUI: JSDC00FCA100J	
			'DIU DF STATUS'	
			2. AIP - _____(BD) ENG: DIU_EPS1_AIP DF STATUS PUI: JSDC00SWA121J	
			3. AIA -_____(BD) ENG: DIU_EPS1_AIA DF STATUS PUI: JSDC00SWA122J	

RELEASED - Printed documents may be obsolete; validate prior to use.

SECTION IV - OPERATION INSTRUCTIONS

SEQ/STEP	CMD	RESP	DESCRIPTION	VERIF.
			DIU A1 HEALTH CHECK	
111-003	KCDH		TCMS(JPM/ DIU A1) RECORD :	
				'DIU BIT'
			1. HEALTH STATUS SUMM - _____(BD) ENG: DIU_A1 HEALTH STATUS SUMMARY PUI: JSDC00FCD000J	
			'DIU DF STATUS'	
			2. AIP - _____(BD) ENG: DIU_A1_AIP DF STATUS PUI: JSDC00SWD021J	
			3. AIA - _____(BD) ENG: DIU_A1_AIA DF STATUS PUI: JSDC00SWD022J	
			DIU A2 HEALTH CHECK	
111-004	KCDH		TCMS(JPM/ DIU A2) RECORD:	
				'DIU_ BIT'
			1. HEALTH SUMM - _____(BD) ENG: DIU_A2 HEALTH STATUS SUMMARY PUI: JSDC00FCD200J	
			'DIU DF STAT'	
			2. AIP - _____(BD) ENG: DIU_A2_AIP DF STATUS PUI: JSDC00SWD221J	
			3. AIA - _____(BD) ENG: DIU_A2_AIA DF STATUS PUI: JSDC00SWD222J	

RELEASED - Printed documents may be obsolete; validate prior to use.

SECTION IV - OPERATION INSTRUCTIONS

SEQ/STEP	CMD	RESP	DESCRIPTION	VERIF.
			DIU A3 HEALTH CHECKS	
111-005	KCDH		TCMS(JPM/ DIU_A3) RECORD:	
				'DIU_BIT'
			1. HEALTH SUMM - _____(BD) ENG: DIU_A3 HEALTH STATUS SUMMARY PUI: JSDC00FCD400J	
			'DIU DF STATUS'	
			2. AIP – _____(BD) ENG: DIU_A3_AIP DF STATUS PUI: JSDC00SWD421J	
			3. AIA – _____(BD) ENG: DIU_A3_AIA DF STATUS PUI: JSDC00SWD422J	

RELEASED - Printed documents may be obsolete; validate prior to use.

SECTION IV - OPERATION INSTRUCTIONS

SEQ/STEP	CMD	RESP	DESCRIPTION	VERIF.
			STANDBY JCP A ACTIVATION	
111-006	KCDH		TCMS (JPM/SECONDARY JCP INFORMATION VERIFY:	
			‘DF STATUS ’	
			1. STANDBY JCP 1 - CURRENT ENG: STANDBY_JCP1 DF STATUS PUI: JSDC00SWZC01J	
			2. STANDBY JCP 2 - CURRENT ENG: STANDBY_JCP2 DF STATUS PUI: JSDC00SWZC02J	
			3. STANDBY JCP 3 - CURRENT ENG: STANDBY_JCP3 DF STATUS PUI: JSDC00SWZC03J	
			4. STANDBY JCP 4 - CURRENT ENG: STANDBY_JCP4 DF STATUS PUI: JSDC00SWZC04J	
			‘ERROR STATUS’	
			RECORD:	
			5. EDSU_HSS - _____(BD) ENG: STAND_BY_JCP EDSU_HSS PUI: JSDC00SWZC07J	
			6. FATAL ERROR STATUS - _____(BD) ENG: STAND_BY_JCP FATAL ERROR STATUS PUI: JSDC00SWZC1BJ	
			‘ACTIVE JCP’ 7. JCP MODE - _____(BD) ENG: OODT_DATA ACTIVE_JCP MODE PUI: JSDC00SWZ713J	
			8. TIME CALIBRATION - _____(BD) ENG: ACTIVE_JCP TIMER CALIBRATION STATUS PUI: JSDC00SWZ850J	

RELEASED - Printed documents may be obsolete; validate prior to use.

SECTION IV - OPERATION INSTRUCTIONS

SEQ/STEP	CMD	RESP	DESCRIPTION	VERIF.
111-007	KCDH		TCMS (DMON) RECORD: 1. ENG: OODT_DATA ACTIVE_JCP PROGRAM VERSION:_____(BD) PUI: JSDC00SWZ714J 2. ENG: OODT_DATA ACTIVE_JCP LM PHYSICAL VERSION:_____(BD) PUI: JSDC00SWZ715U	
111-008	KCDH		TCMS (JPM/SECON HEALTH AND STATUS) RECORD: 'MEMORY ERROR' 1. SOFTWARE FATAL ERROR-_____ (BD) ENG: STAND_BY_JCP STARTING OR S/W FATAL ERROR PUI: JSDC00SWZC17J	
111-009	KCDH		PCS (FAS MESSAGE) VERIFY 1. ATTACH HARD COPIES OF PCS FAS LOG FILE. REPORT COMPLETE.	
111-010	TIE PTC 052	PTC DKQM	A STRING HEALTH STATUS CHECKS COMPLETE. GMT _____:_____:_____ (DAY:HR:MIN)	

NV:_____

RELEASED - Printed documents may be obsolete; validate prior to use.

SECTION IV - OPERATION INSTRUCTIONS

SEQ/STEP	CMD	RESP	DESCRIPTION	VERIF.
112-000			**CDH BUS REDUNDANCY, CB-EXT-2 AND CBM CHECKS**	
112-001	PTC	DKQM	RECORD THE FOLLOWING INFORMATION:	
			GMT _____:_____:_____ (DAY:HR:MIN)	
				NV:_____

NOTE

THE MANUAL CHANNEL SWITCH COMMANDS IN THIS SEQUENCE SHOULD EXECUTE ON THE 100 MS PROCESSING FRAME. HOWEVER, IF THE JEMRMS MDP IS OUT OF COMMUNICATION WITH THE C&C MDM FOR LONGER THAN 300 MS, IT WILL SEND AN EMERGENCY STOP (E-STOP) COMMAND. IF THIS OCCURS IN THE FOLLOWING SEQUENCE, IT SHOULD BE DOCUMENTED ON AN IPR. IT ALSO WILL BE NECESSARY TO PERFORM THE MDP E-STOP RECOVERY PROCEDURE.

RELEASED - Printed documents may be obsolete; validate prior to use.

SECTION IV - OPERATION INSTRUCTIONS

SEQ/STEP	CMD	RESP	DESCRIPTION	VERIF.
112-002	TIE 052	DKQM	RECORD THE ACTUAL STATE FOR THE FOLLOWING EQUIPMENT.	

SYSTEM/ORU	REQUIRED STATE	ACTUAL STATE
JCP-B	OPERATIONAL	
MDP	OPERATIONAL/ACTIVE OR STANDBY	
PCS ON CB EXT-2	CONNECTED	
DIU-EPS2	OPERATIONAL	
JEM CBM CPAS	OFF	
PASS-1000 ON CB-EXT-2 CHANNELS A AND B	CONNECTED/ON	

NV:_____

RELEASED - Printed documents may be obsolete; validate prior to use.

SECTION IV - OPERATION INSTRUCTIONS

SEQ/STEP	CMD	RESP	DESCRIPTION	VERIF.

NOTE

PERFORM THE FOLLOWING STEP TO CONFIGURE FOR SYSTEM TESTING IF REQUIRED.

112-003 TIE DKQM

SEQUENCE TITLE	PROCEDURE	SEQUENCE #	START GMT	STOP GMT

NV:_____

NOT PERFORMED:_____

RELEASED - Printed documents may be obsolete; validate prior to use.

SECTION IV - OPERATION INSTRUCTIONS

SEQ/STEP	CMD	RESP	DESCRIPTION	VERIF.
			NOTE PERFORM THE FOLLOWING STEP IF IT IS NECESSARY TO CONNECT THE USOS SYSTEM PCS (DATA AND POWER CABLE) IN THE JEM MODULE ON UOP_B2_AD5. OTHERWISE, TAKE A 'NOT PERFORMED'	
112-004	KCDH	MS1 DKQM	PERFORM OMI R2009 OPERATION INSTRUCTION SEQUENCE 01, CONNECT USOS PCS LAPTOP TO JEM UTILITY OUTLET PANEL. REPORT COMPLETE. START GMT _____:_____:_____ (DAY:HR:MIN) COMPLETE GMT _____:_____:_____ (DAY:HR:MIN)	NV:_____ NOT PERFORMED:_____
			NOTE PERFORM THE FOLLOWING STEP IF IT IS NECESSARY TO POWER ON THE JEM UOP_B2_AD5 UOP. OTHERWISE TAKE A 'NOT PERFORMED'.	
112-005	KCDH	MS1 DKQM	PERFORM OMI R2009 OPERATION INSTRUCTION SEQUENCE 03, JEM UOP PANEL ACTIVATION (OPTION B FOR UOP_B2_AD5). REPORT COMPLETE. START GMT _____:_____:_____ (DAY:HR:MIN) COMPLETE GMT _____:_____:_____ (DAY:HR:MIN)	NV:_____ NOT PERFORMED:_____

RELEASED - Printed documents may be obsolete; validate prior to use.

SECTION IV - OPERATION INSTRUCTIONS

SEQ/STEP	CMD	RESP	DESCRIPTION	VERIF.
			NOTE PERFORM THE FOLLOWING STEP IF IT IS NECESSARY TO ACTIVATE THE USOS SYSTEM PCS.	
112-006	KCDH	MS1 DKQM	PERFORM OMI R2009 OPERATION INSTRUCTION SEQUENCE 08, FLIGHT PCS ACTIVATION. REPORT COMPLETE. START GMT _____:_____:_____ (DAY:HR:MIN) COMPLETE GMT _____:_____:_____ (DAY:HR:MIN)	NV:_____ NOT PERFORMED:_____
112-007	KCDH	MS1	VERIFY THAT THE USOS SYSTEM PCS INSIDE JEM MODULE CONNECTED TO UOP B2_AD5 IS POWERED AND OPERATIONAL.	
112-008	KCDH	MS1	PCS JPM:CDH:CB-EXT-2:BUS STATUS ‘CB-EXT-2 BUS STATUS RECORD ACTIVE CHANNEL: _____ PUI: LADP01MDAW9ZJ	

RELEASED - Printed documents may be obsolete; validate prior to use.

SECTION IV - OPERATION INSTRUCTIONS

SEQ/STEP	CMD	RESP	DESCRIPTION	VERIF.

NOTE

IF CHANNEL 'A' IS NOT THE ACTIVE CHANNEL ON CB-EXT-2 BUS, PERFORM THE FOLLOWING STEP. OTHERWISE, TAKE A 'NOT PERFORMED'.

112-009 KCDH MS1 PCS
JPM:CDH:CB-EXT-2:BUS STATUS

'CB-EXT-2 BUS STATUS'

1. CMD: SELECT CH A
   PUI: LADD96IM0587K
   EXECUTE

   GMT _____:_____:_____ (HR:MIN:SEC)

2. VERIFY: CHANNEL SELECTED – A
   PUI: LADP01MDAW9ZJ

NOT PERFORMED:_____

112-010 KCDH MS1 PCS
JPM:CDH:CB-EXT-2:BUS STATUS

'CB-EXT-2 BUS STATUS'

1. CMD: AUTO CHANNEL SWITCH STATUS - INHIBIT
   PUI: LADD96IM0586K
   EXECUTE

   GMT _____:_____:_____ (HR:MIN:SEC)

2. VERIFY: AUTO CHANNEL SWITCH STATUS – INH
   PUI: LADP01MDAWA3J

RELEASED - Printed documents may be obsolete; validate prior to use.

SECTION IV - OPERATION INSTRUCTIONS

SEQ/STEP	CMD	RESP	DESCRIPTION	VERIF.
112-011	KCDH	MS1	PCS JPM:CDH:CB-EXT-2:RT STATUS 'CB-EXT-2 RT FDIR STATUS' 1. RECORD THE RT FDIR STATUS (ENA/INH) FOR THE FOLLOWING RTS. RT 15 JEM ZENITH CBM (SEC) _____ PUI: LADP01MDAVV6J RT 16 JEMRMS MDP _____ PUI: LADP01MDAVVFJ RT 18 JEM DIU-EPS2 _____ PUI: LADP01MDAVUXJ RT 19 JCP-B _____ PUI: LADP01MDAVUOJ **NOTE** PERFORM THE FOLLOWING STEP IF IT IS NECESSARY TO 'ENABLE' THE RT FDIR STATUS FOR A JEM RT CURRENTLY 'INHIBITED' IN THE ABOVE STEP.	
112-012	KCDH	MS1	PCS JPM:CDH:CB-EXT-2:RT STATUS 'CB-EXT-2 RT FDIR STATUS' 1. CMD: ENABLE FDIR PUI: LADD96IM0769K EXECUTE 2. VERIFY RT FDIR STATUS - ENA 3. RECORD RT NAME(S) ENABLED IN THIS STEP: _____ GMT _____:_____:_____ (HR:MIN:SEC) NOT PERFORMED:_____	

RELEASED - Printed documents may be obsolete; validate prior to use.

SECTION IV - OPERATION INSTRUCTIONS

SEQ/STEP	CMD	RESP	DESCRIPTION	VERIF.

ACTIVATE JEM CBM SECONDARY CONTROLLERS:

112-013 KCDH MS1 PCS
JPM:JEM S&M:PDB B1

'PDB B1 RPC DETAILS'

1. CMD: RPC5 JPM/JLP CBM CNTLR – CLOSE
   ENG: JPM_EPS_PDB_B1_RPC05
   PUI: JSPX96IM0481K
   EXECUTE

   GMT _____:_____:_____ (HR:MIN:SEC)

2. VERIFY: RPC5 POSN - CL
   ENG: PDB_B1 RPC5 POWER STATUS
   PUI: JSDC00FCP30NJ

NOTE

EACH JEM CPA IS CONNECTED TO A SPECIFIC BUS CHANNEL ON THE CB-EXT-2 BUS. IN THE FOLLOWING TEST PROCEDURE, CPA2 IS CONNECTED TO CHANNEL A AND CPA3 IS CONNECTED TO CHANNEL B. THE C&C MDM WILL AUTOMATICALLY ESTABLISH COMM WITH THE CBM CPA WHEN THE CPA IS ACTIVATED.

112-014 KCDH MS1 PCS
JPM:JEM S&M:PREP FOR MATE
'JEM ZENITH CBM PREP FOR MATE'

1. CMD: ACTIVATE CB-EXT-2 MASTER CONTROLLER (CPA2)
   PUI: LAMC96IM0261K
   EXECUTE

   GMT _____:_____:_____ (HR:MIN:SEC)

RELEASED - Printed documents may be obsolete; validate prior to use.

SECTION IV - OPERATION INSTRUCTIONS

SEQ/STEP	CMD	RESP	DESCRIPTION	VERIF.

NOTE

WAIT A MINIMUM OF 10 SECONDS BEFORE PERFORMING VERIFICATIONS. NUMEROUS COMMAND STATUSES OF 'NO BROADCAST' MAY BE INDICATED ON THE PCS CBM DISPLAY (POWERED BOLT STATUS, AND CAPTURE LATCH STATUS).

112-015 KCDH MS1 JPM:JEM S&M
'JEM ZENITH CBM'

VERIFY:
'CBM STATUS'

1. MODE – ACTIVE
   ENG: CBM MODE
   PUI: LADP01MDD4TTJ

2. MASTER – CB-EXT-2
   ENG: CBM MASTER CONTROLLER STATE
   PUI: LADP01MDD4TRJ

3. COMM ERROR – NO X

4. MASTER CMD STATUS – COMPLETE

5. 485 TIMEOUT – NO X

112-016 KCDH MS1 JPM:JEM S&M:BUILT IN TEST FAILURES

JEM CBM BUILT IN TEST FAILURES – NO X

~OMRSD A3000MS.100-B (CPA2 POWERED/ACTIVATED)

112-017 KCDH MS1 PCS
JPM:CDH:CB-EXT-2:RT STATUS

'CB-EXT-2 RT STATUS'

1. RECORD THE 'RT STATUS' I/O (ENA/INH) FOR THE FOLLOWING RT ADDRESSES AND NAMES

   15 JEM ZENITH CBM (SEC)_____
   PUI: LADP01MDAVV2J
   16 JEMRMS MDP _____
   PUI: LADP01MDAVVBJ
   18 JEM DIU-EPS2 _____
   PUI: LADP01MDAVUTJ
   19 JCP-B _____
   PUI: LADP01MDAVUKJ

RELEASED - Printed documents may be obsolete; validate prior to use.

SECTION IV - OPERATION INSTRUCTIONS

SEQ/STEP	CMD	RESP	DESCRIPTION	VERIF.

NOTE

PERFORM THE FOLLOWING STEP IF IT IS NECESSARY TO 'ENABLE' RT 16 JEMRMS MDP RT STATUS I/O. OTHERWISE TAKE A NOT PERFORMED.

112-018 KCDH MS1 PCS
JPM:CDH:CB-EXT-2:RT STATUS

'CB-EXT-2 RT STATUS'

1. CMD: RT STATUS I/O FOR RT 16 JEMRMS MDP - ENABLE
   PUI: LADD96IM1018K
   EXECUTE

2. VERIFY RT 16 JEMRMS MDP RT STATUS I/O – ENA
   PUI: LADP01MDAVVBJ

   GMT _____:_____:_____ (HR:MIN:SEC)

NOT PERFORMED:_____

NOTE

PERFORM THE FOLLOWING STEP IF IT IS NECESSARY TO 'ENABLE' RT 18 JEM DIU-EPS2 RT STATUS I/O. OTHERWISE TAKE A NOT PERFORMED.

112-019 KCDH MS1 PCS
JPM:CDH:CB-EXT-2:RT STATUS

'CB-EXT-2 RT STATUS'

1. CMD: RT STATUS I/O FOR RT 18 DIU-EPS2 - ENABLE
   PUI: LADD96IM1018K
   EXECUTE

2. VERIFY RT 18 DIU-EPS2 RT STATUS I/O – ENA
   PUI: LADP01MDAVUTJ

   GMT _____:_____:_____ (HR:MIN:SEC)

NOT PERFORMED:_____

RELEASED - Printed documents may be obsolete; validate prior to use.

SECTION IV - OPERATION INSTRUCTIONS

SEQ/STEP	CMD	RESP	DESCRIPTION	VERIF.
			NOTE IN THE FOLLOWING STEP, A 'GOOD POLLING RESPONSE' IS DEFINED AS THE RESPONSE FROM THE REMOTE TERMINAL IS WITHOUT ERROR. THIS IS VERIFIED WITH A PASS-1000, WHICH SHOWS NO ERRORS WITH A GREEN BAR FOR EACH RT. PASS OPERATOR WILL ALSO VERIFY THAT THE PASS-1000 BUS ERROR COUNTER IS NOT INCREMENTING. ANY RED OR YELLOW INDICATIONS SHOULD BE REPORTED TO KCDH.	
			NOTE IN THE FOLLOWING STEP, THE PCS IN THE JEM WILL BE ASSIGNED RT #1, 2, 3, 4 OR 5 BASED ON HOW MANY OTHER PCS ARE ACTIVE ON CB-EXT-1 BUS.	
112-020	KCDH	SCDH	PASS-1000 VERIFY: FOLLOWING RTS WITH I/O ENABLED HAVE A GOOD POLLING RESPONSE (I.E. GREEN BAR) ON THE CB-EXT-2 BUS. RECORD AN X FOR RTS WITH GOOD POLLING RESPONSE, AND N/A FOR RTS WITH I/O INHIBITED. RT 15 JEM ZENITH CBM (SEC) _____ RT 16 JEMRMS MDP _____ RT 18 JEM DIU-EPS2 _____ RT 19 JCP-B _____ RT __ USOS PCS IN JEM _____	
112-021	KCDH	MS1	PCS JPM:CDH:CB-EXT-2:BUS STATUS 'CB-EXT-2 BUS STATUS' 1. RECORD BUS ERROR COUNTER: _____ PUI: LADP01MDAWBTU 2. VERIFY: BUS ERROR COUNTER – NOT INCREMENTING 3. RECORD CHANNEL SWITCH COUNTER: _____ PUI: LADP01MDAW9YU	

RELEASED - Printed documents may be obsolete; validate prior to use.

SECTION IV - OPERATION INSTRUCTIONS

SEQ/STEP	CMD	RESP	DESCRIPTION	VERIF.

NOTE

THE C&C MDM WILL STOP POLLING THE CPA WHEN IT IS DEACTIVATED.

112-022 KCDH MS1 PCS
JPM:JEM S&M:PREP FOR MATE

'JEM ZENITH CBM PREP FOR MATE'

1. CMD: DEACTIVATE
   PUI: LAMC96IM0262K
   EXECUTE

   GMT _____:_____:_____ (HR:MIN:SEC)

2. VERIFY: MODE – INACTIVE
   ENG: CBM MODE
   PUI: LADP01MDD4TTJ

3. VERIFY: MASTER - NONE

112-023 KCDH MS1 PCS
JPM:CDH:CB-EXT-2:BUS STATUS

'CB-EXT-2 BUS STATUS'

1. CMD: SELECT CH B
   PUI: LADD96IM0587K
   EXECUTE

   GMT _____:_____:_____ (HR:MIN:SEC)

2. VERIFY: CHANNEL SELECTED – B
   PUI: LADP01MDAW9ZJ

3. RECORD CHANNEL SWITCH COUNTER: _____
   PUI: LADP01MDAW9YU

4. VERIFY: CHANNEL SWITCH COUNTER INCREMENTED BY ONE

RELEASED - Printed documents may be obsolete; validate prior to use.

SECTION IV - OPERATION INSTRUCTIONS

SEQ/STEP	CMD	RESP	DESCRIPTION	VERIF.
112-024	KCDH	MS1	PCS JPM:JEM S&M:PREP FOR MATE 'JEM ZENITH CBM PREP FOR MATE' 1. CMD: ACTIVATE CB-EXT-2 MASTER CONTROLLER (CPA3) PUI: LAMC96IM0261K EXECUTE GMT _____:_____:_____ (HR:MIN:SEC) **NOTE** WAIT A MINIMUM OF 10 SECONDS BEFORE PERFORMING VERIFICATIONS. NUMEROUS COMMAND STATUSES OF 'NO BROADCAST' MAY BE INDICATED ON THE PCS CBM DISPLAY (POWERED BOLT STATUS, AND CAPTURE LATCH STATUS).	
112-025	KCDH	MS1	JPM:JEM S&M 'JEM ZENITH CBM' VERIFY: 'CBM STATUS' 1. MODE – ACTIVE ENG: CBM MODE PUI: LADP01MDD4TTJ 2. MASTER – CB-EXT-2 ENG: CBM MASTER CONTROLLER STATE PUI: LADP01MDD4TRJ 3. COMM ERROR – NO X 4. MASTER CMD STATUS – COMPLETE 5. 485 TIMEOUT – NO X	
112-026	KCDH	MS1	JPM:JEM S&M:BUILT IN TEST FAILURES JEM CBM BUILT IN TEST FAILURES – NO X ~OMRSD A3000MS.100-B (CPA3 POWERED/ACTIVATED)	

RELEASED - Printed documents may be obsolete; validate prior to use.

SECTION IV - OPERATION INSTRUCTIONS

SEQ/STEP	CMD	RESP	DESCRIPTION	VERIF.
112-027	KCDH	MS1	PCS JPM:CDH:CB-EXT-2:BUS STATUS 'CB-EXT-2 BUS STATUS' 1. RECORD BUS ERROR COUNTER: _____ PUI: LADP01MDAWBTU 2. VERIFY: BUS ERROR COUNTER – NOT INCREMENTING **NOTE** WAIT A MINIMUM OF 3 MINUTES BEFORE PERFORMING THE NEXT STEP.	
112-028	KCDH	SCDH	PASS-1000 1. VERIFY: GOOD POLLING RESPONSE FOR THE FOLLOWING JEM REMOTE TERMINALS WITH I/O ENABLED. (RECORD AN X FOR RTS WITH GOOD POLLING RESPONSE, AND N/A FOR RTS WITH I/O INHIBITED) RT 15 JEM ZENITH CBM (SEC) _____ RT 16 JEMRMS MDP _____ RT 18 JEM DIU-EPS2 _____ RT 19 JCP-B _____ RT __ USOS PCS _____ ~OMRSD A3000MD.100-B (CHANNEL B – GOOD POLLING RESPONSE FROM ACTIVE RTS)	
112-029	KCDH		TCMS(DMON) 'D_M3_EXT_BUS_RT_STATUS' VERIFY: 1. DIU-EPS2 DATA FRAME TIME TAG - INCREMENTING ENG: DIU-III-B STATUS/DISCRETE INPUT DATA FRAME TIME TAG PUI: JMDC04FC0011W 2. JCP-B FRAME COUNT – INCREMENTING ENG: FRAME COUNTER PUI: JSDC00SWZ999U 3. JEMRMS MDP FRAME COUNT – INCREMENTING ENG: FRAME COUNTER PUI: JRRC00SWMZ06U	

RELEASED - Printed documents may be obsolete; validate prior to use.

SECTION IV - OPERATION INSTRUCTIONS

SEQ/STEP	CMD	RESP	DESCRIPTION	VERIF.
112-030	KCDH	MS1	PCS JPM:CDH:CB-EXT-2:BUS STATUS 1. RECORD BUS ERROR COUNTER: _____ PUI: LADP01MDAWBTU 2. VERIFY BUS ERROR COUNTER NOT INCREMENTING 3. RECORD CHANNEL SWITCH COUNTER: _____ PUI: LADP01MDAW9YU 4. VERIFY CHANNEL SWITCH COUNTER HAS NOT INCREMENTED. ~OMRSD A3000MD.100-B (CHANNEL B - BUS SWITCHOVER OCCURRED WITHOUT BUS DROPOUTS) NOTE THE C&C MDM WILL STOP POLLING THE CPA WHEN IT IS DEACTIVATED.	
112-031	KCDH	MS1	PCS JPM:JEM S&M:PREP FOR MATE 'JEM ZENITH CBM PREP FOR MATE' 1. CMD: DEACTIVATE (CPA3) PUI: LAMC96IM0262K EXECUTE GMT _____:_____:_____ (HR:MIN:SEC) 2. VERIFY: MODE – INACTIVE ENG: CBM MODE PUI: LADP01MDD4TTJ 3. VERIFY: MASTER - NONE	

RELEASED - Printed documents may be obsolete; validate prior to use.

SECTION IV - OPERATION INSTRUCTIONS

SEQ/STEP	CMD	RESP	DESCRIPTION	VERIF.
112-032	KCDH	MS1	PCS JPM:CDH:CB-EXT-2:BUS STATUS 'CB-EXT-2 BUS STATUS' 1. CMD: SELECT CH A PUI: LADD96IM0587K EXECUTE GMT _____:_____:_____ (HR:MIN:SEC) 2. VERIFY: CHANNEL SELECTED – A PUI: LADP01MDAW9ZJ 3. RECORD CHANNEL SWITCH COUNTER: _____ PUI: LADP01MDAW9YU 4. VERIFY CHANNEL SWITCH COUNTER INCREMENTED BY ONE	
112-033	KCDH	MS1	PCS JPM:JEM S&M:PREP FOR MATE 'JEM ZENITH CBM PREP FOR MATE' CMD: ACTIVATE CB-EXT-2 MASTER CONTROLLER (CPA2) PUI: LAMC96IM0261K EXECUTE GMT _____:_____:_____ (HR:MIN:SEC)	

RELEASED - Printed documents may be obsolete; validate prior to use.

SECTION IV - OPERATION INSTRUCTIONS

SEQ/STEP	CMD	RESP	DESCRIPTION	VERIF.

NOTE

WAIT A MINIMUM OF 10 SECONDS BEFORE PERFORMING VERIFICATIONS. NUMEROUS COMMAND STATUSES OF 'NO BROADCAST' MAY BE INDICATED ON THE PCS CBM DISPLAY (POWERED BOLT STATUS, AND CAPTURE LATCH STATUS).

112-034 KCDH MS1 JPM:JEM S&M
'JEM ZENITH CBM'

VERIFY:
'CBM STATUS'
1. MODE – ACTIVE
ENG: CBM MODE
PUI: LADP01MDD4TTJ

2. MASTER – CB-EXT-2
ENG: CBM MASTER CONTROLLER STATE
PUI: LADP01MDD4TRJ

3. COMM ERROR – NO X

4. MASTER CMD STATUS – COMPLETE

5. 485 TIMEOUT – NO X

6. 485 CHANNEL - A

~OMRSD A3000MS.110-A (RS485 A)

112-035 KCDH MS1 JPM:JEM S&M:BUILT IN TEST FAILURES

JEM CBM BUILT IN TEST FAILURES – NO X

112-036 KCDH MS1 PCS
JPM:CDH:CB-EXT-2:BUS STATUS

'CB-EXT-2 BUS STATUS'

1. RECORD BUS ERROR COUNTER: _____
PUI: LADP01MDAWBTU

2. VERIFY BUS ERROR COUNTER NOT INCREMENTING

RELEASED - Printed documents may be obsolete; validate prior to use.

SECTION IV - OPERATION INSTRUCTIONS

SEQ/STEP	CMD	RESP	DESCRIPTION	VERIF.

NOTE

WAIT A MINIMUM OF THREE MINUTES BEFORE PROCEEDING WITH THE FOLLOWING STEP.

112-037 KCDH SCDH PASS-1000

VERIFY: GOOD POLLING RESPONSE FOR THE FOLLOWING JEM REMOTE TERMINALS WITH I/O ENABLED. (RECORD AN X FOR RTS WITH GOOD POLLING RESPONSE, AND N/A FOR RTS WITH I/O INHIBITED)

RT 15 JEM ZENITH CBM (SEC) _____
RT 16 JEMRMS MDP _____
RT 18 JEM DIU-EPS2 _____
RT 19 JCP-B _____
RT __ USOS PCS IN JEM _____

~OMRSD A3000MD.100-B (CHANNEL A – GOOD POLLING RESPONSE FROM ACTIVE RTS)

112-038 KCDH TCMS(DMON)
'D_M3_EXT_BUS_RT_STATUS'
VERIFY:

1. DIU-EPS2 DATA FRAME TIME TAG - INCREMENTING
   ENG: DIU-III-B STATUS/DISCRETE INPUT DATA FRAME TIME TAG
   PUI: JMDC04FC0011W

2. JCP-B FRAME COUNT – INCREMENTING
   ENG: FRAME COUNTER
   PUI: JSDC00SWZ999U

3. JEMRMS MDP FRAME COUNT – INCREMENTING
   ENG: FRAME COUNTER
   PUI: JRRC00SWMZ06U

RELEASED - Printed documents may be obsolete; validate prior to use.

SECTION IV - OPERATION INSTRUCTIONS

SEQ/STEP	CMD	RESP	DESCRIPTION	VERIF.
112-039	KCDH	MS1	PCS JPM:CDH:CB-EXT-2:BUS STATUS 1. RECORD BUS ERROR COUNTER: _____ PUI: LADP01MDAWBTU 2. VERIFY BUS ERROR COUNTER - NOT INCREMENTING 3. RECORD CHANNEL SWITCH COUNTER: _____ PUI: LADP01MDAW9YU 4. VERIFY CHANNEL SWITCH COUNTER HAS NOT INCREMENTED. ~OMRSD A3000MD.100-B (CHANNEL A – BUS SWITCHOVER OCCURRED WITHOUT BUS DROPOUTS)	
112-040	KCDH	MS1	PCS JPM:CDH:CB-EXT-2:RT STATUS 'CB-EXT-2 RT STATUS' 1. CMD: RT STATUS I/O FOR RT 18 JEM DIU-EPS2 - INHIBIT PUI: LADD96IM1019K EXECUTE GMT _____:_____:_____ (HR:MIN:SEC) 2. VERIFY: RT 18 JEM DIU-EPS2 RT STATUS I/O – INH PUI: LADP01MDAVUTJ	

RELEASED - Printed documents may be obsolete; validate prior to use.

SECTION IV - OPERATION INSTRUCTIONS

SEQ/STEP	CMD	RESP	DESCRIPTION	VERIF.
112-041	KCDH	MS1	PCS JPM:CDH:CB-EXT-2:BUS STATUS 'CB-EXT-2 BUS STATUS' 1. CMD: AUTO CHANNEL SWITCH STATUS – ENABLE PUI: LADD96IM0586K EXECUTE GMT _____:_____:_____ (HR:MIN:SEC) 2. VERIFY: AUTO CHANNEL SWITCH STATUS – ENA PUI: LADP01MDAWA3J **CBM BBOLT COMMANDING** **NOTE** NUMEROUS (UP TO 20) CMD STATUSES OF "NO BROADCAST" MAY BE INDICATED AFTER INITIAL SET ALL POSITIONS TO ZERO 485 CHANNEL A. **INTIALIZE CONTROLLER POSITIONS ZERO**	
112-042	KCBM	MS1	PCS: HOME:JEM:S&M: JEM ZENITH CBM:PREP FOR MATE 1. COMMAND: SET ALL POSITIONS TO ZERO 485 CH-A PUI: LAMC96IM0308K EXECUTE 2. VERIFY MASTER CMD STATUS COMPLETE 3. VERIFY BOLT CMD STATUS (16)- COMPLETE/NO BROADCAST 4. VERIFY LATCH CMD STATUS (4)- COMPLETE/NO BROADCAST	

RELEASED - Printed documents may be obsolete; validate prior to use.

SECTION IV - OPERATION INSTRUCTIONS

SEQ/STEP	CMD	RESP	DESCRIPTION	VERIF.

NOTE

IF BOLT/LATCH CMD STATUSES DO NOT DISPLAY COMPLETE IN PREVIOUS STEP THEN PERFORM FOLLOWING STEP TO CLEAR “NO BROADCAST”. ACTIVE BIT COMMAND MAY BE SENT UP TO THREE TIMES.

112-043 KCBM MS1 PCS: HOME:JEM:S&M: JEM ZENITH CBM:PREP FOR MATE

1. COMMAND: ACTIVE BIT
   PUI: LAMC96IM0322K

   EXECUTE

   CONFIRMATION REQUEST OVERIDE ACTIVE BIT CMD

2. COMMAND: ACTIVE BIT
   PUI: LAMC96IM0322K

   EXECUTE

NOTE

WAIT 20 SECONDS BEFORE VERIFYING BIT STATUS.

3. VERIFY MASTER CMD STATUS - COMPLETE

4. VERIFY BOLT CMD STATUS (16)- COMPLETE

5. VERIFY BOLT CMD CODE (16)- BUILT_IN_TEST

6. VERIFY LATCH CMD STATUS (4)- COMPLETE

7. VERIFY LATCH CMD CODE (4)- BUILT_IN_TEST

PCS: HOME: JEM: S&M: JEM ZENITH CBM: BUILT IN TEST FAILURES

8. VERIFY CCS CBM ACTIVE BUILT IN TEST FAILURES - ALL BLANK (NO X)

RELEASED - Printed documents may be obsolete; validate prior to use.

SECTION IV - OPERATION INSTRUCTIONS

SEQ/STEP	CMD	RESP	DESCRIPTION	VERIF.
			NOTE IF BOLT OR LATCH CMD STATUS STILL DISPLAY **"NO BROADCAST"** THEN REPERFORM PREVIOUS EIGHT SUBSTEPS. ACTIVE BIT COMMAND MAY BE SENT UP TO **THREE** TIMES.	
			9. RECORD NUMBER OF TIMES BIT CMD SENT:_____	
				NOT PERFORMED:_____
			NOTE BOLT/LATCH POSITIONS MAY NOT DISPLAY ZERO IN FOLLOWING STEP. SET ALL POSITIONS TO ZERO 485 CH_A CMD CAN BE SENT TO SET BOLT/LATCH POSITIONS TO ZERO.	
112-044	KCBM	MS1	PCS: HOME:JEM:S&M: JEM ZENITH CBM	
			1. VERIFY BOLT POSITION (16)- 0.0 REV	
			2. VERIFY LATCH POSITION (4)- 0 DEG	

RELEASED - Printed documents may be obsolete; validate prior to use.

SECTION IV - OPERATION INSTRUCTIONS

SEQ/STEP	CMD	RESP	DESCRIPTION	VERIF.

NOTE

IF BOLT/LATCH POSITIONS DO NOT DISPLAY ZERO IN PREVIOUS STEP THEN PERFORM FOLLOWING STEP TO SET BOLT/LATCH POSITIONS TO ZERO.

112-045 KCBM MS1 PCS: HOME:JEM:S&M: JEM ZENITH CBM: PREP FOR MATE:INITIALIZE CONTROLLER POSITIONS

1. COMMAND: SET ALL POSITIONS TO ZERO 485
   CH A
   PUI: LAMC96IM0308K

   EXECUTE

2. VERIFY MASTER CMD STATUS COMPLETE

3. VERIFY BOLT CMD STATUS (16)- COMPLETE

4. VERIFY BOLT CMD CODE (16)- RELOAD

5. VERIFY BOLT POSITION (16)- 0.0 REV

6. VERIFY LATCH CMD STATUS (4)- COMPLETE

7. VERIFY LATCH CMD CODE (4)- RELOAD

8. VERIFY LATCH POSITION (4)- 0 DEG

NOT PERFORMED:_____

RELEASED - Printed documents may be obsolete; validate prior to use.

SECTION IV - OPERATION INSTRUCTIONS

SEQ/STEP	CMD	RESP	DESCRIPTION	VERIF.

NOTE

EXECUTION TIME IS EXPECTED TO BE LESS THAN 80 SEC.

BOLT CHECKOUT

112-046 KCBM MS1 PCS: HOME: JEM: S&M: JEM ZENITH CBM: PREP FOR MATE

1. COMMAND: BERTHING BOLT CHECKOUT
   PUI: LAMC96IM0331K

   EXECUTE

VERIFY CONFIRMATION REQUEST OVERIDE BERTHING BOLT CHECK CMD

2. COMMAND: YES

   EXECUTE

3. VERIFY CBM MASTER CMD STATUS – COMPLETE

4. VERIFY BOLT CMD STATUS (16)- COMPLETE

5. VERIFY BOLT CMD CODE (16)- BBOLTCK

6. VERIFY BOLT POSITION (16)- 50.0-50.2 REV

~OMRSD A3000MS.120-B (CPA-2)
~OMRSD A3000MS.140-A (BBOLT CMD)
~OMRSD A3000MS.100-B (CPA2 POWERED/ACTIVATED W/BBOLT)

RELEASED - Printed documents may be obsolete; validate prior to use.

SECTION IV - OPERATION INSTRUCTIONS

SEQ/STEP	CMD	RESP	DESCRIPTION	VERIF.
			CBM DEACTIVATION	
112-047	KCDH	MS1	PCS JPM:JEM S&M:PREP FOR MATE 'JEM ZENITH CBM PREP FOR MATE' 1. CMD: DEACTIVATE (CPA2) PUI: LAMC96IM0262K EXECUTE GMT _____:_____:_____ (HR:MIN:SEC) 2. VERIFY: MODE – INACTIVE ENG: CBM MODE PUI: LADP01MDD4TTJ 3. VERIFY: MASTER - NONE	
112-048	KCDH	MS1	PCS JPM:CDH:CB-EXT-2:RT STATUS 'CB-EXT-2 RT STATUS' VERIFY: RT STATUS FOR JEM CBM SEC – INH PUI: LADP01MDAVV2J	
112-049	KCDH	MS1	PCS JPM:JEM S&M 'PDB B1 RPC DETAILS' 1. CMD: RPC 5 JPM/JLP CBM CNTLR – OPEN ENG: JPM_EPS_PDB_B1_RPC05 PUI: JSPX96IM0492K EXECUTE GMT _____:_____:_____ (HR:MIN:SEC) 2. VERIFY: RPC5 POSN - OP ENG: PDB_B1 RPC5 POWER STATUS PUI: JSDC00FCP30NJ	
112-050	TIE PTC 052	PTC DKQM	CDH BUS REDUNDANCY, CB-EXT-2 COMPLETE. GMT _____:_____:_____ (DAY:HR:MIN)	

NV:_____

RELEASED - Printed documents may be obsolete; validate prior to use.

SECTION IV - OPERATION INSTRUCTIONS

SEQ/STEP	CMD	RESP	DESCRIPTION	VERIF.
113-000			**RESERVED**	

RELEASED - Printed documents may be obsolete; validate prior to use.

SECTION IV - OPERATION INSTRUCTIONS

SEQ/STEP	CMD	RESP	DESCRIPTION	VERIF.
114-000			**JEM MODULE DEACTIVATION (JCP-B PRIMARY)**	
			JEM A STRING DEACTIVATION (JCP A STANDBY)	
114-001	PTC	DKQM	RECORD THE FOLLOWING INFORMATION: GMT _____:_____:_____ (DAY:HR:MIN)	
				NV:_____
114-002	KCDH	MS1	PCS JPM:CDH:STANDBY JCP 'STANDBY JCP' VERIFY: STANDBY JCP –COLD_STDBY ENG: STAND_BY_JCP MODE PUI: JSDC00SWZC10J	
			NOTE THE NOT PERFORMED OPTION MAY BE USED IN THE FOLLOWING 4 STEPS IF THE SYSTEMS ARE ALREADY DEACTIVATED	
114-003	PTC	KCTE DKQM	PERFORM AUDIO SYSTEM DEACTIVATION PER R0031V1 SEQUENCE 31. REPORT COMPLETE. START GMT _____:_____:_____ (DAY:HR:MIN) COMPLETE GMT _____:_____:_____ (DAY:HR:MIN)	
				NV:_____
				NOT PERFORMED:_____

RELEASED - Printed documents may be obsolete; validate prior to use.

SECTION IV - OPERATION INSTRUCTIONS

SEQ/STEP	CMD	RESP	DESCRIPTION	VERIF.
114-004	PTC	KCTE DKQM	PERFORM RMS CONSOLE DEACTIVATION PER R0031V1 SEQUENCE 33. REPORT COMPLETE. START GMT _____:_____:_____ (DAY:HR:MIN) COMPLETE GMT _____:_____:_____ (DAY:HR:MIN)	NV:_____ NOT PERFORMED:_____
114-005	PTC	KCTE DKQM	PERFORM VIDEO SYSTEM DEACTIVATION PER R0031V1 SEQUENCE 45. REPORT COMPLETE. START GMT _____:_____:_____ (DAY:HR:MIN) COMPLETE GMT _____:_____:_____ (DAY:HR:MIN)	NV:_____ NOT PERFORMED:_____

NOTE

PERFORM THE FOLLOWING STEP IF THERE ARE ANY UOP'S POWERED OTHER THEN UOP-B2-AD5.

114-006	PTC	KCDH DKQM	PERFORM JEM UOP DEACTIVATIONS PER R2009 SEQUENCE 4. REPORT COMPLETE. RECORD OPTIONS USED: _____ START GMT _____:_____:_____ (DAY:HR:MIN) COMPLETE GMT _____:_____:_____ (DAY:HR:MIN)	NV:_____ NOT PERFORMED:_____

RELEASED - Printed documents may be obsolete; validate prior to use.

SECTION IV - OPERATION INSTRUCTIONS

SEQ/STEP	CMD	RESP	DESCRIPTION	VERIF.
			DEACTIVATE LTL SENSORS	
			DEACTIVATE LTL DP SENSOR A	
114-007	KTCS	MS1	PCS JPM:EPS:PIB A2 PIB A2 SWITCH DETAILS '15V/0.05A' 1. CMD: SW 8 (LTL DP SNSR A) – OPEN ENG: JPM_EPS_PIB_A2_15V_SW08_(LTL_EQUIP_A_DP_SNSR_A)_OP PUI: JSTE96IM0173K GMT _____:_____:_____ (HR:MIN:SEC) 2. VERIFY: SW8 POSN - OP PUI: JSDC00FCPD1VJ	
			DEACTIVATE LTL DP SENSOR B	
114-008	KTCS	SSFE	CES MATE LOAD AND RUN MATE SCRIPT MEIT3_MATE_CMDS INDEX: 0X00C6 CMD: PIB B2 15V SW 6 – OPEN ENG: JPM_EPS_PIB_B2_15V_SW06_(LTL_EQUIP_B_DP_SNSR_B)_OP PUI: JSTE96IM0235K GMT _____:_____:_____ (HR:MIN:SEC)	

RELEASED - Printed documents may be obsolete; validate prior to use.

SECTION IV - OPERATION INSTRUCTIONS

SEQ/STEP	CMD	RESP	DESCRIPTION	VERIF.
114-009	KTCS		TCMS VERIF: PIB_B2 15V SW6 POWER STATUS - OP PUI: JSDC00FCPK1TJ **DEACTIVATE LTL CHX FLOW RATE SENSOR A**	
114-010	KTCS	MS1	PCS JPM:EPS:PIB A1 PIB A1 SWITCH DETAILS '120V/0.5A' 1. CMD: SW39 (LTL THC A CHX FRS) - OPEN ENG: PIB_A1_120V L_SW39_OP_(ECLSS/TCS1_FR_SNSR_A) PUI: JSTE96IM0153K GMT _____:_____:_____ (HR:MIN:SEC) 2. VERIF: SW39 POSN - OP PUI: JSDC00FCPC32J **DEACTIVATE LTL BYPASS FLOWRATE SENSOR A**	
114-011	KTCS	MS1	PCS JPM:EPS:PIB A1 PIB A1 SWITCH DETAILS '120V/0.5A' 1. CMD: SW38 (LTL BYP LINE FRS A) - OPEN ENG: JPM_EPS_PIB_A1_120V_L_SW38_(LTLFWDBYPLINEFRSA)_OP PUI: JSTE96IM0152K GMT _____:_____:_____ (HR:MIN:SEC) 2. VERIF: SW38 POSN - OP ENG: PIB_A1 120V_L SW38 POWER STATUS PUI: JSDC00FCPC31J	

RELEASED - Printed documents may be obsolete; validate prior to use.

SECTION IV - OPERATION INSTRUCTIONS

SEQ/STEP	CMD	RESP	DESCRIPTION	VERIF.
			DEACTIVATE LTL BYPASS FLOWRATE SENSOR B	
114-012	KTCS	SSFE	CES MATE LOAD AND RUN MATE SCRIPT MEIT3_MATE_CMDS INDEX: 0X00CA CMD: PIB B2 120V L SW37 – OP ENG: JPM_EPS_PIB_B2_120V L_SW37_(LTLAFTBYPLINEFRSB)_OP PUI: JSTE96IM0249K GMT _____:_____:_____ (HR:MIN:SEC)	
114-013	KTCS		TCMS VERIFY: PIB_B2 120V L SW37 POWER STATUS – OP ENG: PIB_B2 120V_L SW37 POWER STATUS PUI: JSDC00FCPK30J	
			DEACTIVATE CHX FLOW RATE SENSOR B	
114-014	KTCS	SSFE	CES MATE LOAD AND RUN MATE SCRIPT MEIT3_MATE_CMDS INDEX: 0X00C8 CMD: PIB B2 120V L SW35 – OP ENG: JPM_EPS_PIB_B2_120V L_SW35_(LTL_THCBCHXFRSB)_OP PUI: JSTE96IM0247K GMT _____:_____:_____ (HR:MIN:SEC)	

RELEASED - Printed documents may be obsolete; validate prior to use.

SECTION IV - OPERATION INSTRUCTIONS

SEQ/STEP	CMD	RESP	DESCRIPTION	VERIF.
114-015	KTCS		TCMS VERIFY: PIB_B2 120V L SW35 POWER STATUS – OP ENG: PIB_B2 120V_L SW35 POWER STATUS PUI: JSDC00FCPK2YJ **DEACTIVATE LTL LOOP** **DEACTIVATE LTL TEMP CONTROL**	
114-016	KTCS	SSFE	CES MATE LOAD AND RUN MATE SCRIPT MEIT3_MATE_CMDS INDEX: 0X0110 CMD: TCA L LTL TEMP CNTL – STOP ENG: JPM_ATCS_TCA_L_LTL_TWMV_A_TEMP_CNTL_STOP_(OVRD) PUI: JSTE96IM0335K GMT _____:_____:_____ (HR:MIN:SEC)	
114-017	KTCS		TCMS VERIFY: TCA L LTL TEMP CNTL OPER STAT – STOP OPS: TCA_L LTL TEMP CNTRL EXECUTING STATUS PUI: JSDC00FCTA0KJ	
114-018	KTCS	SSFE	CES MATE LOAD AND RUN MATE SCRIPT MEIT3_MATE_CMDS INDEX: 0X0111 CMD: PIB A1 120V L SW7 (LTL TCV A) - OPEN ENG: JPM_EPS_PIB_A1_120V_L_SW07_(TCA_L_LTL_TWMV_A)_ OP_(OVRD) PUI: JSPC96IM0005K GMT _____:_____:_____ (HR:MIN:SEC)	

RELEASED - Printed documents may be obsolete; validate prior to use.

SECTION IV - OPERATION INSTRUCTIONS

SEQ/STEP	CMD	RESP	DESCRIPTION	VERIF.
114-019	KTCS	MS1	PCS:JPM:TCS:JPM ATCS LTL 'JPM ATCS LTL' 'LTL' 'TCV A' VERIFY: PIB A1 120V L SW7 - OP OPS: PIB_A1 120V_L SW7 POWER STATUS PUI: JSDC00FCPC26J GMT _____:_____:_____ (DAY:HR:MIN) **STOP LTL PUMP**	
114-020	KTCS	SSFE	CES MATE LOAD AND RUN MATE SCRIPT MEIT3_MATE_CMDS INDEX: 0X0112 CMD: PUMP OPERATION – STOP ENG: JPM_ATCS_TCA_L_PUMP_A_STOP_(OVRD) PUI: JSTE96IM0334K GMT _____:_____:_____ (HR:MIN:SEC)	
114-021	KTCS	MS1	PCS:JPM:TCS:JPM ATCS LTL 'JPM ATCS LTL' 'TCA L' 'PUMP' VERIFY: 1. OPERATION – STOP OPS: TCA_L LTL EXECUTING STATUS PUI: JSDC00FCTA0IJ 2. SPEED – DECREASES TO 0 +/- 329 RPM OPS: TCA_L PUMP REV PUI: JSDC00FCTA1WR	

RELEASED - Printed documents may be obsolete; validate prior to use.

SECTION IV - OPERATION INSTRUCTIONS

SEQ/STEP	CMD	RESP	DESCRIPTION	VERIF.
			STOP LTL PRESSURE CONTROL	
114-022	KTCS	SSFE	CES MATE LOAD AND RUN MATE SCRIPT MEIT3_MATE_CMDS INDEX: 0X0113 CMD PRESS CNTL – STOP ENG: JPM_ATCS_TCS_L_PUMP_A_IN_PRESS_CNTL_STOP_(OVRD) PUI: JSTE96IM0337K GMT _____:_____:_____ (HR:MIN:SEC)	
114-023	KTCS	MS1	PCS:JEM:JPM TCS:JPM ATCS LTL 'JPM ATCS LTL' 'TCA L ACCUMULATOR' VERIFY: OPER STAT – STOPPED OPS: TCA_L LTL PRESS CNTRL EXECUTING STATUS PUI: JSDC00FCTA0MJ	
			CLOSE LTL ACCUMULATOR INLET VALVE	
114-024	KTCS	SSFE	CES MATE LOAD AND RUN MATE SCRIPT MEIT3_MATE_CMDS INDEX: 0X0114 CMD INLET VALVE - CL ENG: JPM_ATCS_TCA_L_ACCUM_SOV_A_CL_(OVRD) PUI: JSTE96IM0338K GMT _____:_____:_____ (HR:MIN:SEC)	
114-025	KTCS	MS1	PCS JPM:JPM TCS:JPM ATCS LTL 'JPM ATCS LTL' 'TCA L' 'ACCUMULATOR' VERIFY: INLET VALVE POSN - CLOSED OPS: TCA_L ACCUMULATOR INLET VALVE POSTN PUI: JSDC00FCTA1YJ	

RELEASED - Printed documents may be obsolete; validate prior to use.

SECTION IV - OPERATION INSTRUCTIONS

SEQ/STEP	CMD	RESP	DESCRIPTION	VERIF.
			DEACTIVATE PDB_WS	
114-026	KEPS	MS1	PCS JPM:JEM EPS:PDU A1 'PDU A1 RPC DETAILS' 'PDU A1' 1. CMD: PDU_A1_RPC9(PDB_WS) - OPEN PUI: JSPX96IM0755K OPS: JPM_EPS_PDU_A1_RPC09_(PDB_A_WS)_OP EXECUTE GMT _____:_____:_____ (HR:MIN:SEC) 2. VERIFY: PDU A RPC9 POSN - OP PUI: JSDC00FCPH0OJ ENG: SYS_PDU_A RPC9 POWER STATUS	
			POWER OFF JPM CABIN PRESSURE SENSORS A1, A2	
114-027	KECL	MS1	PCS JPM:JEM:EPS:PIB A1 'PIB A1 SWITCH DETAILS' '15V/0.05A' 1. CMD: SWITCH 8 (JPM CABIN PRESS SNSR A1) - OPEN OPS: JPM_EPS_PIB_A1_15V_SW08_(JPM_CABIN_PRESS_SNSR_A1)_OP PUI: JSPX96IM0646K GMT _____:_____:_____ (HR:MIN:SEC) 2. VERIFY: SWITCH 8 POSN (JPM CABIN PRESS SNSR A1) – OP ENG: PIB_A1 15V SW8 POWER STATUS PUI: JSDC00FCPC1VJ	

RELEASED - Printed documents may be obsolete; validate prior to use.

SECTION IV - OPERATION INSTRUCTIONS

SEQ/STEP	CMD	RESP	DESCRIPTION	VERIF.
114-028	KECL	MS1	PCS JPM:JEM_EPS:PIB A1 'PIB A1 SWITCH DETAILS' '15V/0.05A' 1. CMD: SWITCH 1 (JPM CABIN PRESS SNSR A2) - OPEN OPS: JPM_EPS_PIB_A1_15V_SW01_(JPM_CABIN_PRESS_SNSR_A2)_OP PUI: JSPX96IM0645K GMT _____:_____:_____ (HR:MIN:SEC) 2. VERIFY: SWITCH 1 (JPN CABIN PRESS SNSR A2) POSN – OP ENG: PIB_A1 15V SW1 POWER STATUS PUI: JSDC00FCPC1OJ **POWER OFF JPM IMV SUPPLY FAN** **INHIBIT FDIR JEM IMV-A ROTATION**	
114-029	KECL	SSFE	CES MATE: LOAD AND RUN MATE SCRIPT MEIT3_MATE_CMDS INDEX: 0X0068 OPS: JPM_CDH_ACTIVE_JCP_EVENT_DET_INH_TMPLT PUI: JSDD96IM0228K PARAMETER: 454 (JEM IMV SUPPLY FAN ROTATIONAL RATE OUT OF LIMIT) GMT _____:_____:_____ (HR:MIN:SEC)	
114-030	KECL		TCMS:A-STRING VERIFY: IMV SUPPLY FAN (STBD FWD) ROTATIONAL RATE OUT OF LIMIT EVENT FLAG – INHIBIT ENG: EVENT INHIBIT FLAG(JEM IMV SUPPLY FAN ROTATIONAL RATE OUT OF LIMIT) PUI: JSDC00SWZ38AJ	

RELEASED - Printed documents may be obsolete; validate prior to use.

SECTION IV - OPERATION INSTRUCTIONS

SEQ/STEP	CMD	RESP	DESCRIPTION	VERIF.
			STOP IMV-FAN	
114-031	KECL	MS1	PCS JPM:JEM_ECLSS:IMV_STBD_FWD_FAN JPM IMV FANS 'IMV STBD FWD FAN' 1. CMD: OFF OPS: JPM_ECL_IMV_STBD_FWD_FAN_A_STOP PUI: JSET96IM0005K GMT _____:_____:_____ (HR:MIN:SEC) (RECORD IN APPENDIX G) 2. VERIFY/RECORD: SPEED - _____ RPM (–6580 +/- 340 RPM) ENG: JEM_IMV_SUPPLY_FAN REV PUI: JSDC00FCE120R	
114-032	KECL	MS1	PCS JPM:ECLSS:IMV STBD FWD FAN:PDB EPS1 RPC DETAILS 'PDB EPS1 RPC DETAILS' 'RPC 4' 1. CMD: RPC 4 (JPM IMV STBD FWD FAN A) - OPEN OPS: JPM_EPS_PDB_A_EPS1_RPC04_(JPM_IMV_STBD_FWD_FAN_A)_OP PUI: JSPX96IM0550K GMT _____:_____:_____ (HR:MIN:SEC) 2. VERIFY: RPC 4 (JPM IMV STBD FWD FAN A) POSN - OP ENG: PDB_EPS1 RPC4 POWER STATUS PUI: JSDC00FCP70FJ	

RELEASED - Printed documents may be obsolete; validate prior to use.

SECTION IV - OPERATION INSTRUCTIONS

SEQ/STEP	CMD	RESP	DESCRIPTION	VERIF.
			CLOSE IMV SUPPLY VALVE	
114-033	KECL	MS1	PCS JPM:JEM_EPS:PIB_A1 PIB A1 SWITCH DETAILS '120V/0.5A' 1. CMD: SWITCH 8 (JPM IMV STBD FWD VLV A) - CLOSE OPS: JPM_EPS_PIB_A1_120V_L_SW08_(JPMIMVSTBDFWDV LVA)_CL PUI: JSPX96IM0640K GMT _____:_____:_____ (HR:MIN:SEC) 2. VERIFY: SWITCH 8 POSN (JPM IMV STBD FWD VLV A) - CL ENG: PIB_A1 120V_L SW8 POWER STATUS PUI: JSDC00FCPC27J	

RELEASED - Printed documents may be obsolete; validate prior to use.

SECTION IV - OPERATION INSTRUCTIONS

SEQ/STEP	CMD	RESP	DESCRIPTION	VERIF.
114-034	KECL	MS1	PCS JPM:JEM_ECLSS:IMV_STBD_FWD_VLV JPM IMV VALVES 'IMV STBD FWD VALVE' 1. CMD: POSITION - CLOSED OPS: JPM_ECL_IMV_STBD_FWD_VLV_A_POSN_CL PUI: JSET96IM0006K GMT _____:_____:_____ (HR:MIN:SEC) 2. CMD: VALVE ENABLE - ENABLE OPS: JPM_ECL_IMV_STBD_FWD_VLV_A_ENA PUI: JSET96IM0009K GMT _____:_____:_____ (HR:MIN:SEC) **NOTE** VALVE TRANSITION MAY TAKE APPROXIMATELY 35 SECONDS. VERIFY: 3. VALVE POSITION (STACK) – CLOSE ENG: JEM_IMV_SUPPLY_VALVE STACK POSTN PUI: JSDC00SWE341J 4. SWITCH 8 POSN – OP ENG: PIB_A1 120V_L SW8 POWER STATUS PUI: JSDC00FCPC27J	

RELEASED - Printed documents may be obsolete; validate prior to use.

SECTION IV - OPERATION INSTRUCTIONS

SEQ/STEP	CMD	RESP	DESCRIPTION	VERIF.
			CLOSE CHX A FMV	
114-035	KTCS	MS1	PCS JPM:EPS:PIB A1 PIB A1 SWITCH DETAILS '120V/0.5A' 1. CMD: SWITCH 10 (LTL THC A CHX FCV A) - CLOSE OPS: JPM_EPS_PIB_A1_120V_L_SW10_(LTL_THCACHXFCV A)_CL PUI: JSTE96IM0121K GMT _____:_____:_____ (HR:MIN:SEC) 2. VERIFY: SWITCH 10 POSN - CL ENG: PIB_A1_120V_L_SW10_POWER_STATUS PUI: JSDC00FCPC29J	
114-036	KTCS	MS1	PCS JPM:JEM_TCS:JPM ATCS LTL JPM ATCS LTL 'THC A CHX FCV' 1. CMD: CHX FMV POSITION - -7 DEG OPS: JPM_ATCS_LTL_THC_A_CHX_FCV_A_POSN_SET_TMPL T PARAMETER: -7 PUI: JSTE96IM0276K GMT _____:_____:_____ (HR:MIN:SEC) 2. VERIFY: SWITCH 10 POSN - OP ENG: PIB_A1_120V_L_SW10_POWER_STATUS PUI: JSDC00FCPC29J	

RELEASED - Printed documents may be obsolete; validate prior to use.

SECTION IV - OPERATION INSTRUCTIONS

SEQ/STEP	CMD	RESP	DESCRIPTION	VERIF.

POWER OFF THC-A

NOTE

WHEN THC MODE IS NORMAL, THE THC-A OPS MODE TO STANDBY COMMAND WILL BE REJECTED. THE FOLLOWING COMMAND WILL RESET THE THC MODE SO THC-A OPS MODE CAN BE COMMANDED TO STANDBY.

114-037 KECL SSFE CES MATE
LOAD AND RUN MATE SCRIPT
MEIT3_MATE_CMDS
INDEX: 0X0138

CMD: THC MODE - MANUAL
OPS: JPM_ECL_THC_MODE_SEL_TMPLT (OVRD)
PUI: JSDD96IM0234K (OVERRIDE)

GMT _____:_____:_____ (HR:MIN:SEC)

114-038 KECL MS1 PCS
JPM:ECLSS
JPM ECLSS

'THC MODE'

VERIFY: THC MODE - MANUAL
ENG: THC MODE STATUS
PUI: JSDC00SWZ602J

RELEASED - Printed documents may be obsolete; validate prior to use.

SECTION IV - OPERATION INSTRUCTIONS

SEQ/STEP	CMD	RESP	DESCRIPTION	VERIF.

NOTE

THC-A HEALTH STATUS SUMMARY STACK MAY INDICATE “ERROR” AND THC-A PARTICLE FILTER STATUS STACK AND THC-A WATER SEPARATOR STATUS STACK MAY INDICATE “ABNORMAL” WHEN THE FOLLOWING STEP IS PERFORMED.

114-039 KECL MS1

PCS
JPM:JEM_ECLSS:THC A:THC A COMMANDS
JPM THC A COMMANDS

‘THC A’

1. CMD: OPS MODE - STANDBY
   OPS: JPM_ECL_THC_A_OPS_MODE_STANDBY
   PUI: JSET96IM0022K

   GMT _____:_____:_____ (HR:MIN:SEC) (RECORD IN APPENDIX G)

2. VERIFY: OPS MODE - STANDBY
   ENG: THC_A RUN STATUS
   PUI: JSDC00FCEA0XJ

3. RECORD: FAN SPEED - _____RPM (BD)
   ENG: THC_A CABIN FAN SPEED CURRENT
   PUI: JSDC00FCEA02R

114-040 KECL SSFE

CES MATE
LOAD AND RUN MATE SCRIPT
MEIT3_MATE_CMDS
INDEX: 0X002A

OPS: JPM_CDH_DIU/ORU_(RS422)_COMM_STOP_TMPLT
PUI: JSDD96IM0036K
PARAMETER: DIU_A1(6)
PARAMETER: THCU_A(1)

GMT _____:_____:_____ (HR:MIN:SEC)

RELEASED - Printed documents may be obsolete; validate prior to use.

SECTION IV - OPERATION INSTRUCTIONS

SEQ/STEP	CMD	RESP	DESCRIPTION	VERIF.
114-041	KECL	MS1	PCS JPM:ECLSS:THC A:THC A COMMANDS JPM THC A COMMANDS 'STATUS' VERIFY: DATA FRAME STAT - LAST_VALUE ENG: THC_A DF STATUS PUI: JSDC00SWEA20J	
114-042	KECL	MS1	PCS JPM:ECLSS:THC A:THC A COMMANDS:PDB TCS1 RPC DETAILS PDB TCS1 RPC DETAILS 'RPC 5' 1. CMD: RPC 5 (THCU A) - OPEN OPS: JPM_EPS_PDB_A_TCS1_RPC05_(THCU_A)_OP PUI: JSPX96IM0596K GMT _____:_____:_____ (HR:MIN:SEC) 2. VERIFY: RPC 5 POSN (THCU A) - OP ENG: PDB_TCS1 RPC5 POWER STATUS PUI: JSDC00FCP90GJ	

RELEASED - Printed documents may be obsolete; validate prior to use.

SECTION IV - OPERATION INSTRUCTIONS

SEQ/STEP	CMD	RESP	DESCRIPTION	VERIF.
114-043	KECL	MS1	PCS JPM:ECLSS:THC A:THC A COMMANDS:PDB TCS1 RPC DETAILS PDB TCS1 RPC DETAILS 'RPC1' 1. CMD: RPC 1 (THC A FAN) - OPEN OPS: JPM_EPS_PDB_A_TCS1_RPC01_(THC_A_FAN)_OP PUI: JSPX96IM0593K GMT _____:_____:_____ (HR:MIN:SEC) 2. VERIFY: RPC 1 POSN (THC A FAN) - OP ENG: PDB_TCS1 RPC1 POWER STATUS PUI: JSDC00FCP90CJ **DEACTIVATE JEFHX INLET FRS A**	
114-044	KTCS	MS1	PCS JPM:EPS:PIB A2 PIB A2 SWITCH DETAILS '120V/0.5A' 1. CMD: SW 35 (MTL JEFHX IN FRS A) – OPEN ENG: JPM_EPS_PIB_A2_120V_L_SW35_(MTLJEFHXINFRSA)_OP PUI: JSTE96IM0187K GMT _____:_____:_____ (HR:MIN:SEC) 2. VERIFY: SW35 POSN - OP PUI: JSDC00FCPD2YJ	

RELEASED - Printed documents may be obsolete; validate prior to use.

SECTION IV - OPERATION INSTRUCTIONS

SEQ/STEP	CMD	RESP	DESCRIPTION	VERIF.
114-045	KECL	MS1	PCS JPM:JEM_ECLSS:SD A JPM CABIN SMOKE DETECTOR A 'MONITORING' 1. CMD: INHIBIT OPS: JPM_ECL_FDS_CABIN_SD_A_MONITOR_STOP PUI: JSEF96IM0025K GMT_____:_____:_____ (HR:MIN:SEC) 2. VERIFY: STATUS - INVALID ENG: PM_CABIN_SD_A MONITOR STATUS PUI: JSDC00FCE712J	
114-046	KECL	MS1	PCS JPM:ECLSS:SD A:PIB A1 SWITCH DETAILS PIB A1 SWITCH DETAILS '120V/0.5A' 1. CMD: SWITCH 30 (JPM CABIN SD A) – OP OPS: JPM_EPS_PIB_A1_120V_L_SW30_(JPM_CABIN_SD_A)_OP PUI: JSPX96IM0649K GMT _____:_____:_____ (HR:MIN:SEC) 2. VERIFY: SWITCH 30 (JPM CABIN SD A) POSN - OP ENG: PIB_A1 120V_L SW30 POWER STATUS PUI: JSDC00FCPC2TJ	

RELEASED - Printed documents may be obsolete; validate prior to use.

SECTION IV - OPERATION INSTRUCTIONS

SEQ/STEP	CMD	RESP	DESCRIPTION	VERIF.
			DEACTIVATE MTL DP SENSOR A	
114-047	KTCS	MS1	PCS JPM:EPS:PIB A2 PIB A2 SWITCH DETAILS '15V/0.05A' 1. CMD: SWITCH 9_- OPEN ENG: JPM_EPS_PIB_A2_15V_SW09_(MTL_EQUIP_A_DP_SN SR_A)_OP PUI: JSTE96IM0174K GMT _____:_____:_____ (HR:MIN:SEC) 2. VERIFY: SW9 POSN - OP PUI: JSDC00FCPD1WJ	
			DEACTIVATE JCP A (JCP-A COLD STANDBY)	
114-048	KCDH	MS1	PCS JPM:JEM_EPS:PDB DMS1 'PDB DMS1 RPC DETAILS' CMD: RPC 1 (JCP_A_MPC/BIC) – OPEN OPS: JPM_EPS_PDB_A_DMS1_RPC01_(JCP_A_MPC/BIC) PUI: JSPX96IM0522K GMT _____:_____:_____ (HR:MIN:SEC) VERIFY: RPC POSN 1 JCP (MPC/BIC) - OP ENG: PDB_DMS1 RPC1 POWER STATUS PUI: JSDC00FCP50CJ	
114-049	KCDH	MS1	PCS JPM:JEM_EPS:PDB_DMS1 'PDB DMS1 RPC DETAILS' CMD: PDB_A_DMS1_RPC 7 – (JCP_A_EDSU) - OPEN OPS: JPM_EPS_PDB_A_DMS1_RPC07_(JCP_A_EDSU)_OP PUI: JSPX96IM0524K GMT _____:_____:_____ (HR:MIN:SEC) VERIFY: RPC 7 POSN JCP A (EDSU) - OP ENG: PDB_DMS1 RPC7 POWER STATUS PUI: JSDC00FCP50IJ	

RELEASED - Printed documents may be obsolete; validate prior to use.

SECTION IV - OPERATION INSTRUCTIONS

SEQ/STEP	CMD	RESP	DESCRIPTION	VERIF.
			DEACTIVATE PDB-DMS1	
114-050	KEPS	MS1	PCS JPM:JEM_EPS:PDU A1 'PDU A1 RPC DETAILS' 'PDU A1' 1. CMD: PDU_A1_RPC10(PDB_DMS1)- OPEN PUI: JSPX96IM0756K OPS: JPM_EPS_PDU_A1_RPC10_(PDB_A_DMS1)_OP EXECUTE GMT _____:_____:_____ (HR:MIN:SEC) 2. VERIFY: PDU_A RPC10 POSN – OP PUI: JSDC00FCPH0PJ ENG: SYS_PDU_A RPC10 POWER STATUS	
			POWER OFF PIB_A2	
114-051	KEPS	MS1	PCS JPM:JEM_EPS:PDB A2 'PDB A2 RPC DETAILS' 'PDB A2' 1. CMD: PDB_A2_RPC3(PIB_A2) - OPEN PUI: JSPX96IM0468K OPS: JPM_EPS_PDB_A2_RPC03_(PIB_A2)_OP EXECUTE GMT _____:_____:_____ (HR:MIN:SEC) 2. VERIFY: PDB_A2 RPC3 POSN -OP PUI: JSDC00FCP20EJ ENG: PDB_A2 RPC3 POWER STATUS	

RELEASED - Printed documents may be obsolete; validate prior to use.

SECTION IV - OPERATION INSTRUCTIONS

SEQ/STEP	CMD	RESP	DESCRIPTION	VERIF.
			POWER OFF PDB-A1	
114-052	KEPS	MS1	PCS JPM:JEM_EPS:PDU A1 'PDU A1 RPC DETAILS' 'PDU A1' 1. CMD: PDU A1 RPC12 (PDB A1) - OPEN PUI: JSPX96IM0758K OPS: PDU_A1_RPC12_OP_(PDB_A1) EXECUTE GMT _____:_____:_____ (HR:MIN:SEC) 2. VERIFY: PDU_A RPC12 POSN - OP PUI: JSDC00FCPH0RJ ENG: SYS_PDU_A RPC12 POSN	
			POWER OFF DIU _A1 VDO	
114-053	KCDH	MS1	PCS JPM:JEM_EPS:PDB EPS 1 'PDB EPS 1 RPC DETAILS' 1. CMD: RPC 2 (DIU_A1 VDO) - OPEN OPS : JPM_EPS_PDB_A_EPS1_RPC02_(DIU_A1_VLV)_OP PUI: JSPX96IM0548K EXECUTE GMT _____:_____:_____ (HR:MIN:SEC) 2. VERIFY: RPC 2 POSN (DIU_A1 VDO) – OP ENG: PDB_EPS1 RPC2 POWER STATUS PUI: JSDC00FCP70DJ	

RELEASED - Printed documents may be obsolete; validate prior to use.

SECTION IV - OPERATION INSTRUCTIONS

SEQ/STEP	CMD	RESP	DESCRIPTION	VERIF.
			POWER OFF DIU - A3	
114-054	KCDH	SSFE	CES MATE LOAD AND RUN MATE SCRIPT MEIT3_MATE_CMDS INDEX: 0X011A CMD: JPM_EPS_PDB_A2_RPC05_(DIU_A3_VLV)_OP_(OVRD) PUI: JSPC96IM0000K EXECUTE GMT _____:_____:_____ (HR:MIN:SEC)	
114-055	KCDH		TCMS JPM:DIU A3 'DIU RPC 5' VERIFY: RPC 5 VDO – OP ENG: PDB_A2 RPC5 POWER STATUS PUI: JSDC00FCP20GJ	
114-056	KCDH	MS1	PCS JPM:JEM_EPS:PDB A2 'PDB A2 RPC DETAILS' 1. CMD: RPC 7 (DIU_A3_CNTRL) – OPEN OPS: PDB_A2_RPC7(DIU_A3_CNTL))_OP PUI: JSPX96IM0472K EXECUTE GMT _____:_____:_____ (HR:MIN:SEC) 2. VERIFY: RPC 7 POSN (DIU_A3 CNTRL) – OP ENG: PDB_A2 RPC7 POWER STATUS PUI: JSDC00FCP20IJ	

RELEASED - Printed documents may be obsolete; validate prior to use.

SECTION IV - OPERATION INSTRUCTIONS

SEQ/STEP	CMD	RESP	DESCRIPTION	VERIF.
			POWER OFF DIU – A2	
114-057	KCDH	MS1	PCS JPM:JEM_EPS:PDB A2 'PDB A2 RPC DETAILS' 1. CMD: RPC 2 (DIU_A2 VDO) - OPEN OPS : JPM_EPS_PDB_A2_RPC02_(DIU_A2_VLV)_OP PUI: JSPX96IM0467K EXECUTE GMT _____:_____:_____ (HR:MIN:SEC) 2. VERIFY: PDB_A2 _RPC 2 POSN (DIU A2 VDO) – OP ENG:PDB_A2 RPC2 POWER STATUS PUI: JSDC00FCP20DJ	
114-058	KCDH	MS1	PCS JPM:JEM_EPS:PDB A2 'PDB A2 RPC DETAILS' 1. CMD: RPC 6 (DIU_A2_CNTRL) – OPEN OPS JPM_EPS_PDB_A2_RPC06_(DIU_A2_CNTLR)_OP PUI: JSPX96IM0471K EXECUTE GMT _____:_____:_____ (HR:MIN:SEC) 2. VERIFY: RPC 6 POSN (DIU_A2 CNTRL) – OP ENG: PDB_A2 RPC6 POWER STATUS PUI: JSDC00FCP20HJ	

RELEASED - Printed documents may be obsolete; validate prior to use.

SECTION IV - OPERATION INSTRUCTIONS

SEQ/STEP	CMD	RESP	DESCRIPTION	VERIF.
			DEACTIVATE PDB_A2	
114-059	KEPS	MS1	PCS JPM:JEM_EPS:PDU A1 'PDU A1 RPC DETAILS' 'PDU A1' 1 CMD: PDU A1 RPC11 (PDB A2) - OPEN PUI: JSPX96IM0757K OPS: JPM_EPS_PDU_A1_RPC11_(PDB_A2)_OP EXECUTE GMT _____:_____:_____ (HR:MIN:SEC) 2. VERIFY: PDU A1 RPC11 POSN - OP PUI: JSDC00FCPH0QJ ENG: SYS_PDU_A RPC11 POWER STATUS	
			DEACTIVATE TAC-L	
114-060	KTCS	SSFE	CES MATE LOAD AND RUN MATE SCRIPT MEIT3_MATE_CMDS INDEX: 0X011B CMD: PDB TCS1 RPC 2 – OPEN PUI: JSPC96IM0002K OPS: JPM_EPS_PDB_A_TCS1_RPC02_(TCA_L_TAC_A)_OP_(OVRD) GMT _____:_____:_____ (HR:MIN:SEC)	
114-061	KTCS	MS1	PCS JPM:JEM_TCS:JPM ATCS LTL 'JPM ATCS LTL' 'TCA L' 'TAC' VERIFY: PDB TCS 1 RPC 2 POSITION – OP PUI: JSDC00FCP90DJ ENG: PDB_TCS1 RPC2 POWER STATUS	

RELEASED - Printed documents may be obsolete; validate prior to use.

SECTION IV - OPERATION INSTRUCTIONS

SEQ/STEP	CMD	RESP	DESCRIPTION	VERIF.
			DEACTIVATE PUMP INVERTER	
114-062	KTCS	SSFE	CES MATE LOAD AND RUN MATE SCRIPT MEIT3_MATE_CMDS INDEX: 0X011C CMD: PDB TCS1 RPC4 – OP PUI: JSPC96IM0003K OPS: JPM_EPS_PDB_A_TCS1_RPC04_(TCA_L_PUMP_A_INV)_OP_(OVRD) GMT _____:_____:_____ (HR:MIN:SEC)	
114-063	KTCS	MS1	PCS JPM:JEM_TCS:JPM ATCS LTL 'JPM ATCS LTL' VERIFY: PDB TCS 1 RPC 4 POSN – OP PUI: JSDC00FCP90FJ ENG: PDB_TCS1 RPC4 POWER STATUS	
			DEACTIVATE PDB TCS 1	
114-064	KEPS	MS1	PCS JPM:EPS:PDU A1 'PDU A1 RPC DETAILS' 'PDU A1' 1. CMD: PDU A1 RPC6 (PDB TCS1) - OPEN PUI: JSPX96IM0753K OPS: JPM_EPS_PDU_A1_RPC06_(PDB_A_TCS1)_OP EXECUTE GMT _____:_____:_____ (HR:MIN:SEC) 2. VERIFY: PDU A1 RPC6 POSN-OP PUI: JSDC00FCPH0LJ ENG: SYS_PDU_A RPC6 POWER STATUS	

RELEASED - Printed documents may be obsolete; validate prior to use.

SECTION IV - OPERATION INSTRUCTIONS

SEQ/STEP	CMD	RESP	DESCRIPTION	VERIF.
			JEM B STRING DEACTIVATION (JCP-B PRIMARY)	
114-065	PTC	KCDH DKQM	PERFORM FLIGHT PCS DEACTIVATION IN JEM PER OMI R2009 SEQUENCE 09. REPORT COMPLETE. START GMT _____:_____:_____ (DAY:HR:MIN) COMPLETE GMT _____:_____:_____ (DAY:HR:MIN)	NV:_____
114-066	KEPS	SDAS	PDAS VERIFY/RECORD: JEM A STRING INPUT CURRENT _____ (</= 5 AMPS)	
114-067	KEPS	DET1 DKQN	OPEN EPS MANUAL SWITCH FOR JEM A POWER STRING.	TNW:_____
			POWER OFF JPM IMV RETURN FAN	
			INHIBIT FDIR JEM IMV-B ROTATION	
114-068	KECL	SSFE	CES MATE: LOAD AND RUN MATE SCRIPT MEIT3_CMDS_MATE INDEX: 0X0069 OPS: JPM_CDH_ACTIVE_JCP_EVENT_DET_INH_TMPLT PUI: JSDD96IM0228K PARAMETER: 455 (JEM IMV RETURN FAN ROTATIONAL RATE OUT OF LIMIT) GMT _____:_____:_____ (HR:MIN:SEC)	
114-069	KECL		TCMS:B-STRING VERIFY: ROTATION RATE OUT OF LIMIT EVENT FLAG – INHIBIT ENG: EVENT INHIBIT FLAG(JEM IMV RETURN FAN ROTATIONAL RATE OUT OF LIMIT) PUI: JSDC00SWZ38BJ	

RELEASED - Printed documents may be obsolete; validate prior to use.

SECTION IV - OPERATION INSTRUCTIONS

SEQ/STEP	CMD	RESP	DESCRIPTION	VERIF.
			STOP IMV-B FAN	
114-070	KECL	MS1	PCS JPM:ECLSS:IMV STBD AFT FAN JPM IMV FANS 'IMV STBD AFT FAN' 1. CMD: OFF OPS: JPM_ECL_IMV_STBD_AFT_FAN_B_STOP PUI: JSET96IM0001K GMT _____:_____:_____ (HR:MIN:SEC) (RECORD IN APPENDIX G) 2. VERIFY/RECORD: SPEED – _____ RPM (-6580 +/- 340 RPM) ENG: JEM_IMV_RETURN_FAN REV PUI: JSDC00FCE100R	
114-071	KECL	MS1	PCS JPM:ECLSS:IMV_STBD_AFT_FAN:PDB EPS2 RPC DETAILS PDB EPS2 RPC DETAILS 'PDB EPS2' 1. CMD: RPC 4 (IMV RETURN FAN) - OPEN OPS: JPM_EPS_PDB_B_EPS2_RPC04_(JPM_IMV_STBD_AFT_FAN_B)_OP PUI: JSPX96IM0576K GMT _____:_____:_____ (HR:MIN:SEC) 2. VERIFY: RPC 4 (IMV RETURN FAN) POSN – OP ENG: PDB_EPS2 RPC4 POWER STATUS PUI: JSDC00FCP80FJ	

RELEASED - Printed documents may be obsolete; validate prior to use.

SECTION IV - OPERATION INSTRUCTIONS

SEQ/STEP	CMD	RESP	DESCRIPTION	VERIF.
			CLOSE IMV RETURN VALVE	
114-072	KECL	MS1	PCS JPM:ECLSS:IMV STBD AFT VLV:PIB B1 SWITCH DETAILS PIB B1 SWITCH DETAILS '120V/0.5A' 1. CMD: SWITCH 1 (JPM IMV STBD AFT VLV B) - CLOSE OPS: JPM_EPS_PIB_B1_120V_L_SW01_(JPMIMVSTBDAFTV LVB)_CL PUI: JSPX96IM0673K GMT _____:_____:_____ (HR:MIN:SEC) 2. VERIFY: SWITCH 1 POSN (JPM IMV STBD AFT VLV B) – CL ENG: PIB_B1 120V_L SW1 POWER STATUS PUI: JSDC00FCPE20J	

RELEASED - Printed documents may be obsolete; validate prior to use.

SECTION IV - OPERATION INSTRUCTIONS

SEQ/STEP	CMD	RESP	DESCRIPTION	VERIF.
114-073	KECL	MS1	PCS JPM:ECLSS:IMV STBD AFT VLV JPM IMV VALVES 'IMV STBD AFT VALVE' 1. CMD: POSITION - CLOSED OPS: JPM_ECL_IMV_STBD_AFT_VLV_B_POSN_CL PUI: JSET96IM0010K GMT _____:_____:_____ (HR:MIN:SEC) 2. CMD: VALVE ENABLE - ENABLE OPS: JPM_ECL_IMV_STBD_AFT_VLV_B_ENA PUI: JSET96IM0013K GMT _____:_____:_____ (HR:MIN:SEC) **NOTE** VALVE TRANSITION MAY TAKE APPROXIMATELY 35 SECONDS. VERIFY: 3. VALVE POSITION (STACK) – CLOSE ENG: JEM_IMV_RETURN_VALVE STACK POSTN PUI: JSDC00SWE351J 4. SWITCH 1 POSN – OP ENG: PIB_B1 120V_L SW1 POWER STATUS PUI: JSDC00FCPE20J	

RELEASED - Printed documents may be obsolete; validate prior to use.

SECTION IV - OPERATION INSTRUCTIONS

SEQ/STEP	CMD	RESP	DESCRIPTION	VERIF.

POWER OFF THC-B

NOTE

THC-B HEALTH STATUS SUMMARY STACK MAY INDICATE “ERROR” AND THC-B PARTICLE FILTER STATUS STACK AND THC-B WATER SEPARATOR STATUS STACK MAY INDICATE “ABNORMAL” WHEN THE FOLLOWING STEP IS PERFORMED.

114-074 KECL MS1

PCS
JPM:ECLSS:THC B:THC B COMMANDS
JEM THC B COMMANDS

‘THC B’

1. CMD: OPS MODE - STANDBY
   OPS: JPM_ECL_THC_B_OPS_MODE_STANDBY
   PUI: JSET96IM0043K

   GMT _____:_____:_____ (HR:MIN:SEC) (RECORD IN APPENDIX G)

2. VERIFY: OPS MODE - STANDBY
   ENG: THC_B RUN STATUS
   PUI: JSDC00FCEC0XJ

3. RECORD: SPEED – _____ RPM (BD)
   ENG: THC_B CABIN FAN SPEED CURRENT
   PUI: JSDC00FCEC02R

114-075 KECL SSFE

CES MATE:
LOAD AND RUN MATE SCRIPT
MEIT3_CMDS_MATE
INDEX: 0X003C

CMD: DIU_B2/ THCU_B COM – STOP
OPS: JPM_CDH_DIU/ORU_(RS422)_COMM_STOP_TMPLT
PUI: JSDD96IM0036K
PARAMETER: 10 (DIU_B2)
PARAMETER: 2 (THCU_B)

GMT _____:_____:_____ (HR:MIN:SEC)

RELEASED - Printed documents may be obsolete; validate prior to use.

SECTION IV - OPERATION INSTRUCTIONS

SEQ/STEP	CMD	RESP	DESCRIPTION	VERIF.
114-076	KECL	MS1	PCS JPM:ECLSS:THC B:THC B COMMANDS JPM THC B COMMANDS 'STATUS' VERIFY: DATA FRAME STAT - LAST_VALUE ENG: THC_B DF STATUS PUI: JSDC00SWEC20J	
114-077	KECL	MS1	PCS JPM:ECLSS:THC B:THC B COMMANDS:PDB TCS2 RPC DETAILS PDB TCS2 RPC DETAILS 'PDB TCS2' 1. CMD: RPC 5 (THCU) - OPEN OPS: JPM_EPS_PDB_B_TCS2_RPC05_(THCU_B)_OP PUI: JSPX96IM0609K GMT _____:_____:_____ (HR:MIN:SEC) 2. VERIFY: RPC 5 (THCU B) POSN - OP ENG: PDB_TCS2 RPC5 POWER STATUS PUI: JSDC00FCPA0GJ	
114-078	KECL	MS1	PCS JPM:ECLSS:THC B:THC B COMMANDS:PDB_TCS2 RPC DETAILS PDB TCS 2 RPC DETAILS 'PDB TCS2' 1. CMD: RPC 1 (THC B FAN) - OPEN OPS: JPM_EPS_PDB_B_TCS2_RPC01_(THC_B_FAN)_OP_OVRD PUI: JSPX96IM0606K GMT _____:_____:_____ (HR:MIN:SEC) 2. VERIFY: RPC 1 (THC B FAN) - OP ENG: PDB_TCS2 RPC1 POWER STATUS PUI: JSDC00FCPA0CJ	

RELEASED - Printed documents may be obsolete; validate prior to use.

SECTION IV - OPERATION INSTRUCTIONS

SEQ/STEP	CMD	RESP	DESCRIPTION	VERIF.
			STOP PM CABIN_B FDS MONITOR	
114-079	KECL	MS1	PCS JPM:ECLSS:SD B JPM CABIN SMOKE DETECTOR B 'MONITORING' 1. CMD: INHIBIT OPS: JPM_ECL-FDS_CABIN_SD_B_MONITOR_STOP PUI: JSEF96IM0032K GMT _____:_____:_____ (HR:MIN:SEC) 2. VERIFY: STATUS - INVALID ENG: PM_CABIN_SD_B MONITOR STATUS PUI: JSDC00FCE722J	
114-080	KECL	MS1	PCS JPM:EPS:PIB B2 PDB TCS 2 RPC DETAILS '120V/0.5A' 1. CMD: SWITCH 18 (CABIN SD B) – OP OPS: JPM_EPS_PIB_B2_120V_L_SW18_(JPM_CABIN_SD_B)_OP PUI: JSPX96IM0808K GMT _____:_____:_____ (HR:MIN:SEC) 2. VERIFY: SWITCH 18 (CABIN SD B) POSN - OP ENG: PIB_B2 120V_L SW18 POWER STATUS PUI: JSDC00FCPK2HJ	

RELEASED - Printed documents may be obsolete; validate prior to use.

SECTION IV - OPERATION INSTRUCTIONS

SEQ/STEP	CMD	RESP	DESCRIPTION	VERIF.
			SHUTDOWN N2 PRESSURE SENSOR	
114-081	KECL	MS1	PCS JPM: EPS:PIB B1 PIB B1 RPC DETAILS '15V/0.05A' 1. CMD: SWITCH 2 (GN2 SPLY LINE PRESS SNSR B) - OPEN OPS: JPM_EPS_PIB_B1_15V_SW02_(N2_SPLY_LINE_PRESS_SNSR)_OP PUI: JSPX96IM0676K GMT _____:_____:_____ (HR:MIN:SEC) 2. VERIFY: SWITCH 2 (GN2 SPLY LINE PRESS SNSR B) POSN - OP ENG: PIB_B1 15V SW2 POWER STATUS PUI: JSDC00FCPE1PJ	

RELEASED - Printed documents may be obsolete; validate prior to use.

SECTION IV - OPERATION INSTRUCTIONS

SEQ/STEP	CMD	RESP	DESCRIPTION	VERIF.
			DEACTIVATE JEFHX INLET FRS B	
114-082	KTCS	SSFE	CES MATE LOAD AND RUN MATE SCRIPT MEIT3_MATE_CMDS INDEX: 0X00C9 CMD: PIB B2 120V L SW 36 – OP ENG: JPM_EPS_PIB_B2_120V_L_SW36_(MTL JEF HX IN FRS B)_OP PUI: JSTE96IM0248K GMT _____:_____:_____ (HR:MIN:SEC)	
114-083	KTCS		TCMS VERIFY: PIB_B2 120V_L SW36 POWER STATUS - OP PUI: JSDC00FCPK2ZJ	
			DEACTIVATE MTL DIFFERENTIAL PRESSURE SENSOR B	
114-084	KTCS	SSFE	CES MATE LOAD AND RUN MATE SCRIPT MEIT3_MATE_CMDS INDEX: 0X00C7 CMD: PIB B2 15V SW7 - OP ENG: PIB_B2_15V_SW7_OP_(MTL_DIFF_PRESS_SNSR_B) PUI: JSTE96IM0236K GMT _____:_____:_____ (HR:MIN:SEC)	
114-085	KTCS		TCMS VERIFY: PIB_B2 15V SW7 POWER STATUS- OP PUI: JSDC00FCPK1UJ	

RELEASED - Printed documents may be obsolete; validate prior to use.

SECTION IV - OPERATION INSTRUCTIONS

SEQ/STEP	CMD	RESP	DESCRIPTION	VERIF.
			DEACTIVATE PIB-B2	
114-086	KEPS	MS1	PCS JPM:EPS:PDB B1 'PDB B1 RPC DETAILS' 'PDB B1' 1. CMD: PDB B1 RPC3 - OPEN PUI: JSPX96IM0491K OPS: JPM_EPS_PDB_B1_RPC03_(PIB_B2)_OP EXECUTE GMT _____:_____:_____ (HR:MIN:SEC) 2. VERIFY: PDB B1 RPC3 POSN - OP PUI: JSDC00FCP30LJ ENG: PDB_B1 RPC3 POWER STATUS	
			DEACTIVATE PDB_B2	
114-087	KEPS	MS1	PCS JPM:EPS:PDU B1 'PDU B1 RPC DETAILS' 'PDU B1' 1. CMD: PDU B1_RPC2 - OPEN PUI: JSPX96IM0775K OPS: JPM_EPS_PDU_B1_RPC02_(PDB_B2)_OP EXECUTE GMT _____:_____:_____ (HR:MIN:SEC) 2. VERIFY: PDU B1 RPC2 POSN - OP PUI: JSDC00FCPI0KJ ENG: SYS_PDU_B RPC2 POWER STATUS	

RELEASED - Printed documents may be obsolete; validate prior to use.

SECTION IV - OPERATION INSTRUCTIONS

SEQ/STEP	CMD	RESP	DESCRIPTION	VERIF.
			DEACTIVATE DIU_B1 VDO POWER	
114-088	KCDH	MS1	PCS JPM:JEM_EPS:PDB EPS 2 'PDB EPS2 RPC DETAILS' 1. CMD: RPC 2 (DIU B1 VDO) - OPEN ENG: JPM_EPS_PDB_B_EPS2_RPC02_(DIU_B1_VLV)_OP PUI: JSPX96IM0574K EXECUTE GMT _____:_____:_____ (HR:MIN:SEC) 2. VERIFY: RPC 2 POSN (DIU B1 VDO) – OP ENG: PDB_EPS2 RPC2 POWER STATUS PUI: JSDC00FCP80DJ	
			DEACTIVATE DIU_B2	
114-089	KCDH	SSFE	CES MATE LOAD AND RUN MATE SCRIPT MEIT3_MATE_CMDS INDEX: 0X011F CMD: PDB_B1 RPC 1 (DIU B2 VDO) - OPEN OPS: JPM_EPS_PDB_B1_RPC01_(DIU_B2_VDO)_OP_(OVRD) PUI: JSPC96IM0001K EXECUTE GMT _____:_____:_____ (HR:MIN:SEC)	
114-090	KCDH	MS1	PCS JPM:EPS:PDB B1 'PDB B1 RPC DETAILS' VERIFY: RPC 1 POSN (DIU B2 VDO) – OP ENG: PDB_B1 RPC1 POWER STATUS PUI: JSDC00FCP30JJ	

RELEASED - Printed documents may be obsolete; validate prior to use.

SECTION IV - OPERATION INSTRUCTIONS

SEQ/STEP	CMD	RESP	DESCRIPTION	VERIF.
114-091	KCDH	MS1	PCS JPM:EPS:PDB B1 'PDB B1 RPC DETAILS' CMD: RPC 9 (DIU B2 CNTRL) – OPEN OPS: JPM_EPS_PDB_B1_RPC09_(DIU_B2_CNTLR)_OP PUI: JSPX96IM0493K GMT _____:_____:_____ (HR:MIN:SEC) VERIFY: RPC 9 POSN (DIU B2 CNTRL) - OP ENG: PDB_B1 RPC9 POWER STATUS PUI: JSDC00FCP30RJ **DEACTIVATE DIU-B3**	
114-092	KCDH	MS1	PCS JPM:EPS:PDB B1 'PDB B1 RPC DETAILS' 1. CMD: RPC 2 (DIU B3 VDO) - OPEN OPS: JPM_EPS_PDB_B1_RPC02_(DIU_B3_VLV)_OP PUI: JSPX96IM0490K EXECUTE GMT _____:_____:_____ (HR:MIN:SEC) 2. VERIFY: RPC 2 (DIU B3 VDO) POSN – OP ENG: PDB_B1 RPC2 POWER STATUS PUI: JSDC00FCP30KJ	
114-093	KCDH	MS1	PCS JPM:EPS:PDB B1 'PDB B1 RPC DETAILS' 1. CMD: RPC 10 (DIU B3 CNTRL)-OP: JPM_EPS_PDB_B1_RPC10_(DIU_B3_CNTLR)_OP PUI: JSPX96IM0494K GMT _____:_____:_____ (HR:MIN:SEC) 2. VERIFY: RPC 10 POSN (DIU B3 CNTRL) POSN - OP ENG PDB_B1 RPC10 POWER STATUS- PUI: JSDC00FCP30SJ	

RELEASED - Printed documents may be obsolete; validate prior to use.

SECTION IV - OPERATION INSTRUCTIONS

SEQ/STEP	CMD	RESP	DESCRIPTION	VERIF.
			DEACTIVATE PDB-B1	
114-094	KEPS	MS1	PCS JPM:EPS:PDU B1 'PDU B1 RPC DETAILS' 1. CMD: PDU B1 RPC9 - OPEN OPS: JPM_EPS_PDU_B1_RPC09_(PDB_B1)_OP PUI: JSPX96IM0779K GMT _____:_____:_____ (HR:MIN:SEC) VERIFY: 2. PDU B1 RPC9 POSN - OP ENG: SYS_PDU_B RPC9 POWER STATUS PUI: JSDC00FCPI0RJ	
			ENABLE I/O AND FDIR BETWEEN C&C AND DIU EPS 2	
114-095	KCDH	MS1	PCS JPM:TASK:JPM CHANNEL B INITIAL ACTIVATION 'DIU EPS 2' 1. CMD: 18 DIU EPS 2 RT I/O – ENABLE OPS:PRIM_CCS_ENA_RT_TMPLT PUI: LADD96IM1018K GMT _____:_____:_____ (HR:MIN:SEC) VERIFY: 2. CMD: 18 DIU EPS 2 RT I/O – ENA ENG: PRIM_CCS_CB_EXT_2_RT_ENA_JEM_DIU_2_RT_18 PUI: LADP01MDAVUTJ GMT _____:_____:_____ (HR:MIN:SEC) 3. DATA FRAME COUNTER - INCREMENTING ENG: DIU-III-B STATUS/DISCRETE INPUT DATA FRAME TIME TAG PUI: JMDC04FC0011W	

RELEASED - Printed documents may be obsolete; validate prior to use.

SECTION IV - OPERATION INSTRUCTIONS

SEQ/STEP	CMD	RESP	DESCRIPTION	VERIF.
114-096	KCDH	MS1	PCS JEM:TASK:JPM CHANNEL B INITIAL ACTIVATION ‘DIU EPS 2’ 1. CMD: RT-FDIR - ENABLE OPS: PRIM_CCS_ENA FDIR_TMPLT PUI: LADD96IM0769K GMT _____:_____:_____ (HR:MIN:SEC) 2. VERIFY: RT FDIR - ENA ENG: PRIM_CCS_CB_EXT_2_RT_FDIR_INH_JEM_DIU_2_RT 18 PUI: LADP01MDAVUXJ	
114-097	KCDH	SSFE	CES MATE LOAD AND RUN MATE SCRIPT MEIT3_MATE_CMDS INDEX: 0X000A CMDS: JPM_CDH_DIU_B4_CMD_RCV_FROM_C&C_MDM_INH_OVRD PUI: JSDD96IM0008K GMT _____:_____:_____ (HR:MIN:SEC)	
114-098	KCDH		TCMS (ACTIVATION STR B: DIU EPS 2) VERIFY: ‘DIU CMD INHIBIT FLAG’ MDM COMMAND - ENA ENG: EPS_RACK2_DIU MDM COMMAND INHIBIT FLAG[ACT] PUI: JMDC04FCA61QJ	

RELEASED - Printed documents may be obsolete; validate prior to use.

SECTION IV - OPERATION INSTRUCTIONS

SEQ/STEP	CMD	RESP	DESCRIPTION	VERIF.
114-099	KCDH	MS1	PCS JPM:TASK:JPM CHANNEL B INITIAL ACTIVATION 'JCP B' 1. CMD: RT-FDIR – INH OPS: PRIM_CCS_INH_JCP_2_EXT_2_FDIR_RT_19 PUI: LADD95SM0097K GMT _____:_____:_____ (HR:MIN:SEC) 2. VERIFY RT FDIR – INH - OPS: PRIM_CCS_CB_EXT_2_RT_FDIR_INH_JCP_2_RT_19 PUI: LADP01MDAVUOJ **JCP DEACTIVATION** **NOTE** VERIFICATION OF JCP SHUTDOWN IS NOT POSSIBLE UNTIL COM IS RE-ENABLED BETWEEN DIU-EPS-2 AND C&C MDM. **NOTE** THE FOLLOWING C&W MESSAGE MAY BE GENERATED AFTER JCP SHUTDOWN AND COMMUNICATION IS DISCONTINUED WITH THE C&C MDM. "CDH PRIMARY JEM CONTROL PROCESSOR FAIL – JPM"	
114-100	KCDH	SSFE	CES MATE LOAD AND RUN MATE SCRIPT MEIT3_MATE_CMDS INDEX: 0X006E CMD: PM_CDH_JCP_B_SHUTDN PUI: JSDD96IM0269K GMT _____:_____:_____ (HR:MIN:SEC)	

RELEASED - Printed documents may be obsolete; validate prior to use.

SECTION IV - OPERATION INSTRUCTIONS

SEQ/STEP	CMD	RESP	DESCRIPTION	VERIF.

NOTE

WAIT APPOXIMATELY 2 MINUTE BEFORE
PERFORMING THE NEXT STEP.

114-101 KCDH MS1 PCS
TASK:JPM CHANNEL B INITIAL ACTIVATION

'JCP B'
VERIFY:
FRAME COUNT- NOT INCREMENTING
OPS: JPM_CDH_ACTIVE_JCP_FRM_CNT
PUI: JSDC00SWZ999U

GMT _____:_____:_____ (DAY:HR:MIN)

NOTE

WAIT APPOXIMATELY 1 MINUTES BEFORE
PERFORMING THE NEXT STEP

NOTE

MUST USE [ACT] PUIS FOR ALL JEM CMDS AND
TELEMETRY AFTER THIS POINT.

114-102 KCDH MS1 PCS
TASK:JPM CHANNEL B INITIAL ACTIVATION

'JCP B'

VERIFY:
FATAL ERROR – NORMAL
ENG: JCP_B_FAULT SIGNAL [ACT]
PUI: JMDC04FCZB03J

114-103 KCDH MS1 PCS
TASK:JPM CHANNEL B INITIAL ACTIVATION

'JCP B'

1. CMD: 19 JCP B RT I/O - INHIBIT
   OPS :PRIM_CCS_INH_JCP_2_CB_EXT_2_RT_19
   PUI: LADD95SM0094K

   GMT _____:_____:_____ (HR:MIN:SEC)

2. VERIFY: 19 JCP B RT I/O - INH
   OPS: PRIM_CCS_CB_EXT_2_RT_ENA_JCP_2_RT_19
   PUI: LADP01MDAVUKJ

RELEASED - Printed documents may be obsolete; validate prior to use.

SECTION IV - OPERATION INSTRUCTIONS

SEQ/STEP	CMD	RESP	DESCRIPTION	VERIF.
114-104	PTC	KCDH DKQM	PERFORM SLT DEACTIVATION PER OMI R2009 SEQUENCE 06. REPORT COMPLETE. START GMT _____:_____:_____ (DAY:HR:MIN) COMPLETE GMT _____:_____:_____ (DAY:HR:MIN)	NV:_____
114-105	PTC	KCDH DKQM	PERFORM JEM UOP DEACTIVATION PER OMI R2009 SEQUENCE 04 FOR UOP B2 AD5. REPORT COMPLETE. OPTION:_____ START GMT _____:_____:_____ (DAY:HR:MIN) COMPLETE GMT _____:_____:_____ (DAY:HR:MIN)	NV:_____
			POWER OFF JCP B	
114-106	KCDH	SSFE	CES MATE: LOAD AND RUN MATE SCRIPT MEIT3_MATE_ACT_CMDS INDEX: 0X002C CMD: JPM_EPS_PDB_B_DMS2_RPC01_(JCP_B_MPC/BIC)_OP_(A CT) PUI: LAPX96IM0397K GMT _____:_____:_____ (HR:MIN:SEC)	
114-107	KCDH		TMCS (PDB_DMS2 DETAILS) (PRE-JCP ACTIVATION DISPLAYS) VERIFY: RPC01 PWR STATUS (JCP_B_MPC/BIC) - OP ENG: PDB_DMS2 RPC1 POWER STATUS [ACT] PUI: JMDC04FCP60CJ	

RELEASED - Printed documents may be obsolete; validate prior to use.

SECTION IV - OPERATION INSTRUCTIONS

SEQ/STEP	CMD	RESP	DESCRIPTION	VERIF.
114-108	KCDH	SSFE	CES MATE: LOAD AND RUN MATE SCRIPT MEIT3_MATE_ACT_CMDS INDEX: 0X002D CMD: JPM_EPS_PDB_B_DMS2_RPC07_(JCP_B_EDSU)_OP_(ACT) PUI: LAPX96IM0398K GMT _____:_____:_____ (HR:MIN:SEC)	
114-109	KEPS		TCMS (PDB_DMS2) (PRE-JCP ACTIVATION) VERIFY: RPC07 PWR STATUS (EDSU)- OP ENG: PDB_DMS2 RPC7 POWER STATUS [ACT] PUI: JMDC04FCP60IJ **DEACTIVATE PDB-DMS2**	
114-110	KCDH	SSFE	CES MATE: LOAD AND RUN MATE SCRIPT MEIT3_MATE_ACT_CMDS INDEX: 0X001A 1. CMD: JPM_CDH_DIU_B4/PDB_B_DMS2_(RS422_CH1)_COMM _STOP_(ACT) PUI: LADD96IM1102K GMT _____:_____:_____ (HR:MIN:SEC) 2. DATA FRAME COUNTER – “NOT INCREMENTING” ENG: PDB_DMS2 DATA FRAME TIME TAG PUI: JMDC04FC0041W	

RELEASED - Printed documents may be obsolete; validate prior to use.

SECTION IV - OPERATION INSTRUCTIONS

SEQ/STEP	CMD	RESP	DESCRIPTION	VERIF.
114-111	KEPS	MS1	PCS TASK:JPM CHANNEL B INITIAL ACTIVATION 'JPM CHANNEL B INITIAL ACTIVATION' 'PDB DMS2' 1. CMD: PDU B1 RPC 3 – OPEN PUI: LAPX961M0457K OPS :JPM_EPS_PDU_B1_RPC03_(PDB_B_DMS2)_OP_(ACT) EXECUTE GMT _____:_____:_____ (HR:MIN:SEC) 2. VERIFY: PDU B1 RPC 3 POSN – OP PUI: JMDC04FCPI0LJ ENG: SYS_PDU_B RPC3 POWER STATUS [ACT] **MTL DEACTIVATION** **STOP MTL TEMP CONTROL & DEACTIVATE MTL TCV**	
114-112	KTCS	MS1	PCS TASK:JPM CHANNEL B INITIAL ACTIVATION:JPM MTL ACTIVATION 'JPM MTL ACTIVATION' 'MTL TEMP' 1. CMD MTL TEMP CNTL - STOP ENG: JPM_ATCS_TCA_M_MTL_TWMV_B_TEMP_CNTL_STOP_(ACT) PUI: LATX96IM0146K GMT _____:_____:_____ (HR:MIN:SEC) 2. VERIFY CNTL STATE - STOP ENG: TCA_M MTL TEMP CNTRL EXECUTING STAT [ACT] PUI: JMDC04FCTC0IJ	
114-113	KTCS	SSFE	CES MATE LOAD AND RUN MATE SCRIPT MEIT3_MATE_ACT_CMDS INDEX: 0X0039 CMD: SELECT_TCA_M_MTL_TEMP_CNTRL_VALVE_IF_HX_ACT PUI: LATX96IM0166K GMT _____:_____:_____ (HR:MIN:SEC)	

RELEASED - Printed documents may be obsolete; validate prior to use.

SECTION IV - OPERATION INSTRUCTIONS

SEQ/STEP	CMD	RESP	DESCRIPTION	VERIF.
114-114	KTCS	MS1	PCS TASK:JPM CHANNEL B INITIAL ACTIVATION:JPM MTL ACTIVATION 'JPM MTL ACTIVATION' 'MTL TCV B' VERIFY VALVE POSN - IFHX ENG: TCA_M MTL TEMP CNTRL VALVE POSTN PUI: JSDC00FCT5E0J	
114-115	KTCS	MS1	PCS TASK:JPM CHANNEL B INITIAL ACTIVATION:JPM MTL ACTIVATION 'JPM MTL ACTIVATION' 'MTL TCV B' 1. CMD PIB B1 120V L SW3 POSN – OPEN ENG: JPM_EPS_PIB_B1_120V_L_SW03_(TCA_M_MTL_TWMV_B)_OP_(ACT) PUI: LAPX96IM0420K GMT _____:_____:_____ (HR:MIN:SEC) 2. VERIFY PIB B1 120VL SW3 POSN - OP OPS: PIB_B1 120V_L SW3 POWER STATUS [ACT] PUI: JMDC04FCPE22J	

RELEASED - Printed documents may be obsolete; validate prior to use.

SECTION IV - OPERATION INSTRUCTIONS

SEQ/STEP	CMD	RESP	DESCRIPTION	VERIF.

DEACTIVATE MTL PUMP

CAUTION

MTL ACCUMULATOR SOV MUST BE DEACTIVATED WITHIN 5 MINUTES AFTER MTL PUMP DEACTIVATION. THE FOLLOWING 4 STEPS ARE TIME CRITICAL AND MUST BE PERFORMED AS QUICKLY AS POSSIBLE TO PREVENT HARDWARE DAMAGE.

CAUTION

MTL TAC MUST BE DEACTIVATED WITHIN 10 MINUTES AFTER MTL PUMP DEACTIVATION. THE FOLLOWING 7 STEPS ARE TIME CRITICAL AND MUST BE PERFORMED AS QUICKLY AS POSSIBLE TO PREVENT HARDWARE DAMAGE.

NOTE

DUE TO THE TIME CONSTRAINT IN THE FOLLOWING STEPS A SECOND PCS WILL BE SHADOWING THE DISPLAY NAVIGATION FOR A SECONDARY COMMAND AND TELEMETRY SOURCE.

NOTE

ALL PERSONNEL BE FAMILIAR WITH THE FOLLOWING STEPS, NOTES AND CAUTIONS IN THE TIME CRITICAL WINDOW. BE AWARE OF THE NESTED TIME CRITICAL CAUTIONS AND TIME CONSTRAINTS.

RELEASED - Printed documents may be obsolete; validate prior to use.

SECTION IV - OPERATION INSTRUCTIONS

SEQ/STEP	CMD	RESP	DESCRIPTION	VERIF.
114-116	KTCS	MS1	PCS TASK:JPM CHANNEL B INITIAL ACTIVATION:JPM MTL ACTIVATION 'JPM MTL ACTIVATION' 'TCA M PUMP' 1. CMD OPERATION - STOP ENG: JPM_ATCS_TCA_M_PUMP_B_STOP_(ACT) PUI: LATX96IM0144K GMT _____:_____:_____ (HR:MIN:SEC) VERIFY: 2. OPERATION - STOPPED OPS: TCA_M MTL EXECUTING STATUS [ACT] PUI: JMDC04FCTC0HJ 3. SPEED – 0+/-329 RPM OPS: TCA_M PUMP REV [ACT] PUI: JMDC04FCTC1OR	
114-117	KTCS	SSFE	CES MATE LOAD AND RUN MATE SCRIPT MEIT3_MATE_ACT_CMDS INDEX: 0X0036 ISSUE: STOP_TCA_M_PRESS CNTRL ENG: JPM_ATCS_TCA_M_PUMP_B_IN_PRESS_CNTL_STOP_(ACT) PUI: LATX96IM0153K GMT _____:_____:_____ (HR:MIN:SEC)	
114-118	KTCS		TCMS VERIFY TCA_M MTL PRESS CNTRL EXECUTING STATUS [ACT] - STOP PUI: JMDC04FCTC0KJ	

RELEASED - Printed documents may be obsolete; validate prior to use.

SECTION IV - OPERATION INSTRUCTIONS

SEQ/STEP	CMD	RESP	DESCRIPTION	VERIF.

114-119 KTCS MS1 PCS
TASK:JPM CHANNEL B INITIAL ACTIVATION:JPM MTL ACTIVATION
'JPM MTL ACTIVATION'

'TCA M ACCUMULATOR'

1. CMD: INLET VAVLE POSN – CLOSE
   ENG: JPM_ATCS_TCA_M_ACCUM_SOV_B_CL_(ACT)
   PUI: LATX96IM0148K

   GMT _____:_____:_____ (HR:MIN:SEC)

2. VERIFY INLET VALVE POSN - CLOSE
   OPS: TCA_M ACCUMULATOR INLET VALVE POSTN
   [ACT]
   PUI: JMDC04FCTC04J

114-120 KTCS MS1 PCS
TASK:JPM CHANNEL B INITIAL ACTIVATION:JPM MTL ACTIVATION

'JPM MTL ACTIVATION'

'TCA M ACCUMULATOR TELEMETRY'

RECORD AND VERIFY THE FOLLOWING PARAMETERS:

NOMENCLATURE	ACTUAL VALUE	EXPECTED VALUE	PUI
ACCUM WATER VOL 1		0.66-4.7 L	JMDC04FCTC02Q
ACCUM WATER VOL 2		0.66-4.7 L	JMDC04FCTC03Q
ACCUM WATER PRESS 1		BD	JMDC04FCTC00P
ACCUM WATER PRESS 2		BD	JMDC04FCTC01P

RELEASED - Printed documents may be obsolete; validate prior to use.

SECTION IV - OPERATION INSTRUCTIONS

SEQ/STEP	CMD	RESP	DESCRIPTION	VERIF.

DEACTIVATE TAC B/TCA M

114-121 KTCS MS1 PCS
TASK:JPM CHANNEL B INITIAL ACTIVATION:JPM MTL ACTIVATION
'JPM MTL ACTIVATION'

'TCA M TAC'

1. CMD DIU EPS2/TCA M TAC COMM - STOP
   ENG:
   DIU_EPS2_SIO4_B_STOP_SMPLNG_(TCA_M)_ACT
   PUI: LADD95SM0406K

   GMT _____:_____:_____ (HR:MIN:SEC)

2. DATA FRAME COUNTER – "NOT INCREMENTING"
   ENG: TCA_M DATA FRAME TIME TAG
   PUI: JMDC04FC0091W

114-122 KTCS MS1 PCS
TASK:JPM CHANNEL B INITIAL ACTIVATION:JPM MTL ACTIVATION
'JPM MTL ACTIVATION'

'TCA M TAC'

1. CMD: PDB TCS 2 RPC 2 POSN – OPEN
   OPS:
   JPM_EPS_PDB_B_TCS2_RPC02_(TCA_M_TAC_B)_OP
   _(ACT)
   PUI: LAPX96IM0407K

   GMT _____:_____:_____ (HR:MIN:SEC)

2. VERIFY: PDB PDB TCS 2 RPC 2 POSN – OP
   ENG: PDB_TCS2 RPC2 POWER STATUS [ACT]
   PUI: JMDC04FCPA0DJ

RECONFIGURE B-STRING ATCS TO GSE PUMP

RECONFIGTURE TCS LOOP

114-123 KTCS TLM MANUALLY SET TCA_L MTL THERMAL CONTROL VALVE POSITON TO PORT B(IFHX). REPORT COMPLETE.

TAG NO.	NOMENCLATURE	POSITION
MV1152	TCA_L MTL THERMAL CONTROL VALVE	PORT B (IFHX)

RELEASED - Printed documents may be obsolete; validate prior to use.

SECTION IV - OPERATION INSTRUCTIONS

SEQ/STEP	CMD	RESP	DESCRIPTION	VERIF.
114-124	KTCS	TLM	MANUALLY SET TCA_M MTL THERMAL CONTROL VALVE POSITON TO PORT B(IFHX). REPORT COMPLETE.	

TAG NO.	NOMENCLATURE	POSITION
MV1252	TCA_M MTL THERMAL CONTROL VALVE	PORT B (IFHX)

114-125 KTCS TLM RECONFIGURE MTL COOLING GSE FROM FLIGHT PUMP MODE TO GSE PUMP MODE AS FOLLOWS:

1. DISCONNECT QD B/C COUPLING PER FIGURE 1.
2. CONNECT QD A/B COUPLING PER FIGURE 1.
3. CONNECT QD C/D COUPLING PER FIGURE 1.
4. REPORT COMPLETE/

114-126 KTCS TLM START MTL COOLANT FROM RESOURCE SUPPLY EQUIPMENT. REPORT COMPLETE.

GMT _____:_____:_____ (DAY:HR:MIN)

114-127 TLM KTCS RECONFIGURE B-STRING ATCS TO GSE PUMP COMPLETE.

GMT _____:_____:_____ (DAY:HR:MIN)

DEACTIVATE PUMP POWER

114-128 KTCS MS1 PCS
TASK:JPM CHANNEL B INITIAL ACTIVATION:JPM MTL ACTIVATION
'JPM MTL ACTIVATION'

'TCA M'

1. CMD: PDB TCS 2 RPC 4 (PUMP) POSN – OPEN
   OPS: JPM_EPS_PDB_B_TCS2_RPC04_ (TCA_M_PUMP_B_INV)_OP_(ACT)
   PUI: LAPX96IM0405K

   GMT _____:_____:_____ (HR:MIN:SEC)

2. VERIFY: PDB TCS 2 RPC 4 (PUMP) POSN – OP
   ENG: PDB_TCS2 RPC4 POWER STATUS [ACT]
   PUI: JMDC04FCPA0FJ

RELEASED - Printed documents may be obsolete; validate prior to use.

SECTION IV - OPERATION INSTRUCTIONS

SEQ/STEP	CMD	RESP	DESCRIPTION	VERIF.

DEACTIVATE PDB_TCS2

114-129 KEPS MS1

PCS
TASK:JPM CHANNEL B INITIAL ACTIVATION:JPM MTL ACTIVATION
'JPM MTL ACTIVATION'
'PDB TCS2'

1. CMD: DIU EPS2/PDB TCS2 COMM - STOP
   OPS:
   JPM_CDH_DIU_B4/PDB_B_TCS2_(RS422_CH2)_COMM
   STOP(ACT)
   PUI: LADD95SM0404K

   GMT _____:_____:_____ (HR:MIN:SEC)

2. VERIFY: DATA FRAME COUNTER – "NOT INCREMENTING"
   ENG: PDB_TCS2 DATA FRAME TIME TAG
   PUI: JMDC04FC0051W

114-130 KEPS MS1

PCS
TASK:JPM CHANNEL B INITIAL ACTIVATION:JPM MTL ACTIVATION
'JPM MTL ACTIVATION'
'PDB TCS2'

1. CMD: PDU B1 RPC10 - OPEN
   PUI: JSPX96IM0780K
   OPS: JPM_EPS_PDU_B1_RPC10_(PDB_B_TCS)_OP
   EXECUTE

   GMT _____:_____:_____ (HR:MIN:SEC)

2. VERIFY:PDU B1 RPC10 POSN - OP
   PUI: JMDC04FCPI0SJ
   ENG: SYS_PDU_B_RPC10 POWER STATUS [ACT]

RELEASED - Printed documents may be obsolete; validate prior to use.

SECTION IV - OPERATION INSTRUCTIONS

SEQ/STEP	CMD	RESP	DESCRIPTION	VERIF.
			INHIBIT I/O AND FDIR BETWEEN C&C AND DIU EPS 2	
114-131	KCDH	MS1	PCS TASK:JPM CHANNEL B INITIAL ACTIVATION 'DIU EPS 2' 1. CMD: RT-FDIR – INH OPS: PRIM_CCS_INH FDIR _TMPLT PUI: LADD96IM077OK GMT _____:_____:_____ (HR:MIN:SEC) 2. VERIFY: RT-FDIR – INH ENG: PRIM_CCS_CB_EXT_2_RT_FDIR_INH _JEM_DIU 2_RT_18 PUI: LADP01MDAVUXJ	
114-132	KCDH	MS1	PCS TASK:JPM CHANNEL B INITIAL ACTIVATION 'DIU EPS 2' 1. CMD: 18 DIU EPS 2 RT I/O – INH OPS:PRIM_CCS_ENA_RT_TMPLT PUI: LADD96IM1018K GMT _____:_____:_____ (HR:MIN:SEC) 2. 18 DIU EPS 2 RT I/O – INH ENG:: PRIM_CCS_CB_EXT_2_RT_ENA_JEM_DIU_2_RT_18 PUI: LADP01MDAVUTJ 3. DATA FRAME COUNTER – NOT INCREMENTING ENG:DIU-III-B STATUS/DISCRETEINPUT DATA FRAME TIME TAG. PUI: JMDC04FC0011W	VERIFY:
114-133	KEPS	SDAS	PDAS VERIFY/RECORD: JEM B STRING INPUT CURRENT _____ (</= 5 AMPS)	
114-134	KEPS	DET1 DKQN	OPEN EPS MANUAL SWITCH FOR JEM B POWER STRING.	

TNW:_____

RELEASED - Printed documents may be obsolete; validate prior to use.

SECTION IV - OPERATION INSTRUCTIONS

SEQ/STEP	CMD	RESP	DESCRIPTION	VERIF.
			CONFIGURE MTL RACK	
114-135	KTCS	TLM DKQM	PERFORM NASDA PROCEDURE JTP-321015 TO DISCONNECT MTL TCS RACK FROM PM ITCS SYSTEM. REPORT COMPLETE. START GMT _____:_____:_____ (DAY:HR:MIN) COMPLETE GMT _____:_____:_____ (DAY:HR:MIN)	NV:_____
114-136	TIE PTC 052	PTC DKQM	JEM MODULE DEACTIVATION COMPLETE. GMT _____:_____:_____ (DAY:HR:MIN)	NV:_____

RELEASED - Printed documents may be obsolete; validate prior to use.

SECTION IV - OPERATION INSTRUCTIONS

SEQ/STEP	CMD	RESP	DESCRIPTION	VERIF.
115-000			**JEM A STRING ACTIVATION (JCP-A PRIMARY)**	
115-001	PTC	DKQM	RECORD THE FOLLOWING INFORMATION: GMT _____:_____:_____ (DAY:HR:MIN)	NV:_____
			NOTE JEM RT FDIR AND RT I/O INHIBIT VERIFICATIONS CAN BE PERFORMED IN PARALLEL WITH TCS, EPS OPERATIONS AND UOP CONNECTS.	
115-002	KEPS	DET1 DKQN	VERIFY THAT EPS MANUAL SWITCH FOR BOTH B-STRING AND A-STRING ARE OPEN.	TNV:_____
			NOTE PERFORM THE FOLLOWING STEP IF THIS SEQUENCE HAS NOT BEEN PERFORMED DURING PRE-OPERATIONS.	
115-003	PTC	KTCS DKQM	PERFORM TCS VALVE CONFIGURATION FOR JEM A STRING ACTIVATION (JCP A PRIMARY) PER PRE-OP SEQUENCE 13 . REPORT COMPLETE. START GMT _____:_____:_____ (DAY:HR:MIN) COMPLETE GMT _____:_____:_____ (DAY:HR:MIN)	NV:_____ NOT PERFORMED:_____

RELEASED - Printed documents may be obsolete; validate prior to use.

SECTION IV - OPERATION INSTRUCTIONS

SEQ/STEP	CMD	RESP	DESCRIPTION	VERIF.
			NOTE PERFORM THE FOLLOWING STEP IF THIS SEQUENCE HAS NOT BEEN PERFORMED DURING PRE-OPERATIONS.	
115-004	PTC	KTCS DKQM	PERFORM TCS DAILY GSE ACTIVATION PER PRE-OP SEQUENCE 17 . REPORT COMPLETE. START GMT _____:_____:_____ (DAY:HR:MIN COMPLETE GMT _____:_____:_____ (DAY:HR:MIN)	NV:_____ NOT PERFORMED:_____
			NOTE PERFORM THE FOLLOWING TWO STEPS AS REQUIRED IF USOS PCS REQUIRES RECONFIGURATION TO UOP-A3-FD6.	
115-005	PTC	KCDH DKQM	PERFORM DISCONNECT USOS PCS LAPTOP FROM JEM UTILITY OUTLET PANEL PER OMI R2009 SEQUENCE 02 FOR UOP-B2-AD5(J3). REPORT COMPLETE START GMT _____:_____:_____ (DAY:HR:MIN COMPLETE GMT _____:_____:_____ (DAY:HR:MIN)	NV:_____ NOT PERFORMED:_____
115-006	PTC	KCDH DKQM	PERFORM CONNECT USOS PCS LAPTOP TO JEM UTILITY OUTLET PANEL PER OMI R2009 SEQUENCE 01 FOR UOP-A3-FD6(J3). REPORT COMPLETE. START GMT _____:_____:_____ (DAY:HR:MIN) COMPLETE GMT _____:_____:_____ (DAY:HR:MIN)	NV:_____ NOT PERFORMED:_____

RELEASED - Printed documents may be obsolete; validate prior to use.

SECTION IV - OPERATION INSTRUCTIONS

SEQ/STEP	CMD	RESP	DESCRIPTION	VERIF.
			NOTE PERFORM THE FOLLOWING STEP IF JEM SLT REQUIRES RECONFIGURATION TO UOP-A3-FD6	
115-007	PTC DKQM	TLM	RECONFIGURE JEM SLT TO JEM UOP-A3-FD6(J4) PER NASDA PROCEDURE JCX-2003117. REPORT COMPLETE. RECORD: START GMT _____:_____:_____ (DAY:HR:MIN COMPLETE GMT _____:_____:_____ (DAY:HR:MIN)	NV:_____ NOT PERFORMED:_____
115-008	KCDH		TCMS LOAD E_M3_PRE_JCP_DIU_EPS1	
115-009	KCDH	MS1	VERIFY USOS PCS CONNECTED TO JEM UOP UOP-A3-FD6 (J3).	
115-010	KCDH TLM	TLM MJ1	VERIFY JEM SLT CONNECTED TO JEM UOP UOP-A3-FD6 (J4).	
			NOTE PERFORM THE FOLLOWING 2 STEPS IF C&C CPU UTILIZATION IS NOT THE ACTIVE DATA DUMP.	
115-011	KCDH	SSFE	CES MATE MEIT3_MATE_ACT_CMDS INDEX: 0X013C CMD: START DATA DUMP COMMAND PUI: LADD96IM0522K OPS: PRIM CCS START DATA DUMP TMPLT APID: 10 LDP:10 DUMP TYPE : NORMAL DUMP LENGTH: 86 MEMORY ADDRESS : 0X7DD138 GMT _____:_____:_____ (HR:MIN:SEC)	

RELEASED - Printed documents may be obsolete; validate prior to use.

SECTION IV - OPERATION INSTRUCTIONS

SEQ/STEP	CMD	RESP	DESCRIPTION	VERIF.
115-012	KCDH		TCMS (DUMP) VERIFY CPU UTILIZATION DUMP IS ACTIVE WITH THE FOLLOWING PARAMETERS MEMORY ADDRESS : 0X7DD138	
			NOT PERFORMED:_____ (PREVIOUS 2 STEPS)	
			NOTE THE FOLLOWING TWO STEPS CONFIRM THAT RT FDIR AND RT I/O FOR ALL JEM RTS ON THE CB-EXT-1/2 BUSES ARE INHIBITED.	
115-013	KCDH	MS1	PCS JEM:JEM C&DH OVERVIEW:CB-EXT-1:RT STATUS ‘CB EXT 1 RT STATUS’ ‘RT FDIR STATUS’ RECORD 1. RT FDIR STATUS – INH (FOR THE FOLLOWING RTS) RT 15 JEM ZENITH CBM (PRI) _____ OPS: PRIM_CCS_CB_EXT_1_RT_FDIR_INH_CBM_JEM_PRIM_RT_15 PUI: LADP01MDAVXFJ RT 18 JEM DIU EPS1 _____ OPS: PRIM_CCS_CB_EXT_1_RT_FDIR_INH_JEM_DIU_1_RT_18 PUI: LADP01MDAVX6J RT 19 JCP A _____ OPS: PRIM_CCS_CB_EXT_1_RT_FDIR_INH_JCP_1_RT_19 PUI: LADP01MDAVWXJ	

RELEASED - Printed documents may be obsolete; validate prior to use.

SECTION IV - OPERATION INSTRUCTIONS

SEQ/STEP	CMD	RESP	DESCRIPTION	VERIF.
			'RT STATUS'	
			2. VERIFY/RECORD: RT STATUS – INH (FOR THE FOLLOWING RTS)	
			RT 15 JEM ZENITH CBM (PRI) _____ OPS: PRIM_CCS_CB_EXT_1_RT_ENA_CBM_JEM_PRIM_RT_1 5 PUI: LADP01MDAVXBJ	
			RT 18 JEM DIU EPS1 _____ OPS: PRIM_CCS_CB_EXT_1_RT_ENA_JEM_DIU_1_RT_18 PUI: LADP01MDAVX2J	
			RT 19 JCP_A _____ OPS: PRIM_CCS_CB_EXT_1_RT_ENA_JCP_1_RT_19 PUI: LADP01MDAVWTJ	

RELEASED - Printed documents may be obsolete; validate prior to use.

SECTION IV - OPERATION INSTRUCTIONS

SEQ/STEP	CMD	RESP	DESCRIPTION	VERIF.
115-014	KCDH	MS1	PCS JEM:JEM CDH:CB-EXT-2:RT STATUS 'RT FDIR STATUS' RECORD 1. RT FDIR STATUS – INH (FOR THE FOLLOWING RTS) 15 JEM ZENITH CBM (SEC) _____ OPS: PRIM_CCS_CB_EXT_2_RT_FDIR_INH_CBM_JEM_SEC_RT_15 PUI: LADP01MDAVV6J 16 JEM RMS MDP _____ OPS: PRIM_CCS_CB_EXT_2_RT_FDIR_INH_JEM_RMS_RT_16 PUI: LADP01MDAVVFJ 18 JEM DIU EPS2 _____ OPS: PRIM_CCS_CB_EXT_2_RT_FDIR_INH_JEM_DIU_2_RT_18 PUI: LADP01MDAVUXJ 19 JCP B _____ OPS: PRIM_CCS_CB_EXT_2_RT_FDIR_INH_JCP_2_RT_19 PUI: LADP01MDAVUOJ	

RELEASED - Printed documents may be obsolete; validate prior to use.

SECTION IV - OPERATION INSTRUCTIONS

SEQ/STEP	CMD	RESP	DESCRIPTION	VERIF.

'RT STATUS'

RECORD

2. VERIFY RT STATUS – INH (FOR THE FOLLOWING RTS)

15 JEM ZENITH CBM (SEC) _____
OPS:
PRIM_CCS_CB_EXT_2_RT_ENA_CBM_JEM_SEC_RT_15
PUI: LADP01MDAVV2J

16 JEM RMS MDP _____
OPS:
PRIM_CCS_CB_EXT_2_RT_ENA_JEM_RMS_RT_16
PUI: LADP01MDAVVBJ

18 JEM DIU EPS2 _____
OPS:
PRIM_CCS_CB_EXT_2_RT_ENA_JEM_DIU_2_RT_18
PUI: LADP01MDAVUTJ

19 JCP B _____
OPS: PRIM_CCS_CB_EXT_2_RT_ENA_JCP_2_RT_19
PUI: LADP01MDAVUKJ

RELEASED - Printed documents may be obsolete; validate prior to use.

SECTION IV - OPERATION INSTRUCTIONS

SEQ/STEP	CMD	RESP	DESCRIPTION	VERIF.
			NOTE ONCE THE ISOLATION SWITCH IS CLOSED THE FOLLOWING BOXES WILL HAVE POWER APPLIED PDU-A1, PDU-A2, PDB-EPS1, DIU-EPS-A, DIU-A1, PIB-A1.	
			NOTE JEM ON ORBIT THERMAL CONSTRAINTS ARE NOT APPLICABLE DUE TO GROUND COOLING CONFIGURATION.	
115-015	KEPS	DET1 DKQN	CLOSE MANUAL SWITCH FOR JEM A POWER STRING.	

TNW:_____

RELEASED - Printed documents may be obsolete; validate prior to use.

SECTION IV - OPERATION INSTRUCTIONS

SEQ/STEP	CMD	RESP	DESCRIPTION	VERIF.

ENABLE COM BETWEEN C&C MDM AND DIU-EPS-1

NOTE

THE DIU MDM RT I/O PORTION OF OMRSD A3000MI.100-E (CDH DIU EPS 1) WILL NOT BE SATISFIED UNTIL AFTER THE JCP IS ACTIVATED.

115-016 KCDH MS1

PCS
TASK:JPM CONTINGENCY CH A INIT ACT
'JPM CONTINGENCY CHANNEL A INITIAL ACTIVATION'

'DIU EPS 1'

1. CMD: RT I/O – ENABLE
   OPS: (PRIM_CCS_ENA_RT_TMPLT)
   PUI: LADD96IM1018K

   GMT _____:_____:_____ (HR:MIN:SEC)

VERIFY:

2. RT I/O – ENA
   OPS:
   PRIM_CCS_CB_EXT_1_RT_ENA_JEM_DIU_1_RT_18
   PUI: LADP01MDAVX2J

3. DATA FRAME COUNTER - "INCREMENTING"
   ENG: DIU-III-A STATUS/DISCRETE INPUT DATAFRAME TIME TAG
   PUI: JMDC03FC0011W

4. BIT STATUS –VALID
   ENG: EPS_RACK1_DIU BIT STATUS [ACT]
   PUI: JMDC03FCA10EJ

5. BIT RESULT – NORMAL
   ENG: EPS_RACK1_DIU BIT RESULT [ACT]
   PUI: JMDC03FCA10FJ

6. HEALTH STATUS - NORMAL
   ENG: EPS_RACK1_DIU MONITOR STATUS [ACT]
   PUI: JMDC03FCA101J

~OMRSD A3000MI.100-E (PARTIAL CDH DIU EPS1)

RELEASED - Printed documents may be obsolete; validate prior to use.

SECTION IV - OPERATION INSTRUCTIONS

SEQ/STEP	CMD	RESP	DESCRIPTION	VERIF.
115-017	KCDH		TCMS (DIU_EPS1 PRE JCP-ACT DISPLAY) VERIFY: 1. ENG: EPS_RACK1_DIU HEALTH STATUS SUMMARY [ACT] - NORMAL PUI: JMDC03FCA100J 2. ENG: EPS_RACK_1_DIU_NIA_BUS_ACCESS_TIMEOUT_[ACT] – NORMAL PUI: JMDC03FCA119J 3. ENG:EPS_RACK 1 DIU ADX A/D CONVERTER TIMEOUT [ACT]- NORMAL PUI: JMDC03FCA11AJ 4. ENG:EPS_RACK1_DIU_MPU_HALT [ACT]- NORMAL PUI: JMDC03FCA11BJ 5. ENG:EPS_RACK1_DIU_MPU PARITY ERROR [ACT]- NORMAL PUI: JMDC03FCA11CJ 6. ENG:EPS_RACK1_DIU RAM ECC ERROR [ACT]- NORMAL PUI: JMDC03FCA11DJ 7. ENG:EPS_RACK1_DIU ROM ECC ERROR [ACT]- NORMAL PUI: JMDC03FCA11EJ 8. ENG: EPS_RACK1_DIU SW120_8S BUS ACCESS TIMEOUT [ACT]- NORMAL PUI: JMDC03FCA10ZJ 9. ENG:EPS_RACK1_DIU AOX BUS ACCESS TIMEOUT [ACT] – NORMAL PUI: JMDC03FCA115J 10. ENG:EPS_RACK1_DIU ADX BUS ACCESS TIME0UT [ACT]- NORMAL PUI: JMDC03FCA114J 11. ENG:EPS_RACK1_DIU AIX1 BUS ACCESS TIMEOUT [ACT] – NORMAL PUI: JMDC03FCA117J 12. ENG: EPS RACK1_DIU DOX16P16A BUS ACCESS TIMOUT [ACT] –NORMAL PUI: JMDC03FCA11HJ	

RELEASED - Printed documents may be obsolete; validate prior to use.

SECTION IV - OPERATION INSTRUCTIONS

SEQ/STEP	CMD	RESP	DESCRIPTION	VERIF.
			13. ENG: EPS_RACK1_DIU DIA BUS ACCESS TIMOUT [ACT]- NORMAL PUI: JMDC03FCA112J	
			14. ENG:EPS_RACK1_DIU SIO BUS ACCESS TIMOUT [ACT]- NORMAL PUI: JMDC03FCA118J	
			ENABLE FDIR BETWEEN C&C MDM AND DIU-EPS-1	
115-018	KCDH	MS1	PCS TASK: JPM CONTINGENCY CH A INIT ACT 'JPM CONTINGENCY CHANNEL A INITIAL ACTIVATION' 'DIU EPS 1' 1. CMD: RT-FDIR - ENABLE OPS: PRIM_CCS_ENA_RT_FDIR_TMPLT PUI: LADD96IM0769K GMT _____:_____:_____ (HR:MIN:SEC) 2. VERIFY: RT-FDIR – ENA OPS: PRIM_CCS_CB_EXT_1_RT_FDIR_INH_JEM_DIU_1_RT_18 PUI: LADP01MDAVX6J	
			VERIFY JCP A TEMP	
115-019	KCDH	MS1	PCS TASK:JPM CONTINGENCY CH A INIT ACT 'JPM CONTINGENCY CHANNEL A INITIAL ACTIVATION' 'JCP A TEMPERATURES' RECORD: 1. MPC/BIC TEMP 1 _____DEGREES C (<35 DEGREES C) ENG: JCP_A MPC/BIC1 TEMP [ACT] PUI: JMDC03FCZA00T 2. MPC/BIC TEMP 2 _____DEGREES C (<35 DEGREES C) ENG: JCP_A MPC/BIC2 TEMP [ACT] PUI: JMDC03FCZA01T	

RELEASED - Printed documents may be obsolete; validate prior to use.

SECTION IV - OPERATION INSTRUCTIONS

SEQ/STEP	CMD	RESP	DESCRIPTION	VERIF.

ESTABLISH COM BETWEEN DIU-EPS-1 AND PDU-A1

115-020 KCDH MS1 PCS
TASK:JPM CONTINGENCY CH A INIT ACT

'JPM CONTINGENCY CHANNEL A INITIAL ACTIVATION'

'PDU-A1'

1. CMD: DIU EPS1/PDU A1 COMM - START
   OPS:
   JPM_CDH_DIU_A4/PDU_A1_(RS422_CH5)_COMM_START_(ACT)
   PUI: LADD96IM1070K

   GMT _____:_____:_____ (HR:MIN:SEC)

2. VERIFY: DATA FRAME COUNTER –
   "INCREMENTING"
   ENG: SYS_PDU_A DATA FRAME TIME TAG [ACT]
   PUI: JMDC03FC0081W

NOTE

HEALTH STAT SUMMARY MAY READ 'ERROR' UPON INITIAL POWERUP BUT WILL AUTOMATICALLY RESET WITHIN A FEW SECONDS.

3. VERIFY: HEALTH STATUS SUMMARY – NORMAL
   ENG: SYS_PDU_A HEALTH STATUS SUMMARY [ACT]
   PUI: JMDC03FCPH00J

~OMRSD A3000MI.100-E (EPS PDU A1)

RELEASED - Printed documents may be obsolete; validate prior to use.

SECTION IV - OPERATION INSTRUCTIONS

SEQ/STEP	CMD	RESP	DESCRIPTION	VERIF.
115-021	KEPS		TCMS PRE-JCP:JEM EPS SYS LOC BUS1: AV STR A 'PDU A1' RECORD: 1. INPUT VOLTAGE RPC1-7 _____ (BD) ENG: SYS_PDU_A RPCM(RPC1-7) INPUT VOLTAGE [ACT] PUI: JMDC03FCPH1ZV 2. INPUT VOLTAGE RPC8-14 _____ (BD) ENG: SYS_PDU_A RPCM(RPC8-14) INPUT VOLTAGE [ACT] PUI: JMDC03FCPH20V **ACTIVATE HCTL_A**	
115-022	KEPS	SSFE	CES MATE LOAD AND RUN MATE SCRIPT MEIT3_MATE_ACT_CMDS INDEX: 0X0028 CMD: PDU_A1_RPC14_- CLOSE OPS: JPM_EPS_PDU_A1_RPC14_(HCTL_A)_CL_(ACT) PUI: LAPX96IM0374K GMT _____:_____:_____ (HR:MIN:SEC)	
115-023	KEPS		TCMS (DMON) VERIFY: PDU A1 RPC14 POSN - CL ENG: SYS_PDU_A RPC14 POWER STATUS [ACT] PUI: JMDC03FCPH0TJ	

RELEASED - Printed documents may be obsolete; validate prior to use.

SECTION IV - OPERATION INSTRUCTIONS

SEQ/STEP	CMD	RESP	DESCRIPTION	VERIF.
115-024	KEPS	MS1	PCS TASK:JPM CONTINGENCY CH A INIT ACT 'JPM CONTINGENCY CHANNEL A INITIAL ACTIVATION' 'HTCL A' 1. CMD: DIU_EPS1/ HCTL_A COMM - START OPS: JPM_CDH_DIU_A4/HCTL_A(RS422_CH4)_COMM_STA RT_(ACT) PUI: LADD96IM1069K GMT _____:_____:_____ (HR:MIN:SEC) VERIFY: 2. DATA FRAME COUNTER - INCREMENTING PUI: JMDC03FC0071W ENG: PM_HCTL_A DATA FRAME TIME TAG 3. HEALTH STATUS SUMMARY - NORMAL PUI: JMDC03FCT300J ENG: PM_HCTL_A HEALTH STATUS SUMMARY [ACT] **DEACTIVATE HCTL A**	
115-025	KEPS	MS1	PCS TASK:JPM CONTINGENCY CH A INIT ACT 'JPM CONTINGENCY CHANNEL A INITIAL ACTIVATION' 'HCTL_A' 1. CMD: DIU_EPS1/ HCTL_A COMM STOP OPS: JPM_CDH_DIU_A4/HCTL_A_(RS422_CH4)_COMM_ST OP_(ACT) PUI: LADD96IM1074K GMT _____:_____:_____ (HR:MIN:SEC) VERIFY: 2. DATA FRAME COUNTER – "NOT INCREMENTING" ENG: PM_HCTL_A DATA FRAME TIME TAG PUI: JMDC03FC0071W	

RELEASED - Printed documents may be obsolete; validate prior to use.

SECTION IV - OPERATION INSTRUCTIONS

SEQ/STEP	CMD	RESP	DESCRIPTION	VERIF.
115-026	KEPS	SSFE	CES MATE LOAD AND RUN MATE SCRIPT MEIT3_MATE_ACT_CMDS INDEX: 0X0029 CMD: PDU_A1_RPC14_OP_(HCTL_A)_ACT OPS: JPM_EPS_PDU_A1_RPC14_(HCTL_A)_OP_(ACT) PUI: LAPX96IM0375K GMT _____:_____:_____ (HR:MIN:SEC)	
115-027	KEPS		TCMS (DMON) VERIFY: PDU A1 RPC14 PWR STATUS - OP ENG: SYS_PDU_A RPC14 POWER STATUS [ACT] PUI: JMDC03FCPH0TJ **ESTABLISH COM BETWEEN DIU-EPS-1 AND PIB-A1**	
115-028	KEPS	MS1	PCS TASK:JPM CONTINGENCY CH A INIT ACT 'JPM CONTINGENCY CHANNEL A INITIAL ACTIVATION' 'PIB A1' 1. CMD:DIU EPS1/PIB A1 COMM - START OPS: JPM_CDH_DIU_A4/PIB_A1_(RS422_CH3)_COMM_STA RT_(ACT) PUI: LADD96IM1068K GMT _____:_____:_____ (HR:MIN:SEC) VERIFY: 2. DATA FRAME COUNTER - "INCREMENTING" ENG: PIB_A1 DATA FRAME TIME TAG) PUI: JMDC03FC0061W 3. BIT STATUS – VALID ENG: PIB_A1 BIT STATUS [ACT] PUI: JMDC03FCPC39J 4. BIT RESULT - NORMAL ENG: PIB_A1 BIT RESULT [ACT] PUI: JMDC03FCPC3AJ 5. HEALTH STAT SUMM - NORMAL. ENG: PIB_A1 HEALTH STATUS SUMMARY [ACT] PUI: JMDC03FCPC00J ~OMRSD A3000MI.100-E (EPS PIB A1)	

RELEASED - Printed documents may be obsolete; validate prior to use.

SECTION IV - OPERATION INSTRUCTIONS

SEQ/STEP	CMD	RESP	DESCRIPTION	VERIF.

ACTIVATE PDB TCS 1

115-029 KEPS MS1 PCS
TASK:JPM CONTINGENCY CH A INIT ACT:JPM LTL ACTIVATION
'JPM LTL ACTIVATION'
'PDB TCS1'

1. CMD: PDU A1 RPC6 POSN – CLOSE
   OPS:
   JPM_EPS_PDU_A1_RPC06_(PDB_A_TCS1)_CL_(ACT)
   PUI: LAPX96IM0371K

   GMT _____:_____:_____ (HR:MIN:SEC)

2. VERIFY: PDU A1 RPC6 POSN – CL
   ENG: SYS_PDU_A RPC6 POWER STATUS [ACT]
   PUI: JSDC00FCPH0LJ

ENABLE COMM BETWEEN DIU EPS 1 AND PDB TCS 1

115-030 KEPS MS1 PCS
KCDH TASK:1J:JPM CONTINGENCY CH A INIT ACT:JPM LTL ACTIVATION
'JPM LTL ACTIVATION'
'PDB TCS 1'

1. CMD: 'DIU EPS1/PDB TCS1 COMM – START
   OPS:
   JPM_CDH_DIU_A4/PDB_A_TCS1_(RS422_CH2)_COMM
   START(ACT)
   PUI: LADD96IM1067K

   GMT _____:_____:_____ (HR:MIN:SEC)

VERIFY:

2. DATA FRAME COUNTER – "INCREMENTING"
   ENG: PDB_TCS1 DATA FRAME TIME TAG
   PUI: JMDC03FC0051W

3. HEALTH STATUS SUMM - NORMAL
   ENG: PDB_TCS1 HEALTH STATUS SUMMARY [ACT]
   PUI: JMDC03FCP900J

RELEASED - Printed documents may be obsolete; validate prior to use.

SECTION IV - OPERATION INSTRUCTIONS

SEQ/STEP	CMD	RESP	DESCRIPTION	VERIF.
			LTL A ACTIVATION AND CONFIGURATION	
115-031	PTC	KTCS	READY TO BEGIN JEM LTL INITIAL ACTIVATION. RECORD GMT _____:_____:_____ (DAY:HR:MIN)	
			APPLY POWER TO PUMP INVERTER	
115-032	KTCS	MS1	PCS TASK: JPM CONTINGENCY CHANNEL A INITIAL ACTIVATION:JPM LTL ACTIVATION 'JPM LTL ACTIVATION' 'TCA L' CMD: PDB TCS1 RPC4 (PUMP INV) POSN – CLOSE ENG: JPM_EPS_PDB_A_TCS1_RPC04_(TCA_L_PUMP_A_INV)_CL_ACT PUI: LADD96IM1133K GMT _____:_____:_____ (HR:MIN:SEC)	
115-033	KTCS	MS1	PCS TASK: JPM CONTINGENCY CHANNEL A INITIAL ACTIVATION:JPM LTL ACTIVATION 'JPM LTL ACTIVATION' 'TCA L' VERIFY: PDB TCS1 RPC 4 (PUMP INV) POSN – CL OPS: PDB_TCS1 RPC4 POWER STATUS [ACT] PUI: JMDC03FCP90FJ	
			APPLY POWER TO MTL TCV A	
115-034	KTCS	MS1	PCS TASK: JPM CONTINGENCY CHANNEL A INITIAL ACTIVATION:JPM LTL ACTIVATION 'JPM LTL ACTIVATION' 'MTL TCV A' 1. CMD PIB A1 120V L SW6 POSN – CLOSE OPS: JPM_EPS_PIB_A1_120V_L_SW06_ (TCA_L_MTL_TWMV_A)_CL_(ACT) PUI: LAPX96IM0317K GMT _____:_____:_____ (HR:MIN:SEC) 2. VERIFY PIB A1 120V L SW6 POSN – CL ENG: PIB_A1 120V_L SW6 POWER STATUS [ACT] PUI: JMDC03FCPC25J	

RELEASED - Printed documents may be obsolete; validate prior to use.

SECTION IV - OPERATION INSTRUCTIONS

SEQ/STEP	CMD	RESP	DESCRIPTION	VERIF.
			ACTIVATE TAC A/TCA L	
			NOTE	
			TAC-L TAKES 2 MINUTES FOR BIT.	
			APPLY POWER TO TCA L TAC	
115-035	KTCS	MS1	PCS TASK: JPM CONTINGENCY CHANNEL A INITIAL ACTIVATION:JPM LTL ACTIVATION 'JPM LTL ACTIVATION' 'TCA L TAC' CMD: PDB TCS1 RPC2 POSN – CLOSE ENG: JPM_EPS_PDB_A_TCS1_RPC02_(TCA_L_TAC_A)_CL_(ACT) PUI: LADD96IM1135K GMT _____:_____:_____ (HR:MIN:SEC)	
115-036	KTCS	MS1	PCS TASK:1J:JPM CONTINGENCY CHANNEL A INITIAL ACTIVATION:JPM LTL ACTIVATION 'JPM CONTINGENCY LTL ACTIVATION' 'TCA L TAC' VERIFY: 1. PDB TCS 1 RPC 2 POSN– CL ENG: PDB_TCS1 RPC2 POWER STATUS [ACT] PUI: JMDC03FCP90DJ 2. WAIT ~2 MINUTES FOR BIT TO COMPLETE	

RELEASED - Printed documents may be obsolete; validate prior to use.

SECTION IV - OPERATION INSTRUCTIONS

SEQ/STEP	CMD	RESP	DESCRIPTION	VERIF.

NOTE

EPS1_DIU HEALTH STATUS SUMMARY MAY INDICATE "ERROR" AND EPS1_DIU RS422 PORT6 SMPL ERROR MAY INDICATE "ABNORMAL" WHEN THE FOLLOWING STEP PERFORMS BEFORE TAC-L BIT FINISH BECAUSE THE COMMUNICATION BETWEEN JCP AND TAC-L CAN NOT ESTABLISH DURING TAC-L BIT.

NOTE

TCA_L HEALTH STATUS SUMMARY MAY INDICATE "ERROR" AND TCA_L MTL CNTRL TEMP STATUS MAY INDICATE "ABNORMAL" IF COOLANT TEMPERATURE IS OUT OF NORMAL RANGE(13-22 DEG C). THIS IS FOR INFORMATION ONLY.

NOTE

TCA_L HEALTH STATUS SUMMARY MAY INDICATE "ERROR" AND TCA_L LTL CNTRL TEMP STATUS MAY INDICATE "ABNORMAL" IF COOLANT TEMPERATURE IS OUT OF NORMAL RANGE(1-8 DEG C). THIS IS FOR INFORMATION ONLY.

NOTE

DATA FRAME COUNTER WILL INCREMENT AFTER TAC POWER ON BIT IS COMPLETED (MAY TAKE UP TO 2 MINUTES).

ENABLE COMM BETWEEN DIU EPS 1 AND TCA_L

115-037 KTCS MS1 PCS
TASK:JPM CONTINGENCY CHANNEL A INITIAL ACTIVATION:JPM LTL ACTIVATION
'JPM LTL ACTIVATION'

'TCA L TAC'

1. CMD: DIU EPS 1/TCA L TAC COMM – START
   OPS:
   JPM_CDH_DIU_A4/TCA_L_TAC_A_(RS422_CH6)_
   COMM_START_(ACT)
   PUI: LADD96IM1077K

   GMT _____:_____:_____ (HR:MIN:SEC)

RELEASED - Printed documents may be obsolete; validate prior to use.

SECTION IV - OPERATION INSTRUCTIONS

SEQ/STEP	CMD	RESP	DESCRIPTION	VERIF.
			VERIFY: 2. DATA FRAME COUNTER – “INCREMENTING” ENG: TCA_L DATA FRAME TIME TAG PUI: JMDC03FC0091W 3. PWR ON BIT RESULT – NORMAL ENG: TCA_L TAC POWER_ON BIT RESULT [ACT] PUI: JMDC03FCTA0NJ 4. HEALTH STATUS – NORMAL ENG: TCA_L TAC HEALTH STATUS [ACT] PUI: JMDC03FCTA0CJ 5. TEMP STATUS – NORMAL ENG: TCA_L TAC TEMP STATUS [ACT] PUI: JMDC03FCTA13J ‘TCA L PUMP’ 6. TEMP STATUS – NORMAL ENG: TCA_L PUMP INVERTER TEMP STATUS [ACT] PUI: JMDC03FCTA14J	
115-038	KTCS		TCMS RECORD TAC L HEALTH STATUS SUMMARY:_____(BD) ENG: TCA_L HEALTH STATUS SUMMARY [ACT] PUI: JMDC03FCTA05J	
115-039	KTCS	MS1	PCS TASK:JPM CONTINGENCY CHANNEL A INITIAL ACTIVATION:JPM LTL ACTIVATION ‘JPM LTL ACTIVATION’ RECORD AND VERIFY THE FOLLOWING PARAMETERS: ‘TCA L ACCUMULATOR TELEMETRY’	

NOMENCLATURE	ACTUAL VALUE	EXPECTED VALUE	PUI
WATER VOLUME 1		0.66-4.7 L	JMDC03FCTA02Q
WATER VOLUME 2		0.66-4.7 L	JMDC03FCTA03Q
WATER PRESS 1		<282 KPA	JMDC03FCTA00P
WATER PRESS 2		<282 KPA	JMDC03FCTA01P

RELEASED - Printed documents may be obsolete; validate prior to use.

SECTION IV - OPERATION INSTRUCTIONS

SEQ/STEP	CMD	RESP	DESCRIPTION	VERIF.

RECONFIGURE GSE LOOP - JEM A STRING ACTIVATION (JCP-A PRIMARY)

> **CAUTION**
>
> TCA L PUMP MUST ACTIVATE WITHIN 10 MINUTES AFTER GSE PUMP DEACTIVATION. THE FOLLOWING 8 STEPS ARE TIME CRITICAL AND MUST BE PERFORMED AS QUICKLY AS POSSIBLE TO PREVENT HARDWARE DAMAGE.

115-040 KTCS TLM STOP MTL COOLANT FROM RESOURCE SUPPLY EQUIPMENT. REPORT COMPLETE.

GMT _____:_____:_____ (DAY:HR:MIN)

> **CAUTION**
>
> NEVER OPEN TCA-L/M ACCUMULATOR INLET VALVE (SOV, MV, RV) DURING GSE PUMP CIRCULATION TO AVOID HARDWARE DAMAGE.

115-041 KTCS TLM RECONFIGURE MTL COOLING GSE FROM GSE PUMP MODE TO FLIGHT PUMP MODE AS FOLLOWS:

1. DISCONNECT QD A/B COUPLING PER FIGURE 1.
2. DISCONNECT QD C/D COUPLING PER FIGURE 1.
3. CONNECT QD B/C COUPLING PER FIGURE 1.
4. REPORT COMPLETE.

115-042 KTCS TLM MANUALLY POSITION TCA_M MTL THERMAL CONTROL VALVE POSITON TO PORT A(BYPASS). REPORT COMPLETE.

TAG NO.	NOMENCLATURE	POSITION
MV1252	TCA_M MTL THERMAL CONTROL VALVE	PORT A (BYPASS)

RELEASED - Printed documents may be obsolete; validate prior to use.

SECTION IV - OPERATION INSTRUCTIONS

SEQ/STEP	CMD	RESP	DESCRIPTION	VERIF.

CONFIGURE ACCUMULATOR SOV

CAUTION

ACCUMULATOR SHUT OFF VALVE CANNOT BE ACTIVE (OPEN) FOR MORE THAN 5 MINUTES WITHOUT COOLING. THE FOLLOWING 6 STEPS ARE TIME CRITICAL AND MUST BE PERFORMED AS QUICKLY AS POSSIBLE TO PREVENT HARDWARE DAMAGE.

NOTE

DUE TO THE TIME CONSTRAINT IN THE FOLLOWING STEPS A SECOND PCS WILL BE SHADOWING THE DISPLAY NAVIGATION FOR A SECONDARY COMMAND AND TELEMETRY SOURCE.

NOTE

ALL PERSONNEL BE FAMILIAR WITH THE FOLLOWING STEPS, NOTES AND CAUTIONS IN THE TIME CRITICAL WINDOW. BE AWARE OF THE NESTED TIME CRITICAL CAUTIONS AND TIME CONSTRAINTS.

115-043 KTCS MS1 PCS
TASK: JPM CONTINGENCY CHANNEL A INITIAL ACTIVATION:JPM LTL ACTIVATION
'JPM LTL ACTIVATION'

'TCA L ACCUMULATOR'

1. CMD INLET VALVE POSN – OPEN
   OPS: JPM_ATCS_TCA_L_ACCUM_SOV_A_OP_(ACT)
   PUI: LATX96IM0120K

   GMT _____:_____:_____ (HR:MIN:SEC)

2. VERIFY INLET VALVE POSN – OP
   ENG: TCA_L ACCUMULATOR INLET VALVE POSTN [ACT]
   PUI: JMDC03FCTA1YJ

RELEASED - Printed documents may be obsolete; validate prior to use.

SECTION IV - OPERATION INSTRUCTIONS

SEQ/STEP	CMD	RESP	DESCRIPTION	VERIF.

115-044 KTCS TCMS

RECORD AND VERIFY THE FOLLOWING PARAMETERS:

NOMENCLATURE	ACTUAL VALUE	EXPECTED VALUE	PUI
WATER VOLUME 1		0.66-4.7 L	JMDC03FCTA02Q
WATER VOLUME 2		0.66-4.7 L	JMDC03FCTA03Q
WATER PRESS 1		<282 KPA	JMDC03FCTA00P
WATER PRESS 2		<282 KPA	JMDC03FCTA01P

SET TCA L MTL TCV CONTROL PARAMETERS

115-045 KTCS MS1 PCS
TASK:JPM CONTINGENCY CHANNEL A INITIAL
ACTIVATION:JPM LTL ACTIVATION
'JPM LTL ACTIVATION'

'MTL TEMP'

VERIFY: MTL TEMP LWR LIM SETPOINT – 13.0 C
ENG: TCA_L MTL_TEMP_LOWER_LIMIT_VALUE [ACT]
PUI: JMDC03FCTA17T

RELEASED - Printed documents may be obsolete; validate prior to use.

SECTION IV - OPERATION INSTRUCTIONS

SEQ/STEP	CMD	RESP	DESCRIPTION	VERIF.
115-046	KTCS	MS1	PCS JPM:TASK:JPM CONTINGENCY CH A INIT ACT:JPM LTL ACTIVATION “JPM LTL ACTIVATION” ‘MTL TEMP’ 1. CMD MTL TEMP CNTRL PARAM - SET OPS: MTL_TCA_L_PARAM_SEND_ACT_B_TMPLT PUI: LATX96IM0168K **NOTE:** PARAMETERS FOR INFORMATION PARAMETER 1: 00H PARAMETER 2: 40H PARAMETER 3: 31H PARAMETER 4: 64H PARAMETER 5: 7FH PARAMETER 6: 32H PARAMETER 7: 28H PARAMETER 8: 3CH PARAMETER 9: 95H PARAMETER 10: 1EH PARAMETER 11: 64H PARAMETER 12: 78H GMT _____:_____:_____ (HR:MIN:SEC) 2. VERIFY MTL TEMP LWR LIM SETPOINT – 12.9 C ENG: TCA_L MTL_TEMP_LOWER_LIMIT_VALUE [ACT] PUI: JMDC03FCTA17T	

RELEASED - Printed documents may be obsolete; validate prior to use.

SECTION IV - OPERATION INSTRUCTIONS

SEQ/STEP	CMD	RESP	DESCRIPTION	VERIF.
115-047	KTCS		TCMS VERIFY: 1. TCA_L MTL_TEMP_CNTRL_TARGET_VALUE [ACT] - 17.2 C PUI: JMDC03FCTA1FT 2. TCA_L MTL_TEMP_UPPER_LIMIT_VALUE [ACT] - 22.0 C PUI: JMDC03FCTA1GT 3. TCA_L MTL_TEMP_SENSOR_DIFFERENCE_LIMIT_VALUE [ACT] - 3.0 C PUI: JMDC03FCTA18T	
115-048	KTCS	MS1	PCS JPM:TASK:JPM CONTINGENCY CH A INIT ACT:JPM LTL ACTIVATION 'MTL TEMP' MTL TEMP SNSR HEALTH STATUS - NORMAL PUI: JMDC03FCTA0GJ **START TCA_L PRESS CONTROL**	
115-049	KTCS	SSFE	CES MATE LOAD AND RUN MATE SCRIPT MEIT3_MATE_ACT_CMDS INDEX: 0X0033 CMD ACTIVATE PRESSURE CONTROL ALGORITHM OPS: JPM_ATCS_TCA_L_PUMP_A_IN_PRESS_CNTL_START_(ACT) PUI: LATX96IM0125K GMT _____:_____:_____ (HR:MIN:SEC)	

RELEASED - Printed documents may be obsolete; validate prior to use.

SECTION IV - OPERATION INSTRUCTIONS

SEQ/STEP	CMD	RESP	DESCRIPTION	VERIF.

115-050 KTCS TCMS

VERIFY:

1. TCA_L LTL PRESS CNTRL EXECUTING STATUS [ACT] - EXECUTING
   PUI: JMDC03FCTA0MJ

2. TCA_L LTL MIN PRESS STATUS [ACT] - NORMAL
   PUI: JMDC03FCTA07J

VERIFY CRITICAL STARTUP PARAMETERS

115-051 KTCS TCMS

RECORD AND VERIFY THE FOLLOWING PARAMETERS:

NOMENCLATURE	ACTUAL VALUE	EXPECTED VALUE	PUI
WATER VOLUME 1		0.66-4.7 L	JMDC03FCTA02Q
WATER VOLUME 2		0.66-4.7 L	JMDC03FCTA03Q
WATER PRESSURE 1		134-282.1 KPA	JMDC03FCTA00P
WATER PRESSURE 2		106.9-282.1 KPA	JMDC03FCTA01P

RELEASED - Printed documents may be obsolete; validate prior to use.

SECTION IV - OPERATION INSTRUCTIONS

SEQ/STEP	CMD	RESP	DESCRIPTION	VERIF.

ACTIVATE LTL PUMP

NOTE

TCA_L HEALTH STATUS SUMMARY MAY INDICATE "ERROR" AND TCA_L LTL MIN PRESS STATUS MAY INDICATE "ABNORMAL" FOR PUMP ACTIVATION. THIS IS FOR INFORMATION.

115-052 KTCS MS1 PCS
TASK: JPM CONTINGENCY CHANNEL A INITIAL ACTIVATION:LTL ACTIVATION
'JPM LTL ACTIVATION'

'TCA L PUMP'

1. CMD OPERATION – START
   OPS: JPM_ATCS_TCA_L_PUMP_A_START_(ACT)
   PUI: LATX96IM0116K

   GMT _____:_____:_____ (HR:MIN:SEC)

VERIFY:

2. OPERATION – OPERATING
   ENG: TCA_L LTL EXECUTING STATUS [ACT]
   PUI: JMDC03FCTA0IJ

3. PUMP SPEED IS INCREASING

4. WAIT ~1 MINUTE FOR STABILIZATION

5. VERIFY HEALTH STATUS - NORMAL
   ENG: JPM_ATCS_TCA_L_PUMP_PKG_A_HEALTH_STAT_(ACT)
   PUI: JMDC03FCTA0DJ

6. VERIFY SPEED – 6430 +/- 329 RPM
   ENG: JPM_ATCS_TCA_L_PUMP_A_SPD_(ACT)
   PUI: JMDC03FCTA1WR

RELEASED - Printed documents may be obsolete; validate prior to use.

SECTION IV - OPERATION INSTRUCTIONS

SEQ/STEP	CMD	RESP	DESCRIPTION	VERIF.
			NOTE ACTIVATION OF THE TCA L PUMP IN THE PREVIOUS STEP ENDED THE TIME CRITICAL WINDOW. **NOTE:** THE FOLLOWING STEP WILL BE PERFORMED PER *NTC DIRECTION IF THE END OF THE TIME CRITICAL WINDOW IS APPROACHING AND THE FLIGHT PUMP HAS NOT BEEN ACTIVATED.	
115-053	*NTC	KTCS	PERFORM APPENDIX O TO DEACTIVATE LTL AND REACTIVATE GROUND COOLING. REPORT TIME COOLING IS RESTABLISHED: GMT _____:_____:_____ (DAY:HR:MIN) NOT PERFORMED:_____	
			ADJUST PUMP SPEED	
115-054	KTCS	MS1	PCS TASK: JPM CONTINGENCY CHANNEL A INITIAL ACTIVATION:LTL ACTIVATION 'JPM LTL ACTIVATION' 'TCA L PUMP' 1. ENTER: SPEED SET - 7000 RPM 2. CMD: SPEED SET – SET OPS: JPM_ATCS_TCA_L_PUMP_A_SPD_SET_(ACT)_TMPLT PUI: LATX96IM0158K GMT _____:_____:_____ (HR:MIN:SEC) 3. WAIT ~1 MINUTE FOR STABILIZATION 4. VERIFY: SPEED – 7000 +/-329 RPM ENG: TCA_L PUMP REV [ACT] PUI: JMDC03FCTA1WR	

RELEASED - Printed documents may be obsolete; validate prior to use.

SECTION IV - OPERATION INSTRUCTIONS

SEQ/STEP	CMD	RESP	DESCRIPTION	VERIF.
			SET TCA L LTL TCV CONTROL PARAMETERS	
115-055	KTCS	SSFE	CES MATE LOAD AND RUN MATE SCRIPT MEIT3_MATE_ACT_CMDS INDEX: 0X0038 CMD: SET TCA_L_LTL_PARAMETERS ENG: JPM_ATCS_TCA_L_LTL_TWMV_A_TEMP_CNTL_ PARAM_SET_(ACT)_TMPLT PUI: LATX96IM0165K PARAMETER 1: 00H PARAMETER 2: 40H PARAMETER 3: 31H PARAMETER 4: 27H PARAMETER 5: 7FH PARAMETER 6: 32H PARAMETER 7: 28H PARAMETER 8: 33H PARAMETER 9: 1EH PARAMETER 10: 1EH PARAMETER 11: 69H PARAMETER 12: 78H GMT _____:_____:_____ (HR:MIN:SEC)	
115-056	KTCS	MS1	TCMS VERIFY: 1. TCA_L LTL_TEMP_CNTRL_TARGET_VALUE [ACT] - 4.5 C PUI: JMDC03FCTA19T 2. TCA_L LTL_TEMP_UPPER_LIMIT_VALUE [ACT]- 8.1 C PUI: JMDC03FCTA1AT 3. TCA_L LTL_TEMP_LOWER_LIMIT_VALUE [ACT]- 1.0 C PUI: JMDC03FCTA1BT 4. TCA_L LTL_TEMP_SENSOR_DIFFERENCE_ LIMIT_VALUE [ACT] - 3.0 C PUI: JMDC03FCTA1CT 5. TCA_L LTL CNTRL TEMP SENSOR HEALTH STATUS [ACT] - NORMAL PUI: JMDC03FCTA0HJ	

RELEASED - Printed documents may be obsolete; validate prior to use.

SECTION IV - OPERATION INSTRUCTIONS

SEQ/STEP	CMD	RESP	DESCRIPTION	VERIF.

START TEMPERATURE CONTROL

NOTE

"EXECUTING" AND "OPERATING" ARE EQUIVALENT
FOR TEMPERATURE CONTROL MODE VERIFICATION
IN THE FOLLOWING STEP.

115-057 KTCS MS1 PCS
TASK: JPM CONTINGENCY CHANNEL A INITIAL ACTIVATION:LTL ACTIVATION

'JPM LTL ACTIVATION'

'MTL TEMP'

1. CMD TCA L MTL TEMP CNTL – START
   OPS: JPM_ATCS_TCA_L_MTL_TWMV_A_TEMP_CNTL_START_(ACT)
   PUI: LATX96IM0118K

   GMT _____:_____:_____ (HR:MIN:SEC)

VERIFY:

2. VERIFY CNTL STATE – OPERATING
   ENG: TCA_L MTL TEMP CNTRL EXECUTING STATUS [ACT]
   PUI: JMDC03FCTA0JJ

3. ALLOW SYSTEM ~10 MINUTES TO THERMALLY
   STABILIZE PRIOR TO PROCEEDING.

~OMRSD A3000MI.100-E (TCS-2)

RELEASED - Printed documents may be obsolete; validate prior to use.

SECTION IV - OPERATION INSTRUCTIONS

SEQ/STEP CMD RESP DESCRIPTION VERIF.

POST ACTIVATION VERIFICATIONS

NOTE:

IN THE FOLLOWING STEP, PUMP DIFF PRESS AND TOTAL FLOW SHALL BE VERIFIED BY KTCS AND NASDA ACCORDING TO APPENDIX M FIGURE M-2(TCA-L) IN APPENDIX-M

115-058 KTCS MS1 PCS
TASK: JPM CONTINGENCY CHANNEL A INITIAL ACTIVATION:JPM LTL ACTIVATION
'JPM LTL ACTIVATION'

RECORD/VERIFY THE FOLLOWING POST ACTIVATION PARAMETERS:

NOMENCLATURE	ACTUAL VALUE	EXPECTED VALUE	PUI
WATER VOLUME 1		0.66-4.7 L	JMDC03FCTA02Q
WATER VOLUME 2		0.66-4.7 L	JMDC03FCTA03Q
WATER PRESS 1		134-282.1 KPA	JMDC03FCTA00P
WATER PRESS 2		106.9-282.1 KPA	JMDC03FCTA01P
TCA L PUMP DP		IN OPERATIONAL RANGE (REF APPENDIX M FIGURE M-2) & >20 KPAD	JMDC03FCTA1VP
TCA L PUMP OUT FLOW RATE		IN OPERATIONAL RANGE (REF APPENDIX M FIGURE M-2)	JMDC03FCTA0ZR
TCA L TAC HEALTH STAT		NORMAL	JMDC03FCTA0CJ
TCA L PUMP HEALTH STAT		NORMAL	JMDC03FCTA0DJ

~OMRSD A3000MI.100-E (TCS-1)

RELEASED - Printed documents may be obsolete; validate prior to use.

SECTION IV - OPERATION INSTRUCTIONS

SEQ/STEP	CMD	RESP	DESCRIPTION	VERIF.
115-059	KTCS		TCMS VERIFY 1. TCA_L ACCUMULATOR HEALTH STATUS [ACT] - NORMAL PUI:JMDC03FCTA0EJ 2. TCA_L MTL CNTRL TEMP [ACT] – 13-22 C PUI: JMDC03FCTA0XT	
115-060	KTCS	PTC	JEM LTL INITIAL ACTIVATION COMPLETE. GMT _____:_____:_____ (DAY:HR:MIN) **VERIFYING JPM INTERNAL TEMP**	
115-061	KCDH	MS1	PCS TASK:JPM CONTINGENCY CH A INIT ACT ‘JPM CONTENGENCY CHANNEL A INITIAL ACTIVATION’ ‘JCP A TEMPERATURES’ RECORD: 1. MPC/BIC TEMP 1_____DEGREES C (<30 DEGREES C) ENG: JCP_A MPC/BIC1 TEMP [ACT] PUI: JMDC03FCZA00T 2. MPC/BIC TEMP 2 _____DEGREES C (<30 DEGREES C) ENG: JCP_A MPC/BIC2 TEMP [ACT] PUI: JMDC03FCZA01T	

RELEASED - Printed documents may be obsolete; validate prior to use.

SECTION IV - OPERATION INSTRUCTIONS

SEQ/STEP	CMD	RESP	DESCRIPTION	VERIF.

JCP-A ACTIVATION

CAUTION

THE JCP CANNOT BE POWERED ON IF THE TEMPERATURES ARE ABOVE 30 DEG C.

ENABLE COMM BETWEEN JCP A AND C&C MDM

115-062 KCDH MS1 PCS
TASK:JPM CONTINGENCY CH A INIT ACT:FAS MESSAGE

'JPM CONTINGENCY CHANNEL A INITIAL ACTIVATION'

OPEN FAS MESSAGE PAGE

NOTE

A COMM ERROR C&W MESSAGE IS EXPECTED AFTER THE NEXT STEP IS PERFORMED SINCE THE JCP-A IS NOT ACTIVATED. THE MESSAGE "CDH PRIMARY JEM CONTROL PROCESSOR FAIL – JEM" WILL OCCUR.

115-063 KCDH MS1 PCS
TASK:JPM CONTINGENCY CHANNEL A INITIAL ACTIVATION

'JCP A'

1. CMD: RT/IO – ENABLE
   OPS: (PRIM_CCS_ENA_RT_TMPLT)
   PUI: LADD96IM1018K

   GMT _____:_____:_____ (HR:MIN:SEC)

2. VERIFY: RT I/O – ENA
   OPS: PRIM_CCS_CB_EXT_1_RT_ENA_JCP_1_RT_19
   PUI: LADP01MDAVWTJ

   ~OMRSD A3000MI.100-E (PARTIAL CDH JCP A)

RELEASED - Printed documents may be obsolete; validate prior to use.

SECTION IV - OPERATION INSTRUCTIONS

SEQ/STEP	CMD	RESP	DESCRIPTION	VERIF.
			NOTE: AFTER ACTIVATION OF PDB DMS1 JCP A ACTIVATES AUTOMATICALLY.	
115-064	KEPS	MS1	PCS TASK:JPM CONTINGENCY CH A INIT ACT: JPM CONTINGENCY CHANNEL A INITIAL ACTIVATION 'PDB DMS1' 1. CMD: PDU A1 RPC 10 POSN – CLOSE PUI: JSPX96IM0746K OPS: JPM_EPS_PDU_A1_RPC10_(PDB_A_DMS1)_CL_(ACT) EXECUTE: GMT _____:_____:_____ (HR:MIN:SEC) 2. VERIFY: PDU A1 RPC10 POSN – CL PUI: JMDC03FCPH0PJ ENG: SYS_PDU_A RPC10 POWER STATUS [ACT]	

RELEASED - Printed documents may be obsolete; validate prior to use.

SECTION IV - OPERATION INSTRUCTIONS

SEQ/STEP	CMD	RESP	DESCRIPTION	VERIF.

NOTE

JCP A TAKES BETWEEN 5.5 AND 10 MINUTES TO INITIALIZE DEPENDING ON FILE CONFIGURATION. STEPS TO ESTABLISH COMMUNICATION BETWEEN C&C MDM AND JCP A CAN BE PERFORMED IMMEDIATELY AFTER VERIFICATION OF THE FOLLOWING STEP.

NOTE

AFTER JCP-A INT PWR SWITCH IS CLOSED, THE JCP A INITIATES A SELF TEST (BIT) WHICH TAKES APPROXIMATELY 60 SECONDS TO COMPLETE. DURING THE BIT , THE JCP A FATAL ERR WILL INDICATE “YES” . AFTER THE BIT IS COMPLETE, THE FATAL ERROR WILL RETURN TO “NO” DEPENDING ON TIMING OF THE RT I/O ENABLE COMMAND BETWEEN THE C&C AND JCP THIS FATAL ERROR MAY BE MONITORED.

VERIFY JCP A STATUS

115-065 KCDH MS1 PCS
TASK:JPM CONTINGENCY CH A INIT ACT

‘JPM CONTINGENCY CHANNEL A INITIAL ACTIVATION’

‘JCP A’

VERIFY:

1. INT PWR SW POSN – CL
   ENG: JCP_A SECONDARY POWER STATUS[ACT]
   PUI: JMDC03FCZA04J

2. FATAL ERR – NO
   ENG: JCP_A FAULT SIGNAL[ACT]
   PUI: JMDC03FCZA03J

~OMRSD A3000MI.100-E (PARTIAL CDH JCP A)

RELEASED - Printed documents may be obsolete; validate prior to use.

SECTION IV - OPERATION INSTRUCTIONS

SEQ/STEP	CMD	RESP	DESCRIPTION	VERIF.
			CHECKOUT JCP A	
			NOTE IT MAY TAKE UP TO 10 MINUTES TO PERFORM THE VERIFICATIONS IN THE FOLLOWING STEP.	
115-066	KCDH	MS1	PCS TASK:JPM CONTINGENCY CH A INIT ACT 'JPM CONTINGENCY CHANNEL A INITIAL ACTIVATION' 'JCP A' VERIFY: FRAME COUNT - "INCREMENTING" ENG: FRAME COUNTER PUI: JSDC00SWZ999U ~OMRSD A3000MI.100-E (PARTIAL CDH JCP A)	

RELEASED - Printed documents may be obsolete; validate prior to use.

SECTION IV - OPERATION INSTRUCTIONS

SEQ/STEP	CMD	RESP	DESCRIPTION	VERIF.

NOTE

FAS MESSAGE SERVICE TAKES A FEW MINUTES TO COMPLETE.

115-067 KCDH MS1 PCS
TASK:JPM CONTINGENCY CH A INIT ACT:FAS MESSAGE

'JCP FAS MESSAGE LOG'

VERIFY

1. JCP FAS MSG – FAS SERVICE STARTED
   ENG: MESSAGE ID BOX (TO SS PCS) 1
   PUI: JSDC00SWZ621J

2. JCP FAS MSG – 2278:FINISHED FAS0113
   (SYSTEM SETUP SEQUENCE JCP ACTIVATION)
   ENG: MESSAGE ID BOX (TO SS PCS) 1
   PUI: JSDC00SWZ621J

~OMRSD A3000MI.100-E (PARTIAL CDH JCP A)

115-068 KTCS MS1 PCS
JPM:TCS:LCA ICON
'JPM ATCS LCA'

'STATUS'

VERIFY: TCS MODE – A1WCL
PUI: JSDC00SWZ60IJ

~OMRSD A3000MI.100-E (TCS 3)

RELEASED - Printed documents may be obsolete; validate prior to use.

SECTION IV - OPERATION INSTRUCTIONS

SEQ/STEP	CMD	RESP	DESCRIPTION	VERIF.
			ENABLE BUS FDIR BETWEEN C&C MDM AND JCP A	
115-069	KCDH	MS1	PCS TASK:JPM CONTINGENCY CH A INIT ACT 'JPM CONTINGENCY CHANNEL A INITIAL ACTIVATION' 'JCP A' CMD: RT FDIR – ENABLE OPS: PRIM_CCS_ENA_RT_FDIR_TMPLT PUI: LADD96IM0769K GMT _____:_____:_____ (HR:MIN:SEC) VERIFY: RT FDIR – ENA OPS: PRIM_CCS_CB_EXT_1_RT_FDIR_INH_JCP_1_RT_19 PUI: LADP01MDAVWXJ **NOTE** ONCE JCP A IS ACTIVATED, SYSTEM DISPLAYS ARE VALID FOR COMMAND AND TELEMETRY. **JEM CHANNEL A FINAL ACTIVATION** **VERIFY COMMUNICATION STATUS BETWEEN JCP A AND DIU_EPS1**	
115-070	KCDH	MS1	PCS JPM:CDH:JEM SLB 1 'DIU EPS1' VERIFY: DI DF STATUS - CURRENT ENG: DIU_EPS1_DI DF STATUS PUI: JSDC00SWA120J ~OMRSD A3000MI.100-E (PARTIAL CDH DIU EPS1)	

RELEASED - Printed documents may be obsolete; validate prior to use.

SECTION IV - OPERATION INSTRUCTIONS

SEQ/STEP	CMD	RESP	DESCRIPTION	VERIF.
			INHIBIT FDIR C&C MDM AND DIU-EPS 1	
115-071	KCDH	MS1	PCS JPM:CDH OVERVIEW:CB EXT 1:RT STATUS 'CB EXT 1 RT STATUS' 1. CMD RT 18 JEM DIU EPS1 RT FDIR – INHIBIT FDIR OPS: PRIM_CCS_INH_RT-FDIR_TMPLT PUI: LADD96IM0770K GMT _____:_____:_____ (HR:MIN:SEC) 2. VERIFY: RT 18 JEM DIU EPS1 RT FDIR STATUS - INH OPS: PRIM_CCS_CB_EXT_1_RT_FDIR_INH_JEM_DIU_1_RT_18 PUI:LADP01MDAVX6J	
			VERIFY PDB_DMS 1 STATUS **NOTE** PDB-DMS1 WAS ACTIVATED PRIOR TO JCP BUT COMMUNICATION WAS NOT ESTABLISHED UNTIL JCP – A ACTIVATION.	
115-072	KEPS		PCS JPM:JEM EPS:PDB DMS1 'PDB DMS1' VERIFY: 1. DATA FRAME STATUS - CURRENT ENG: PDB_DMS1 DF STATUS PUI: JSDC00SWP520J 2. HEALTH SUMMARY – BLANK (NORMAL) ENG: (PDB_DMS1 HEALTH STATUS SUMMARY) PUI: JSDC00FCP500J	
115-073	KEPS	MS1	TCMS PDB DMS1:JPM EPS PDB DMS1 RECORD: PDB_DMS1 INPUT VOLTAGE _____ (BD) ENG: PDB_DMS1 INPUT VOLTAGE PUI: JSDC00FCP510V	

RELEASED - Printed documents may be obsolete; validate prior to use.

SECTION IV - OPERATION INSTRUCTIONS

SEQ/STEP	CMD	RESP	DESCRIPTION	VERIF.

NOTE

DIU A1 WAS ACTIVATED AUTOMATICALLY DURING JEM INITIAL ACTIVATION, BUT COMMUNICATION WAS NOT ESTABLISHED UNTIL JCP-A ACTIVATION.

VERIFY DIU - A1 STATUS

115-074 KCDH MS1 PCS
JPM:CDH:JEM SLB 1

'DIU A1'

VERIFY:

1. DI DF STATUS - CURRENT
   ENG: DIU_A1_DI DF STATUS
   PUI: JSDC00SWD020J

2. DI HEALTH STATUS - NORMAL
   ENG: DIU_A1 MONITOR STATUS
   PUI: JSDC00FCD001J

~OMRSD A3000MI.100-E (PARTIAL CDH DIU A1)

115-075 KCDH TCMS (DIU_A1)
'DIU BIT'
VERIFY:

1. BIT STATUS – VALID
   ENG: DIU A1_BITS STATUS
   PUI: JSDC00FCD00EJ

2. BIT RESULT - NORMAL
   ENG: DIU A1_BIT RESULT
   PUI: JSDC00FCD00FJ

3. HEALTH STATUS SUMMARY - NORMAL
   ENG: DIU-A1 HEALTH STATUS SUMMARY
   PUI: JSDC00FCD000J

~OMRSD A3000MI.100-E (PARTIAL CDH DIU A1)

RELEASED - Printed documents may be obsolete; validate prior to use.

SECTION IV - OPERATION INSTRUCTIONS

SEQ/STEP	CMD	RESP	DESCRIPTION	VERIF.

VERIFY COMM BETWEEN DIU A1 AND PDU A2 (PL_PDU_A)

NOTE

PDU-A2 WAS ACTIVATED AUTOMATICALLY DURING JEM INITIAL ACTIVATION, BUT COMMUNICATION WAS NOT ESTABLISHED UNTIL DIU-A1 COMMUNICATION WAS ESTABLISHED.

115-076 KEPS MS1 PCS
JPM:EPS:PDU A2
'PDU A2 RPC DETAILS'
'PDU A2'

1. VERIFY: DATA FRAME COUNTER – CURRENT
   PUI: JSDC00SWPF30J
   ENG: PDU_PL_A DF STATUS

2. VERIFY: HEALTH STATUS SUMMARY – BLANK (NORMAL)
   PUI: JSDC00FCPF00J
   ENG: PL_PDU_A HEALTH STATUS SUMMARY

~OMRSD A3000MI.100-E (EPS PDU A2)

115-077 KEPS TCMS
PDU A2:JPM EPS PDU A2

1. RECORD: JRPCM1 INPUT VOLTAGE _____ (BD)
   ENG: PL_PDU_A RPCM(RPC1-7) INPUT VOLTAGE
   PUI: JSDC00FCPF1XV

2. RECORD: JRPCM2 INPUT VOLTAGE _____ (BD)
   ENG: PL_PDU_A RPCM(RPC8-13) INPUT VOLTAGE
   PUI: JSDC00FCPF1YV

RELEASED - Printed documents may be obsolete; validate prior to use.

SECTION IV - OPERATION INSTRUCTIONS

SEQ/STEP	CMD	RESP	DESCRIPTION	VERIF.
			CONFIRM FAS / LIMIT CHECK FOR DIU_EPS1 AND DIU_A1 COMMUNICATION IS ENABLED	
115-078	KCDH		TCMS (DIU_EPS1) VERIFY: ENG: EVENT INHIBIT FLAG(EPS_RACK1_DIU COMMUNICATION ERROR) – ENA PUI: JSDC00SWZ320J	
115-079	KCDH		TCMS (DIU_A1) ‘DIU EVENT INIBIT FLAG’ DIU COMM ERR – ENA ENG: EVENT INHIBIT FLAG(DIU_A1 COMMUNICATION ERROR) PUI: JSDC00SWZ31MJ	
			INHIBIT COMMAND C&C MDM AND DIU-EPS–1	
115-080	KCDH	SSFE	CES MATE LOAD AND RUN MATE SCRIPT MEIT3_MATE_CMDS INDEX 0X0009 CMD: JPM_CDH_DIU_A4_CMD_RCV_FROM_C&C_MDM_INH PUI: JSDD96IM0005K GMT _____:_____:_____ (HR:MIN:SEC) ~OMRSD A3000MI.100-E (PARTIAL CDH DIU EPS1)	
115-081	KCDH		TCMS (DIU EPS 1) ‘DIU CMD INHIBIT FLAG VERIFY: MDM COMMAND - INHIBIT ENG: EPS_RACK1_DIU MDM COMMAND INHIBIT FLAG - INHIBIT PUI: JSDC00FCA11QJ	

RELEASED - Printed documents may be obsolete; validate prior to use.

SECTION IV - OPERATION INSTRUCTIONS

SEQ/STEP	CMD	RESP	DESCRIPTION	VERIF.
			INHIBIT COM TO DIU EPS1	
115-082	KCDH	MS1	PCS TASK:JPM CONTINGENCY CH A INIT ACT 'JPM CONTINGENCY CHANNEL A INITIAL ACTIVATION' 'DIU EPS 1' 1. CMD: RT I/O – INHIBIT OPS: (PRIM_CCS_INH_RT_TMPLT) PUI: LADD96IM1019K GMT _____:_____:_____ (HR:MIN:SEC) VERIFY: 2. RT I/O – INH OPS: PRIM_CCS_CB_EXT_1_RT_ENA_JEM_DIU_1_RT_18 PUI: LADP01MDAVX2J 3. DATA FRAME COUNTER - "NOT INCREMENTING" ENG: DIU-III-A STATUS/DISCRETE INPUT DATA FRAME TIME TAG PUI: JMDC03FC0011W	

RELEASED - Printed documents may be obsolete; validate prior to use.

SECTION IV - OPERATION INSTRUCTIONS

SEQ/STEP	CMD	RESP	DESCRIPTION	VERIF.

NOTE

ONCE COM IS INHIBITED BETWEEN DIU EPS1 AND C&C MDM THE ACTIVATION PUIS ARE NO LONGER VALID. THE PCS TASK DISPLAYS ARE NO LONGER VALID.

NOTE

PDB A2 COMMUNICATION INTERFACE IS AUTOMATICALLY ESTABLISHED AFTER PDU A1 RPC 11 IS CLOSED.

115-083 KEPS MS1 PCS
JPM:EPS:PDU A1
'PDU A1 RPC DETAILS'
'PDU A1'

1. CMD: PDU A1 RPC11 (PDB A2) - CLOSE
   OPS: JPM_EPS_PDU_A1_RPC11_(PDB_A2)_CL
   PUI: JSPX96IM0747K
   EXECUTE

   GMT _____:_____:_____ (HR:MIN:SEC)

2. VERIFY: PDU A1 RPC11 POSN - CL
   ENG: SYS_PDU_A_RPC11_POWER_STATUS
   PUI: JSDC00FCPH0QJ

115-084 KEPS MS1 PCS
JPM:EPS:PDB A2
'PDB A2 RPC DETAILS'
'PDB A2'

1. VERIFY: DATA FRAME STATUS – CURRENT
   PUI: JSDC00SWP220J
   ENG: PDB_A2 DF STATUS

2. HEALTH SUMMARY – BLANK (NORMAL)
   ENG:PDB_A2 HEALTH STATUS SUMMARY
   PUI: JSDC00FCP200J

RELEASED - Printed documents may be obsolete; validate prior to use.

SECTION IV - OPERATION INSTRUCTIONS

SEQ/STEP	CMD	RESP	DESCRIPTION	VERIF.
115-085	KEPS		TCMS PDB A2:JPM EPS PDB A2 RECORD: PDB A2 INPUT VOLTAGE_____ (BD) ENG: PDB_A2 INPUT VOLTAGE PUI: JSDC00FCP210V **ACTIVATE DIU_A2**	
115-086	KCDH	MS1	PCS JPM:JEM EPS:PDB_A2 'PDB A2 RPC DETAILS' 1. CMD: RPC 2 (DIU_A2_VDO) – CLOSE OPS JPM_EPS_PDB_A2_RPC02_(DIU_A2_VLV)_CL PUI: JSPX96IM0458K EXECUTE GMT _____:_____:_____ (HR:MIN:SEC) 2. VERIFY: RPC2(DIU A2VDO) POSN – CL ENG: PDB_A2 RPC2 POWER STATUS PUI: JSDC00FCP20DJ	
115-087	KCDH	MS1	PCS JPM:JEM EPS:PDB_A2 'PDB A2 RPC DETAILS' 1. CMD: RPC6 (DIU_A2_CNTLR) – CLOSE OPS: PDB_A2_RPC6_CL_(DIU_A2_CNTL) PUI: JSPX96IM0462K EXECUTE GMT _____:_____:_____ (HR:MIN:SEC) 2. VERIFY: RPC6 DIU A2 CNTLR POSN – CL ENG: PDB_A2 RPC6 POWER STATUS PUI: JSDC00FCP20HJ	

RELEASED - Printed documents may be obsolete; validate prior to use.

SECTION IV - OPERATION INSTRUCTIONS

SEQ/STEP	CMD	RESP	DESCRIPTION	VERIF.
			NOTE ALLOW 60 SECONDS FOR DIU-A2 TO COMPLETE INTERNAL BUILT IN TEST (BIT) PRIOR TO VERIFICATION OF THE FOLLOWING STEP.	
			VERIFY DIU-A2 STATUS	
115-088	KCDH	MS1	PCS JPM:CDH:JEM SLB_1 'DIU A2' VERIFY: 1. DI DF STATUS - CURRENT ENG: DIU_A2_DI DF STATUS PUI: JSDC00SWD220J 2. DI HEALTH STATUS - NORMAL ENG: DIU_A2 MONITOR STATUS PUI: JSDC00FCD201J ~OMRSD A3000MI.100-E (PARTIAL CDH DIU A2)	
115-089	KCDH		TCMS (DIU_A2) 1. BIT STATUS – VALID ENG: DIU_A2 BIT STATUS PUI: JSDC00FCD20EJ 2. BIT RESULT - NORMAL ENG: DIU A2 BIT RESULT PUI: JSDC00FCD20FJ 3. HEALTH STATUS SUMMARY - NORMAL ENG: DIU_A2 HEALTH STATUS SUMMARY PUI: JSDC00FCD200J ~OMRSD A3000MI.100-E (PARTIAL CDH DIU A2)	'DIU BIT '

RELEASED - Printed documents may be obsolete; validate prior to use.

SECTION IV - OPERATION INSTRUCTIONS

SEQ/STEP	CMD	RESP	DESCRIPTION	VERIF.

ESTABLISH COM BETWEEN DIU-A2 AND PDB_EPS1

NOTE

PDB EPS1 WAS ACTIVATED AUTOMATICALLY IN INITIAL ACTIVATION BUT COMMUNICATION IS ESTABLISHED AFTER DIU A2 IS ACTIVATED, SO IT IS VERIFIED IN FINAL ACTIVATION.

115-090 KCDH SSFE CES MATE
LOAD AND RUN MATE SCRIPT
MEIT3_MATE_CMDS
INDEX: 0X0011

CMD:
PRIM_JCP_START_SMPLNG_SIO_TMPLT
PUI: JSDD96IM0035K
PARAMETER1. 7 DIU_A2
PARAMETER2. 3 PDB-EPS1
EXECUTE:

GMT _____:_____:_____ (HR:MIN:SEC)

115-091 KCDH MS1 PCS
JPM:JEM EPS:PDB EPS 1
'PDB EPS1 RPC DETAILS'

VERIFY

1. DATA FRAME STATUS - CURRENT
   PDB_EPS1 DF STATUS
   PUI: JSDC00SWP720J

2. HEALTH SUMMARY – BLANK (NORMAL)
   ENG: PDB_EPS1 HEALTH STATUS SUMMARY
   PUI: JSDC00FCP700J

~OMRSD A3000MI.100-E (EPS PDB EPS1)

115-092 KEPS TCMS
PDB:JEM EPS PDB EPS1

RECORD: PDB_EPS1 INPUT VOLTAGE _____
(BD)
ENG: PDB_EPS1 INPUT VOLTAGE
PUI: JSDC00FCP710V

RELEASED - Printed documents may be obsolete; validate prior to use.

SECTION IV - OPERATION INSTRUCTIONS

SEQ/STEP	CMD	RESP	DESCRIPTION	VERIF.
			ACTIVATE DIU-A3	
115-093	KCDH	MS1	PCS JPM:JEM EPS:PDB_A2 'PDB A2 RPC DETAILS' 1. CMD: RPC 5 (DIU_A3 VDO) – CLOSE OPS JPM_EPS_PDB_A2_RPC05_(DIU_A3_VD0)_POSN PUI: JSPX96IM0461K EXECUTE GMT _____:_____:_____ (HR:MIN:SEC) 2. VERIFY: RPC5 (DIU A3 VDO) POSN – CL ENG: PDB_A2 RPC5 POWER STATUS PUI: JSDC00FCP20GJ	
115-094	KCDH	MS1	PCS JEM EPS:PDB_A2 RPC DETAILS 'PDB A2 RPC DETAILS' 1. CMD: : RPC 7 (DIU_A3_CNTRL) – CLOSE OPS: PDB_A2_RPC7_CL_(DIU_A3_CNTL) PUI: JSPX96IM0463K GMT _____:_____:_____ (HR:MIN:SEC) 2. VERIFY: RPC7 (DIU A3 CNTRL) POSN - CL ENG: PDB_A2 RPC7 POWER STATUS PUI: JSDC00FCP20IJ	

RELEASED - Printed documents may be obsolete; validate prior to use.

SECTION IV - OPERATION INSTRUCTIONS

SEQ/STEP	CMD	RESP	DESCRIPTION	VERIF.
			NOTE ALLOW 60 SECONDS FOR DIU-A3 TO COMPLETE INTERNAL BUILT IN TEST (BIT) PRIOR TO VERIFICATION OF THE FOLLOWING STEP.	
			VERIFY DIU-A3 STATUS	
115-095	KCDH	MS1	PCS JPM:CDH: JEM SLB_1 'DIU A3' VERIFY: 1. DI DF STATUS – CURRENT ENG: DIU_A3_DI DF STATUS PUI: JSDC00SWD420J 2. DI HEALTH STATUS – NORMAL ENG: DIU_A3 MONITOR STATUS PUI: JSDC00FCD401J ~OMRSD A3000MI.100-E (PARTIAL CDH DIU A3)	
			NOTE IT MAY TAKE UP TO ONE MINUTE TO PERFORM THE VERIFICATIONS IN THE FOLLOWING STEP.	
115-096	KCDH		TCMS (DIU_A3) 'DIU BIT ' 1. HEALTH SUM - NORMAL ENG: DIU-A3 HEALTH STATUS SUMMARY PUI: JSDC00FCD400J 2. BIT STATUS – VALID ENG: DIU_A3 BIT STATUS PUI: JSDC00FCD40EJ 3. BIT RESULT –NORMAL ENG: DIU_A3 BIT RESULT PUI: JSDC00FCD40FJ ~OMRSD A3000MI.100-E (PARTIAL CDH DIU A3)	

RELEASED - Printed documents may be obsolete; validate prior to use.

SECTION IV - OPERATION INSTRUCTIONS

SEQ/STEP	CMD	RESP	DESCRIPTION	VERIF.
			ACTIVATE PDB_A1	
			NOTE PDB A1 COMMUNICATION INTERFACE IS AUTOMATICALLY ESTABLISHED AFTER PDU A1 RPC 12 IS CLOSED.	
115-097	KEPS	MS1	PCS JPM:EPS:PDU A1 'PDU A1 RPC DETAILS' 'PDU A1' 1. CMD: PDU A1 RPC12 (PDB A1) - CLOSE PUI: JSPX96IM0748K OPS: JPM_EPS_PDU_A1_RPC12_(PDB_A1)_CL EXECUTE VERIFY: 2. PDU A1 RPC12 (PDB A1) POSN - CL PUI: JSDC00FCPH0RJ ENG: SYS_PDU_A RPC12 POWER STATUS JPM:EPS:PDB A1 'PDB A1 RPC DETAILS' 'PDB A1' 3. HEALTH SUMMARY – BLANK (NORMAL) PUI: JSDC00FCP100J ENG: PDB_A1 HEALTH STATUS SUMMARY	
115-098	KEPS		TCMS PDB A1:JPM EPS PDB A1 RECORD: PDB A1 INPUT VOLTAGE_____ (BD) ENG: PDB_A1 INPUT VOLTAGE PUI: JSDC00FCP110V	

RELEASED - Printed documents may be obsolete; validate prior to use.

SECTION IV - OPERATION INSTRUCTIONS

SEQ/STEP	CMD	RESP	DESCRIPTION	VERIF.
			ACTIVATE PIB-A2	
115-099	KEPS	MS1	PCS JPM:EPS:PDB A2 'PDB A2 RPC DETAILS' 'PDB A2' 1. CMD: PDB A2 RPC3 (PIB A2) - CLOSE PUI: JSPX96IM0459K OPS: JPM_EPS_PDB_A2_RPC03_(PIB_A2)_CL EXECUTE GMT _____:_____:_____ (HR:MIN:SEC) VERIFY: 2. PDB A2 RPC3 POSN (PIB A2) - CL PUI: JSDC00FCP20EJ ENG: PDB_A2 RPC3 POWER STATUS	
115-100	KEPS	MS1	PCS JPM:EPS:PIB A2 'PIB A2 SWITCH DETAILS' 'PIB A2' VERIFY: 1. DATA FRAME STATUS - CURRENT ENG: PIB_A2 DF STATUS PUI: JSDC00SWPD70J 2. HEALTH SUMMARY – BLANK (NORMAL) ENG: PIB_A2 HEALTH STATUS SUMMARY PUI: JSDC00FCPD00J	
115-101	KEPS		TCMS PIB A2:JPM EPS PIB A2 1. BIT STATUS -VALID ENG: PIB_A2 BIT STATUS PUI:	JSDC00FCPD39J
			2. BIT RESULT -NORMAL ENG: PIB_A2 BIT RESULT PUI: JSDC00FCPD3AJ	

RELEASED - Printed documents may be obsolete; validate prior to use.

SECTION IV - OPERATION INSTRUCTIONS

SEQ/STEP	CMD	RESP	DESCRIPTION	VERIF.
			ACTIVATE DIU A 1 VDO POWER	
115-102	KCDH	MS1	PCS JPM:JEM EPS:PDB_EPS1 'PDB EPS1 RPC DETAILS' 1. CMD: RPC 02 (DIU_A1 VDO PWR) - CLOSE OPS JPM_EPS_PDB_A_EPS1_RPC02_(DIU_A1_VD0)_CL PUI: JSPX96IM0536K GMT _____:_____:_____ (HR:MIN:SEC) 2. VERIFY: RPC 2 (DIU A1 VDO PWR) POSN – CL ENG: PDB_EPS_1_RPC2_POWER_STATUS PUI: JSDC00FCP70DJ	
			SET PIB LOAD LIMIT	
			DEACTIVATE TEMP CONTROL	
115-103	KTCS	MS1	PCS JPM:TCS 'JEM:ATCS OVERVIEW' 'TCA' VERIFY TCA L MTL TEMP – 13-22 DEGC ENG: JPM_ATCS_TCA_L_MTL_TWMV_B_CNTL_TEMP PUI: JSDC00FCTA0XT	
			DEACTIVATE MTL TEMP CNTRL	
115-104	KTCS	SSFE	CES MATE LOAD AND RUN MATE SCRIPT MEIT3_MATE_CMDS INDEX: 0X013A CMD: TCA_L MTL TEMP CNTRL - STOP ENG: STOP TCA_L_MTL_TEMP_CNTRL [OVERRIDE] PUI: JSTE96IM0336K GMT _____:_____:_____ (HR:MIN:SEC)	

RELEASED - Printed documents may be obsolete; validate prior to use.

SECTION IV - OPERATION INSTRUCTIONS

SEQ/STEP	CMD	RESP	DESCRIPTION	VERIF.
115-105	KTCS	MS1	PCS:JPM:TCS:JPM ATCS MTL 'JPM ATCS MTL' 'MTL' 'TCV A' VERIFY: OPER STAT - STOPPED PUI: JSDC00FCTA0JJ	
115-106	KTCS	SSFE	CES MATE LOAD AND RUN MATE SCRIPT MEIT3_MATE_CMDS INDEX: 0X013B CMD: PIB A1 120V L SW6 POSN - OPEN ENG: POWER_OFF PIB_A1_120V_L_SW6[OVERRIDE] PUI: JSPC96IM0004K GMT _____:_____:_____ (HR:MIN:SEC)	
115-107	KTCS	MS1	PCS:JPM:TCS:JPM ATCS MTL 'JPM ATCS MTL' 'MTL' 'TCV A' VERIFY: PIB A1 120V L SW6 POSN - OFF PUI: JSDC00FCPC25J	

RELEASED - Printed documents may be obsolete; validate prior to use.

SECTION IV - OPERATION INSTRUCTIONS

SEQ/STEP	CMD	RESP	DESCRIPTION	VERIF.
			STOP SAMPLING FROM PIB_A1	
115-108	KEPS	SSFE	CES MATE LOAD AND RUN MATE SCRIPT MEIT3_MATE_CMDS INDEX: 0X0035 CMD: DIU_EPS1/ PIB-A1 COM – STOP ENG: STOP_SAMPLING SIO PUI: JSDD96IM0036K EXECUTE PARAMETER1. DIU_EPS1 (4) PARAMETER2. PIB_A1 (3) GMT _____:_____:_____ (HR:MIN:SEC)	
115-109	KEPS	MS1	PCS JPM:EPS:PIB A1 'PIB A1 SWITCH DETAILS' 'PIB A1' VERIFY: DATA FRAME STATUS - LAST_VALUE PUI: JSDC00SWPC70J ENG: PIB_A1 DF STATUS	
115-110	KEPS	MS1	PCS JPM:EPS:PDB EPS1 'PDB EPS1 RPC DETAILS' VERIFY: PDB EPS1 RPC3 (PIB A1) POSN - CL PUI: JSDC00FCP70EJ ENG: PDB_EPS1 RPC3 POWER STATUS	

RELEASED - Printed documents may be obsolete; validate prior to use.

SECTION IV - OPERATION INSTRUCTIONS

SEQ/STEP	CMD	RESP	DESCRIPTION	VERIF.
115-111	KEPS	MS1	PCS JPM:EPS:PIB A1 'PIB A1 SWITCH DETAILS' 'PIB A1' VERIFY 1. DATA FRAME STATUS - CURRENT PUI: JSDC00SWPC70J ENG: PIB_A1 DF STATUS 2. HEALTH SUMMARY – BLANK (NORMAL) PUI: JSDC00FCPC00J ENG: PIB_A1 HEALTH STATUS SUMMARY **REACTIVATE MTL CONTROL**	
115-112	KTCS	MS1	PCS JPM:EPS:PIB A1 'PIB A1 SWITCH DETAILS' '120V/0.5A' 1. CMD: SWITCH 6 (TCA L MTL TWMV A) - CLOSE ENG: POWER_ON PIB_A1_120V_L_SW6 PUI: JSTE96IM0119K GMT _____:_____:_____ (HR:MIN:SEC) 2. VERIFY: SWITCH 6 (TCA L MTL TWMV A) POSN - CL PUI: JSDC00FCPC25J	

RELEASED - Printed documents may be obsolete; validate prior to use.

SECTION IV - OPERATION INSTRUCTIONS

SEQ/STEP	CMD	RESP	DESCRIPTION	VERIF.
115-113	KTCS	MS1	PCS JPM:TCS:JPM ATCS MTL 'JPM ATCS MTL' 'MTL' 'TCV A' 1. CMD: TCA L MTL TEMP CNTRL -START ENG: START TCA_L_MTL_TEMP_CNTRL PUI: JSTE96IM0297K GMT _____:_____:_____ (HR:MIN:SEC) 2. VERIFY: OPER STATUS - EXEC PUI: JSDC00FCTA0JJ **NOTE** ALLOW SYSTEM TO THERMALLY STABILIZE PRIOR TO PERFORMING NEXT STEP.	
115-114	KTCS	MS1	PCS JPM:TCS 'JEM:ATCS OVERVIEW' 'TCA' VERIFY TCA L MTL TEMP – 13 - 22 DEGC ENG: JPM_ATCS_TCA_L_MTL_TWMV_A_CNTL_TEMP PUI: JSDC00FCTA0XT	

RELEASED - Printed documents may be obsolete; validate prior to use.

SECTION IV - OPERATION INSTRUCTIONS

SEQ/STEP	CMD	RESP	DESCRIPTION	VERIF.
			ACTIVATE A STRING TCS/ECLSS SENSORS	
			POWER ON JPM CABIN PRESSURE SENSOR A1, A2	
115-115	KECL	MS1	PCS JPM:EPS:PIB_A1 PIB A1 SWITCH DETAILS '15V/0.05A' 1. CMD: SWITCH 8 (JPM CABIN PRESS SNSR A1) – CLOSE OPS: JPM_EPS_PIB_A1_15V_SW08_(JPM_CABIN_PRESS_SNSR_A1)_CL PUI: JSPX96IM0638K GMT _____:_____:_____ (HR:MIN:SEC) 2. VERIFY: SWITCH 8 (JPM CABIN PRESS SNSR A1) POSN - CL ENG: PIB_A1 15V SW8 POWER STATUS PUI: JSDC00FCPC1VJ	
115-116	KECL	MS1	PCS JPM:ECLSS JPM ECLSS 'CABIN PRESS 1' RECORD/VERIFY: CABIN PRESS 1 - _____MMHG (>727 MMHG) ENG: PM_CABIN_PRESS1 PUI: JSDC00FCE410P ~OMRSD A3000MI.100-E (ECLSS CPS A1)	

RELEASED - Printed documents may be obsolete; validate prior to use.

SECTION IV - OPERATION INSTRUCTIONS

SEQ/STEP	CMD	RESP	DESCRIPTION	VERIF.
115-117	KECL	MS1	PCS JPM:EPS:PIB_A1 PIB A1 SWITCH DETAILS ‘15V/0.05A’ 1. CMD: SWITCH 1 (JPM CABIN PRESS SNSR A2) - CLOSE OPS: JPM_EPS_PIB_A1_15V_SW01_(JPM_CABIN_PRESS_SNSR_A2)_CL PUI: JSPX96IM0637K GMT _____:_____:_____ (HR:MIN:SEC) 2. VERIFY: SWITCH 1 (JPM CABIN PRESS SNSR A2) POSN – CL ENG: PIB_A1 15V SW1 POWER STATUS PUI: JSDC00FCPC1OJ	
115-118	KECL	MS1	PCS JPM:ECLSS JPM ECLSS ‘CABIN PRESS 2’ RECORD/VERIFY: CABIN PRESS 2 - _____MMHG (>727 MMHG) ENG: PM_CABIN_PRESS2 PUI: JSDC00FCE400P ~OMRSD A3000MI.100-E (ECLSS CPS A2)	

RELEASED - Printed documents may be obsolete; validate prior to use.

SECTION IV - OPERATION INSTRUCTIONS

SEQ/STEP	CMD	RESP	DESCRIPTION	VERIF.
			POWER ON CHX FLOW RATE SENSOR A	
115-119	KTCS	MS1	PCS JPM:EPS:PIB_A1 PIB A1 SWITCH DETAILS '120V/0.5A' 1. CMD: SW39 (LTL THC A CHX FRS) - CLOSE OPS: PIB_A1_120V_L_SW39_CL_(LTL_THC_A_CHX_FRSNSR) PUI: JSTE96IM0133K GMT _____:_____:_____ (HR:MIN:SEC) 2. VERIFY: SW39 POSN – CL PUI: JSDC00FCPC32J	
			POWER ON JEFHX FLOW RATE SENSOR A	
115-120	KTCS	MS1	PCS JPM:EPS:PIB_A2 PIB A2 SWITCH DETAILS '120V/0.5A' 1. CMD: SW35 (MTL JEFHX FRS A) - CLOSE OPS: PIB_A2_120V_L_SW35_CL_(MTL_JEF_HX_FR_SNSR_A) PUI: JSTE96IM0168K GMT _____:_____:_____ (HR:MIN:SEC) 2. VERIFY: SW35 POSN – CL PUI: JSDC00FCPD2YJ	

RELEASED - Printed documents may be obsolete; validate prior to use.

SECTION IV - OPERATION INSTRUCTIONS

SEQ/STEP	CMD	RESP	DESCRIPTION	VERIF.
			SET POSITION EF-HX FLOW MODULATION VALVE - A	
115-121	KTCS	MS1	PCS JPM:EPS:PIB_A2 PIB A2 SWITCH DETAILS '120V/0.5A' 1. CMD: SWITCH 5 (MTL JEFHX IN FCV A) – CLOSE OPS: POWER_ON PIB_A2_120V_L_SW5 PUI: JSTE96IM0158K GMT _____:_____:_____ (HR:MIN:SEC) 2. VERIFY: PIB_A2 120V L SW5 POSN – CL ENG: JPM_EPS_PIB_A2_120V_L_SW5_(MTL_JEFHX_IN_FC V_A)_POSN PUI: JSDC00FCPD24J	
115-122	KTCS	MS1	PCS JPM:TCS:JPM ATCS MTL 'JPM ATCS MTL' 'JEFHX' 'IN FCV A' 1. ENTER: VALVE POSN – 30 DEG 2. CMD: VALVE POSN - SET OPS: JPM_ATCS_MTL_JEFHX_IN_FAA_A_FCV_POSN_SET_T MPLT PUI: JSTE96IM0252K GMT _____:_____:_____ (HR:MIN:SEC) 3. VERIFY: PIB_A2 120V L SW5 POSN - OP ENG: JPM_EPS_PIB_A2_120V_L_SW5_(MTL_JEFHX_IN_FC V_A)_POSN PUI: JSDC00FCPD24J	

RELEASED - Printed documents may be obsolete; validate prior to use.

SECTION IV - OPERATION INSTRUCTIONS

SEQ/STEP	CMD	RESP	DESCRIPTION	VERIF.
115-123	KTCS	MS1	PCS JPM TCS 'JPM ATCS OVERVIEW' 'LOOP' VERIFY/RECORD: MTL JEF HX IN FLOW RATE A_____(> 100 KG/HR) PUI: JSDC00FCT100R ENG: EF_HX_MTL_FLOW_RATE_A **POWER ON MTL EQUIP A DP SENSOR A**	
115-124	KTCS	MS1	PCS JPM:EPS:PIB_A2 PIB A2 SWITCH DETAILS '15V/0.05A' 1. CMD: SW9 (MTL EQUIP A DP SNSR A) - CLOSE OPS: PIB_A2_15V_SW9_CL_(MTL_DIFF_PRESS_SNSR_A) PUI: JSTE96IM0155K GMT _____:_____:_____ (HR:MIN:SEC) 2. VERIFY: SW9 POSN – CL PUI: JSDC00FCPD1WJ	
115-125	KTCS	MS1	JPM:TCS 'JPM:ATCS OVERVIEW' VERIFY: 'LOOP' MTL LOOP DP A - >51.6KPA PUI: JSDC00FCT000P	

RELEASED - Printed documents may be obsolete; validate prior to use.

SECTION IV - OPERATION INSTRUCTIONS

SEQ/STEP	CMD	RESP	DESCRIPTION	VERIF.
			POWER ON LTL DP SENSOR A	
115-126	KTCS	MS1	PCS JPM:EPS:PIB_A2 PIB A2 SWITCH DETAILS '15V/0.05A' 1. CMD: SW8 (LTL DP SNSR A) - CLOSE OPS: PIB_A2_15V_SW8_CL_(LTL_DIFF_PRESS_SNSR_A) PUI: JSTE96IM0154K GMT _____:_____:_____ (HR:MIN:SEC) 2. VERIFY: SW8 POSN – CL PUI: JSDC00FCPD1VJ	
115-127	KTCS	MS1	PCS JPM:TCS 'JPM ATCS OVERVIEW' 'LOOP' VERIFY: LTL LOOP DP A - >51.6 KPA PUI: JSDC00FCT020P	
			POWER ON LTL BYPASS FLOW RATE SENSOR A	
115-128	KTCS	MS1	PCS JPM:EPS:PIB_A1 PIB A1 SWITCH DETAILS '120V/0.5A' 1. CMD: SW38 (LTL BYP LINE FRS A) - CLOSE OPS: PIB_A1_120V_L_SW38_CL_(LTL_BYP_FR_SNSR_A) PUI: JSTE96IM0132K GMT _____:_____:_____ (HR:MIN:SEC) 2. VERIFY: SW38 POSN – CL PUI: JSDC00FCPC31J	

RELEASED - Printed documents may be obsolete; validate prior to use.

SECTION IV - OPERATION INSTRUCTIONS

SEQ/STEP	CMD	RESP	DESCRIPTION	VERIF.
115-129	KTCS	MS1	PCS JPM:TCS:JPM ATCS LTL JPM ATCS LTL 'BYPASS FCV A' RECORD: BYPASS FLOW RATE A _____ KG/HR (BD) PUI: JSDC00FCT1F0R **SELECT FAS/LIMIT SET FOR MTL EFHX FLOW RATE**	
115-130	KTCS	SSFE	CES MATE LOAD AND RUN MATE SCRIPT MEIT3_MATE_CMDS INDEX: 0X0058 CMD: LIMIT SET(EF_HX MTL FLOW RATE LOW(A)) - 1 ENG: JPM_CDH_ACTIVE_JCP_EVENT_LIM_SET_NUM_SEL_TMPLT PUI: JSDD96IM0224K PARAMETER: 528 (EF_HX MTL FLOW RATE LOW(A)) PARAMETER: 1	
115-131	KTCS		TCMS VERIFY: LIMIT SET(EF_HX MTL FLOW RATE LOW(A))- 1 PUI: JSDC00SWZ2CVU **SELECT FAS/LIMIT SET FOR MTL DIFFERENTIAL PRESS**	
115-132	KTCS	SSFE	CES MATE LOAD AND RUN MATE SCRIPT MEIT3_MATE_CMDS INDEX: 0X0056 CMD: LIMIT SET(MTL DIFFERENTIAL PRESSURE LOW(A)) - 1 ENG: JPM_CDH_ACTIVE_JCP_EVENT_LIM_SET_NUM_SEL_TMPLT PUI: JSDD96IM0224K PARAMETER:414 (MTL DIFFERENTIAL PRESSURE LOW(A)) PARAMETER: 1	

RELEASED - Printed documents may be obsolete; validate prior to use.

SECTION IV - OPERATION INSTRUCTIONS

SEQ/STEP	CMD	RESP	DESCRIPTION	VERIF.
115-133	KTCS		TCMS VERIFY: LIMIT SET(MTL DIFFERENTIAL PRESSURE LOW(A)) - 1 PUI: JSDC00SWZ28AU **SELECT FAS/LIMIT SET FOR LTL DIFFERENTIAL PRESS**	
115-134	KTCS	SSFE	CES MATE LOAD AND RUN MATE SCRIPT MEIT3_MATE_CMDS INDEX: 0X0057 CMD: LIMIT SET(LTL DIFFERENTIAL PRESSURE LOW(A)) - 1 ENG: JPM_CDH_ACTIVE_JCP_EVENT_LIM_SET_NUM_SEL_TMPLT PUI: JSDD96IM0224K PARAMETER: 416 (LTL DIFFERENTIAL PRESSURE LOW(A)) PARAMETER: 1	
115-135	KTCS		TCMS VERIFY: LIMIT SET(LTL DIFFERENTIAL PRESSURE LOW(A)) - 1 PUI: JSDC00SWZ28BU	

RELEASED - Printed documents may be obsolete; validate prior to use.

SECTION IV - OPERATION INSTRUCTIONS

SEQ/STEP	CMD	RESP	DESCRIPTION	VERIF.
			OPEN FWD N2 SUPPLY VALVE	
115-136	KECL	MS1	PCS JPM:ECLSS:JPM ESS:PIB A1 SWITCH DETAILS PIB A1 SWITCH DETAILS '120V/0.5A' 1. CMD: SWITCH 1 (GN2 STBD DECK SOV A) - CLOSE OPS: JPM_EPS_PIB_A1_120V_L_SW01_(N2_STBD_DECK_SOV_A)_CL PUI: JSPX96IM0639K GMT _____:_____:_____ (HR:MIN:SEC) 2. VERIFY: SWITCH 1 (GN2 STBD DECK SOV A) POSN – CL ENG: PIB_A1 120V_L SW1 POWER STATUS PUI: JSDC00FCPC20J	

RELEASED - Printed documents may be obsolete; validate prior to use.

SECTION IV - OPERATION INSTRUCTIONS

SEQ/STEP	CMD	RESP	DESCRIPTION	VERIF.

NOTE

FWD N2 SUPPLY VALVE IS NOT MOVED BY THESE STEPS BECAUSE VALVE ALREADY IS OPEN BEFORE THESE STEPS FOR PROVIDED N2 GAS TO ACCUMLATOR.

115-137 KECL MS1 PCS
JPM:ECLSS:JPM ESS
JPM ESS

'GAS SUPPLY'

1. CMD: STBD FWD SOV POSITION - OPEN
   OPS: JPM_ESS_GN2_STBD_FWD_SOV_A_OP
   PUI: JSEP96IM0017K

   GMT _____:_____:_____ (HR:MIN:SEC)

   VERIFY/RECORD:

NOTE

THE PCS DISPLAY HAS THE TWO VALVE POSITIONS SWAPPED (FWD LABELED AFT, AFT LABELED FWD). WHEN VERIFYING VALVE POSITIONS, CHECK THE OPPOSITE FIELD ON THE PCS, AND ALSO VERIFY ON TCMS (WHICH IS CORRECTLY LABELED). THIS IS DOCUMENTED IN _____. SUBSTEP 3 BELOW IS FOR INFORMATIONAL PURPOSES ONLY.

2. STBD FWD SOV POSITION (STACK) - OPEN
   ENG: FWD_N2_SUPPLY_VALVE STACK POSTN
   PUI: JSDC00SWK411J

3. STBD AFT SOV POSITION (STACK) - _____(BD)
   ENG: AFT_N2_SUPPLY_VALVE STACK POSTN
   PUI: JSDC00SWK401J

4. SWITCH 1 POSN - OP
   ENG: PIB_A2 120V_L SW1 POWER STATUS
   PUI: JSDC00FCPD20J

RELEASED - Printed documents may be obsolete; validate prior to use.

SECTION IV - OPERATION INSTRUCTIONS

SEQ/STEP	CMD	RESP	DESCRIPTION	VERIF.

THC_A_ACTIVATION

POWER ON THC-A CABIN FAN

NOTE

WHEN THE THC FAN IS ACTIVATED, A PDB A TCS1 RPC01 TRIP MAY OCCUR, THEN THE TRIP STATUS IMMEDIATELY RETURNS TO NORMAL (NO TRIP). IF IT TRIPS, THIS ALSO CAUSES THE PDB A TCS1 HEALTH STAT SUM TO INDICATE “ERROR”. HEALTH STATUS SUMMARY ERROR HAS NO IMPACT TO JEM SYSTEMS AND IS RESET BY ACTIVATING THCU A.

115-138 KECL MS1 PCS
JPM:ECLSS:THC A:THC A COMMANDS:PDB TCS1 RPC DETAILS
PDB TCS1 RPC DETAILS

‘PDB TCS1’

1. CMD: RPC 1 (THC A FAN) - CLOSE
   OPS:
   JPM_EPS_PDB_A_TCS1_RPC01_(THC_A_FAN)_CL
   PUI: JSPX96IM0588K

   GMT _____:_____:_____ (HR:MIN:SEC)

2. VERIFY: RPC 1 (THC A FAN) POSN - CL
   ENG: PDB_TCS1 RPC1 POWER STATUS
   PUI: JSDC00FCP90CJ

RELEASED - Printed documents may be obsolete; validate prior to use.

SECTION IV - OPERATION INSTRUCTIONS

SEQ/STEP	CMD	RESP	DESCRIPTION	VERIF.

NOTE

NEXT STEP IS JUST CONFIRMATION FOR THE CHARACTERISTICS OF THE THC FAN POWERING ON.

115-139 KECL KEPS PCS
JPM:ECLSS:THC A:THC A COMMANDS:PDB TCS1 RPC DETAILS
PDB TCS1 RPC DETAILS

RECORD: HEALTH SUMMARY – _____
ENG: PDB_TCS1 HEALTH STATUS SUMMARY
PUI: JSDC00FCP900J

POWER ON THCU A

115-140 KECL MS1 PCS
JPM:ECLSS:THC A:THC A COMMANDS:PDB TCS1 RPC DETAILS
PDB TCS1 RPC DETAILS

'PDB TCS1'

1. CMD: RPC 5 (THCU A) - CLOSE
   OPS: JPM_EPS_PDB_A_TCS1_RPC05_(THCU_A)_CL
   PUI: JSPX96IM0591K

   GMT _____:_____:_____ (HR:MIN:SEC)

2. VERIFY: RPC 5 (THCU A) POSN - CL
   ENG: PDB_TCS1 RPC5 POWER STATUS
   PUI: JSDC00FCP90GJ

RELEASED - Printed documents may be obsolete; validate prior to use.

SECTION IV - OPERATION INSTRUCTIONS

SEQ/STEP	CMD	RESP	DESCRIPTION	VERIF.
			NOTE WAIT 80 SECONDS UNTIL THCU A POWER-ON-BIT IS FINISHED	
115-141	KECL	MS1	PCS JPM: ECLSS:THC A:THC A COMMANDS JPM THC A COMMANDS 'STATUS' VERIFY: DATA FRAM STAT - CURRENT ENG: THC_A DF STATUS PUI: JSDC00SWEA20J	
115-142	KECL	MS1	PCS JPM: ECLSS:THC A:THC A COMMANDS:PDB_TCS1 RPC DETAILS PDB TCS1 RPC DETAILS 'PDB TCS1' VERIFY: HEALTH SUMMARY – BLANK (NORMAL) ENG: PDB_TCS1 HEALTH STATUS SUMMARY PUI: JSDC00FCP900J	
115-143	KECL	MS1	PCS JPM:ECLSS:THC A:THC A COMMANDS JPM THC A COMMANDS 'STATUS' VERIFY: HEALTH STAT SUMM – NORMAL ENG: THC_A HEALTH STATUS SUMMARY STACK PUI: JSDC00FCEA0GJ	
115-144	KECL		TCMS:THC A VERIFY: 1. BIT STATUS (STACK) – VALID ENG: THC_A BIT STATUS STACK PUI: JSDC00FCEA0IJ 2. CNTLR BIT RESULT (STACK) - NORMAL ENG: THC_A CNTLR BIT RESULT STACK PUI: JSDC00FCEA0HJ	

RELEASED - Printed documents may be obsolete; validate prior to use.

SECTION IV - OPERATION INSTRUCTIONS

SEQ/STEP	CMD	RESP	DESCRIPTION	VERIF.
			SELECT THC A FAN SPEED	
115-145	KECL	MS1	PCS JPM:ECLSS:THC A: HC A COMMANDS JPM THC A COMMANDS 'FAN' RECORD: SPEED – _____RPM (BD) ENG: THC_A CABIN FAN SPEED CURRENT PUI: JSDC00FCEA02R **NOTE** THC A FAN ACTIVATION TAKES APPROXIMATELY 35 SECONDS.	
115-146	KECL	MS1	PCS JPM:ECLSS:THC A:THC A COMMANDS JEM THC A COMMANDS 'FAN' CMD: SPEED_- INTERMEDIATE OPS: JPM_ECL_THC_A_CABIN_FAN_SPD_INTERMEDIATE PUI: JSET96IM0030K GMT _____:_____:_____ (HR:MIN:SEC) (RECORD IN APPENDIX G)	
115-147	KECL	MS1	PCS JPM:ECLSS:THC A:THC A COMMANDS JPM THC A COMMANDS 'THC A' VERIFY/RECORD: 1. OPS MODE - MANUAL ENG: THC_A RUN STATUS PUI: JSDC00FCEA0XJ 2. FAN SPEED – _____RPM (4958 - 6102 RPM) ENG: THC_A CABIN FAN SPEED CURRENT PUI: JSDC00FCEA02R	

RELEASED - Printed documents may be obsolete; validate prior to use.

SECTION IV - OPERATION INSTRUCTIONS

SEQ/STEP	CMD	RESP	DESCRIPTION	VERIF.
			ACTIVATE A STRING CABIN SMOKE DETECTOR	
115-148	KECL	MS1	PCS JPM:ECLSS:SD A:PIB A1 SWITCH DETAILS PIB A1 SWITCH DETAILS '120V/0.5A' 1. CMD: SWITCH 30 (JPM CABIN SD A) - CLOSE OPS: JPM_EPS_PIB_A1_120V_L_SW30_(JPM_CABIN_SD_A)_CL PUI: JSPX96IM0644K GMT _____:_____:_____ (HR:MIN:SEC) 2. VERIFY: SWITCH 30 (JPM CABIN SD A) POSN - CL ENG: PIB_A1 120V_L SW30 POWER STATUS PUI: JSDC00FCPC2TJ	

RELEASED - Printed documents may be obsolete; validate prior to use.

SECTION IV - OPERATION INSTRUCTIONS

SEQ/STEP	CMD	RESP	DESCRIPTION	VERIF.

SET CABIN SD A BIT THRESHOLD

115-149 KECL MS1 PCS
JEM_ECLSS:SD A
JPM CABIN SMOKE DETECTOR A

'BIT THRESHOLD'

1. CMD: BIT THRESHOLD
   PARAMETER 1: BIT OBS HI RAIL: –3.60
   PARAMETER 2: BIT LED SCTR LOW RAIL: 1.86
   PARAMETER 3: BIT LED SCTR HI RAIL: 3.86
   PARAMETER 4: BIT QUIET SCTR HI RAIL: 0.50
   SET
   OPS:
   JPM_ECL_FDS_CABIN_SD_A_BIT_THOLD_SET_TMPLT
   PUI: JSEF96IM0030K

   GMT _____:_____:_____ (HR:MIN:SEC)

   VERIFY:

2. BIT OBS HI RAIL - -3.60 +/- 0.08 VOLTS
   ENG: PM_CABIN_SD_A BIT OBSCURATION HIGH RAIL
   PUI: JSDC00FCE71BV

3. BIT LED SCTR LOW RAIL - 1.86 +/- 0.08 VOLTS
   ENG: PM_CABIN_SD_A BIT LED SCATTER LOW RAIL
   PUI: JSDC00FCE71CV

4. BIT LED SCTR HI RAIL - 3.86 +/- 0.08 VOLTS
   ENG: PM_CABIN_SD_A BIT LED SCATTER HIGH RAIL
   PUI: JSDC00FCE71DV

RELEASED - Printed documents may be obsolete; validate prior to use.

SECTION IV - OPERATION INSTRUCTIONS

SEQ/STEP	CMD	RESP	DESCRIPTION	VERIF.

NOTE

THE FOLLOWING COMMAND CHANGES SIX THRESHOLD DEFAULT VALUES FOR THE SMOKE DETECTOR. ONLY THE “OBSCURATION THRESHOLD” AND THE “SCATTER THRESHOLD” CAN BE CONFIRMED. SINCE THESE TWO DEFAULT VALUES ARE NOT CHANGED, TO CONFIRM THE COMMAND IS RECEIVED SUCCESSFULLY, THE “OSCURATION THRESHOLD” WILL BE TEMPORARILY UPDATED TO 0.00 VOLTS, AND RESET TO THE DEFAULT VALUE OF 0.50 VOLTS.

115-150 KECL MS1 PCS
JPM:ECLSS:SD A
JPM CABIN SMOKE DETECTOR A

‘THRESHOLD’

1. CMD: THRESHOLD
   PARAMETER 1: OBS THRESHOLD: 0.00
   PARAMETER 2: OBS HI RAIL: 0.00
   PARAMETER 3: OBS LOW RAIL: 0.00
   PARAMETER 4: SCTR THRESHOLD: 0.00
   PARAMETER 5: SCTR LOW RAIL: 0.00
   PARAMETER 6: LENS CONTAM LOW LIMIT: 0.00
   SET
   OPS:
   JPM_ECL_FDS_CABIN_SD_A_THOLD_SET_TMPLT
   PUI: JSEF96IM0027K

   GMT _____:_____:_____ (HR:MIN:SEC)

2. VERIFY: OBS THRESHOLD – 0.00 +/- 0.08 VOLTS
   ENG: PM_CABIN_SD_A OBSCURATION T/H
   PUI: JSDC00FCE719V

RELEASED - Printed documents may be obsolete; validate prior to use.

SECTION IV - OPERATION INSTRUCTIONS

SEQ/STEP	CMD	RESP	DESCRIPTION	VERIF.
115-151	KECL	MS1	PCS JPM:ECLSS:SD A JPM CABIN SMOKE DETECTOR A 'THRESHOLD' 1. CMD: THRESHOLD PARAMETER 1: OBS THRESHOLD: 0.50 PARAMETER 2: OBS HI RAIL: 4.60 PARAMETER 3: OBS LOW RAIL: -4.50 PARAMETER 4: SCTR THRESHOLD: 2.00 PARAMETER 5: SCTR LOW RAIL: -0.50 PARAMETER 6: LENS CONTAM LOW LIMIT: 0.00 SET OPS: JPM_ECL_FDS_CABIN_SD_A_THOLD_SET_TMPLT PUI: JSEF96IM0027K GMT _____:_____:_____ (HR:MIN:SEC) VERIFY: 2. OBS THRESHOLD – 0.50 +/- 0.08 VOLTS ENG: PM_CABIN_SD_A OBSCURATION T/H PUI: JSDC00FCE719V 3. SCTR THRESHOLD – 2.00 +/- 0.08 VOLTS ENG: PM_CABIN_SD_A SCATTER T/H PUI: JSDC00FCE71AV	

RELEASED - Printed documents may be obsolete; validate prior to use.

SECTION IV - OPERATION INSTRUCTIONS

SEQ/STEP	CMD	RESP	DESCRIPTION	VERIF.
			CHECK CABIN SD A STATUS	
115-152	KECL	MS1	PCS JPM:ECLSS:SD A JPM CABIN SMOKE DETECTOR A 'ACTIVE BIT' 1. CMD: STATUS RESET OPS: JPM_ECL_FDS_CABIN_SD_A_BIT_STAT_RST PUI: JSEF96IM0028K GMT _____:_____:_____ (HR:MIN:SEC) 2. VERIFY: STATE - INVALID ENG: PM_CABIN_SD_A BIT STATUS PUI: JSDC00FCE715J	
115-153	KECL	MS1	PCS JPM:ECLSS:SD A JPM CABIN SMOKE DETECTOR A 'ACTIVE BIT' 1. CMD: INITIATE OPS: JPM_ECL_FDS_CABIN_SD_A_BIT_START PUI: JSEF96IM0029K GMT _____:_____:_____ (HR:MIN:SEC) VERIFY: 2. STATE - VALID ENG: PM_CABIN_SD_A BIT STATUS PUI: JSDC00FCE715J 3. FAILURE - 'BLANK' ENG: PM_CABIN_SD_A BIT RESULT PUI: JSDC00FCE714J	

RELEASED - Printed documents may be obsolete; validate prior to use.

SECTION IV - OPERATION INSTRUCTIONS

SEQ/STEP	CMD	RESP	DESCRIPTION	VERIF.
115-154	KECL	MS1	PCS JPM:ECLSS:SD A: JPM CABIN SMOKE DETECTOR A 'MONITORING' 1. CMD: ENABLE OPS: JPM_ECL_FDS_CABIN_SD_A_MONITOR_START PUI: JSEF96IM0024K GMT _____:_____:_____ (HR:MIN:SEC) 2. VERIFY: STATUS - VALID ENG: PM_CABIN_SD_A MONITOR STATUS PUI: JSDC00FCE712J ~OMRSD A3000MI.100-E (ECLSS SMOKE DETECTOR A) **CONFIGURE JEM IMV-A VALVE AND FAN**	
115-155	KECL	MS1	PCS JPM:ECLSS:IMV STBD FWD VLV:PIB A1 SWITCH DETAILS PIB A1 SWITCH DETAILS '120V/0.5A' 1. CMD: SWITCH 8 (JPM IMV STBD FWD VLV A) - CLOSE OPS: JPM_EPS_PIB_A1_120V_L_SW08_(JPMIMVSTBDFWDV LVA)_CL PUI: JSPX96IM0640K GMT _____:_____:_____ (HR:MIN:SEC) 2. VERIFY: SWITCH 8 (JPM IMV STBD FWD VLV A) POSN – CL ENG: PIB_A1 120V_L SW8 POWER STATUS PUI: JSDC00FCPC27J	

RELEASED - Printed documents may be obsolete; validate prior to use.

SECTION IV - OPERATION INSTRUCTIONS

SEQ/STEP	CMD	RESP	DESCRIPTION	VERIF.
115-156	KECL	MS1	PCS JPM:ECLSS:IMV STBD FWD VLV JPM IMV VALVES 'IMV STBD FWD VALVE' 1. CMD: POSITION - OPEN OPS: JPM_ECL_IMV_STBD_FWD_VLV_A_POSN_OP PUI: JSET96IM0007K GMT _____:_____:_____ (HR:MIN:SEC) 2. CMD: VALVE ENABLE - ENABLE OPS: JPM_ECL_IMV_STBD_FWD_VLV_A_ENA PUI: JSET96IM0009K GMT _____:_____:_____ (HR:MIN:SEC) **NOTE** VALVE TRANSITION MAY TAKE APPROXIMATELY 35 SECONDS. VERIFY: 3. VALVE POSITION (STACK) – OPEN ENG: JEM_IMV_SUPPLY_VALVE STACK POSTN PUI: JSDC00SWE341J 4. SWITCH 8 POSN – OP ENG: PIB_A1 120V_L SW8 POWER STATUS PUI: JSDC00FCPC27J ~OMRSD A3000MI.100-E (ECLSS IMV VALVE A) **NOTE** PERFORM THIS STEP IF THE CAP OF THE IMV STBD FWD VALVE IS INSTALLED.	
115-157	KECL	KFWT DKQN	REMOVE FLIGHT CAP FROM STBD FWD IMV VALVE. BAG AND TAG CAP TO PRESERVE CLEANLINESS.	

TNW:_____

NOT PERFORMED:_____

RELEASED - Printed documents may be obsolete; validate prior to use.

SECTION IV - OPERATION INSTRUCTIONS

SEQ/STEP	CMD	RESP	DESCRIPTION	VERIF.

NOTE

WHEN THIS STEP EXECUTES, PDB_EPS1 RPC4 TRIP STATUS INDICATES ‘ABNORMAL’ ONLY FOR A MOMENT AND PDB_EPS1 HEALTH STATUS SUMMARY INDICATES ‘ERROR’.

115-158 KECL MS1

PCS
JPM:ECLSS:IMV STBD FWD FAN:PDB EPS1 RPC DETAILS
PDB EPS1 RPC DETAILS

‘PDB EPS1’

1. CMD: RPC 4 (JPM IMV STBD FWD FAN A) - CLOSE
   OPS: JPM_EPS_PDB_A_EPS1_RPC04_(JPM_IMV_STBD_FWD_FAN_A)_CL
   PUI: JSPX96IM0538K

   GMT _____:_____:_____ (HR:MIN:SEC)

2. VERIFY: RPC 4 (JPM IMV STBD FWD FAN A)
   POSN – CL
   ENG: PDB_EPS1 RPC4 POWER STATUS
   PUI: JSDC00FCP70FJ

115-159 KECL MS1

PCS
JPM:ECLSS:IMV STBD FWD FAN
JPM IMV FANS

‘IMV STBD FWD FAN’

RECORD: SPEED - _____ (BD)
ENG: JEM_IMV_SUPPLY_FAN REV
PUI: JSDC00FCE120R

RELEASED - Printed documents may be obsolete; validate prior to use.

SECTION IV - OPERATION INSTRUCTIONS

SEQ/STEP	CMD	RESP	DESCRIPTION	VERIF.
115-160	KECL	MS1	PCS JPM:ECLSS:IMV STBD FWD FAN JPM IMV FANS 'IMV STBD FWD FAN' 1. CMD: ON OPS: JPM_ECL_IMV_STBD_FWD_FAN_A_START PUI: JSET96IM0004K GMT _____:_____:_____ (HR:MIN:SEC) (RECORD IN APPENDIX G) 2. VERIFY/RECORD: SPEED – _____RPM (7745 – 9750 RPM) ENG: JEM_IMV_SUPPLY_FAN REV PUI: JSDC00FCE120R ~OMRSD A3000MI.100-E (ECLSS IMV FAN SPEED A)	
115-161	KECL	SSFE	CES MATE LOAD AND RUN MATE SCRIPT MEIT3_MATE_CMDS INDEX: 0X005E CMD: JPM_CDH_ACTIVE_JCP_EVENT_DET_ENA_TMPLT OPS: JPM_CDH_ACTIVE_JCP_EVENT_DET_ENA_TMPLT PUI: JSDD96IM0227K PARAMETER: 454 (JEM IMV SUPPLY FAN ROTATIONAL RATE OUT OF LIMIT) GMT _____:_____:_____ (HR:MIN:SEC)	
115-162	KECL		TCMS:A-STRING VERIFY: IMV SUPPLY FAN (STBD FWD) ROTATIONAL RATE OUT OF LIMIT EVENT FLAG – ENABLE ENG: EVENT INHIBIT FLAG(JEM IMV SUPPLY FAN ROTATIONAL RATE OUT OF LIMIT) PUI: JSDC00SWZ38AJ	
115-163	KEPS	MS1	PCS JPM:EPS:PDB_EPS1 PDB EPS1 RPC DETAILS RECORD HEALTH STATUS SUMMARY: _____ ENG: PDB_EPS1 HEALTH STATUS SUMMARY PUI: JSDC00FCP700J	

RELEASED - Printed documents may be obsolete; validate prior to use.

SECTION IV - OPERATION INSTRUCTIONS

SEQ/STEP	CMD	RESP	DESCRIPTION	VERIF.
115-164	KEPS	MS1	CES MATE LOAD AND RUN MATE SCRIPT MEIT3_MATE_CMDS INDEX: 0X008F 'PDB A BIT CMD' CMD: PDB_EPS1_RST_BIT_STAT ENG: JPM_EPS_PDB_A_EPS1_BIT_STAT_RST PUI: JSPX96IM0560K EXECUTE: GMT _____:_____:_____ (HR:MIN:SEC)	
115-165	KEPS		PCS JPM:EPS:PDB EPS1 'PDB EPS1 RPC DETAILS' HEALTH STATUS SUMMARY – BLANK (NORMAL) PUI: JSDC00FCP700J ENG: PDB_EPS1 HEALTH STATUS SUMMARY	

RELEASED - Printed documents may be obsolete; validate prior to use.

SECTION IV - OPERATION INSTRUCTIONS

SEQ/STEP	CMD	RESP	DESCRIPTION	VERIF.

RECONFIGURE THC_A RUN STATE

115-166 KECL MS1

PCS
JPM_ECLSS:THC A:THC A COMMANDS
JPM THC A COMMANDS

'THC A'

1. CMD: OPS MODE - HIGH
   OPS: JPM_ECL_THC_A_OPS_MODE_HI
   PUI: JSET96IM0025K

   GMT _____:_____:_____ (HR:MIN:SEC)

NOTE

IT TAKES APPROXIMATELY 95 SECONDS FOR THE THC A TO TRANSFER FROM MANUAL TO HIGH MODE.

VERIFY/RECORD:

2. OPS MODE – HIGH
   ENG: THC_A RUN STATUS
   PUI: JSDC00FCEA0XJ

3. FAN SPEED - _____ RPM (6469 - 7920 RPM)
   ENG: THC_A CABIN FAN SPEED CURRENT
   PUI: JSDC00FCEA02R

~OMRSD A3000MI.100-E (ECLSS THC A)

115-167 KECL MS1

PCS
JPM:ECLSS
JPM ECLSS

'CABIN TEMP

VERIFY/RECORD: THC A CABIN TEMP SETPOINT - _____ DEG C (22.5 DEG C)
ENG: PM_CABIN_TEMP_SETUP_VALUE_A
PUI: JSDC00FCEA1KT

RELEASED - Printed documents may be obsolete; validate prior to use.

SECTION IV - OPERATION INSTRUCTIONS

SEQ/STEP	CMD	RESP	DESCRIPTION	VERIF.
115-168	KECL	MS1	PCS JPM:ECLSS:THC A:THC A COMMANDS JPM THC A COMMANDS 'STATUS' VERIFY: 1. HEALTH STAT SUMM - NORMAL ENG: THC_A HEALTH STATUS SUMMARY STACK PUI: JSDC00FCEA0GJ 2. THCU HEALTH STAT - NORMAL ENG: THC_A CNTLR HEALTH STATUS STACK PUI: JSDC00FCEA05J 3. FAN HEALTH STAT - NORMAL ENG: THC_A CABIN FAN HEALTH STATUS STACK PUI: JSDC00FCEA06J 4. WS HEALTH STAT - NORMAL ENG: THC_A WATER SEPARATOR HEALTH STATUS STACK PUI: JSDC00FCEA08J 5. TCV HEALTH STAT - NORMAL ENG: THC_A TEMP CNTRL VALVE HEALTH STATUS STACK PUI: JSDC00FCEA0AJ 6. CHX HEALTH STAT - NORMAL ENG: THC_A CHX HEALTH STATUS STACK PUI: JSDC00FCEA09J 7. HEPA FILTER HEALTH STAT - NORMAL ENG: THC_A PARTICLE FILTER HEALTH STATUS STACK PUI: JSDC00FCEA07J	

RELEASED - Printed documents may be obsolete; validate prior to use.

SECTION IV - OPERATION INSTRUCTIONS

SEQ/STEP	CMD	RESP	DESCRIPTION	VERIF.
115-169	KECL		TCMS:THC A VERIF: SENSORS HEALTH STATUS (STACK) – NORMAL ENG: THC_A SENSORS HEALTH STATUS STACK PUI: JSDC00FCEA0BJ **ENABLE EVENT DETECTION (THC A)**	
115-170	KECL	SSFE	CES MATE LOAD AND RUN MATE SCRIPT MEIT3_MATE_CMDS INDEX: 0X0061 CMD: THC A CABIN FAN ROTATIONAL RATE LOW EVENT DETECTION - ENABLE OPS: JPM_CDH_ACTIVE_JCP_EVENT_DET_ENA_TMPLT PUI: JSDD96IM0227K PARAMETER: 514 (THC_A CABIN FAN ROTATIONAL RATE LOW) GMT _____:_____:_____ (HR:MIN:SEC)	
115-171	KECL		TCMS:THC-A VERIF: ROTATIONAL RATE LOW EVENT FLAG – ENABLE ENG: EVENT INHIBIT FLAG(THC_A CABIN FAN ROTATIONAL RATE LOW) PUI: JSDC00SWZ3BNJ **RECONFIGURE LTL LOOP**	
115-172	KTCS	MS1	PCS JPM:EPS:PIB A1 PIB A1 SWITCH DETAILS '120V/0.5A' 1. CMD: SW13(LTL BYP LINE FCV A) - CLOSE ENG: POWER_ON PIB_A1_120V_L_SW13 PUI: JSTE96IM0124K GMT _____:_____:_____ (HR:MIN:SEC) 2. VERIF: SW13 POSN – CL OPS: PIB_A1 120V_L SW13 POWER STATUS PUI: JSDC00FCPC2CJ	

RELEASED - Printed documents may be obsolete; validate prior to use.

SECTION IV - OPERATION INSTRUCTIONS

SEQ/STEP	CMD	RESP	DESCRIPTION	VERIF.
115-173	KTCS	MS1	PCS JPM:TCS:JPM ATCS LTL 'JPM ATCS LTL' 'LTL' 'BYPASS FCV A' 1. ENTER: VALVE POSN – 38 DEG 2. CMD: VALVE POSN - SET ENG: JPM_ATCS_LTL_BYP_LINE_FCV_A_POSN_SET_TMPLT PUI: JSTE96IM0277K GMT _____:_____:_____ (HR:MIN:SEC)	
115-174	KTCS	MS1	PCS JPM:TCS:JPM ATCS LTL 'JPM ATCS LTL' 'LTL' 'BYPASS FCV A' VERIFY: PIB_A1 120V_L SW13 POSN – OP OPS: PIB_A1 120V_L SW13 POWER STATUS PUI: JSDC00FCPC2CJ **START CHX H2O SUPPLY**	
115-175	KTCS	MS1	PCS JPM:EPS:PIB A1 PIB A1 SWITCH DETAILS '120V/0.5A' 1. CMD: SW10 (LTL THC A CHX FCV A) - CLOSE ENG: POWER_ON PIB_A1_120V_L_SW10 PUI: JSTE96IM0121K GMT _____:_____:_____ (HR:MIN:SEC) 2. VERIFY: SW10 POSN - CL OPS: PIB_A1 120V_L SW10 POWER STATUS PUI: JSDC00FCPC29J	

RELEASED - Printed documents may be obsolete; validate prior to use.

SECTION IV - OPERATION INSTRUCTIONS

SEQ/STEP	CMD	RESP	DESCRIPTION	VERIF.
115-176	KTCS	MS1	PCS JPM:TCS:JPM ATCS LTL 'JPM ATCS LTL' 'LTL' 'THC A CHX FCV' 1. ENTER: VALVE POSN – 43 DEG 2. CMD: VALVE POSN - SET ENG: JPM_ATCS_LTL_THC_A_HX_FCV_A_POSN_SET_TMPLT PUI: JJSTE96IM0276K GMT _____:_____:_____ (HR:MIN:SEC)	
115-177	KTCS	MS1	PCS JPM:TCS:JPM ATCS LTL 'JPM ATCS LTL' 'LTL' 'THC A CHX FCV' VERIFY: PIB_A1 120V_L SW10 POSN – OP OPS: PIB_A1 120V_L SW10 POWER STATUS PUI: JSDC00FCPC29J **SET TCA_L PUMP REVOLUTION**	
115-178	KTCS	MS1	PCS JPM:TCS:JPM ATCS LTL 'JPM ATCS LTL' 'TCA L' 'PUMP' 1. ENTER: SPEED SET – 7000 RPM 2. CMD: SPEED SET - SET ENG: JPM_ATCS_TCA_L_PUMP_A_SPD_SET_TMPLT PUI: JSTE96IM0305K GMT _____:_____:_____ (HR:MIN:SEC)	

RELEASED - Printed documents may be obsolete; validate prior to use.

SECTION IV - OPERATION INSTRUCTIONS

SEQ/STEP CMD RESP DESCRIPTION VERIF.

NOTE

IN THE FOLLOWING STEP, PUMP DIFF PRESS AND TOTAL FLOW SHALL BE VERIFIED BY KTCS AND NASDA ACCORDING TO APPENDIX M FIGURE M-2(TCA-L) IN APPENDIX-M

115-179 KTCS MS1 PCS
JPM:TCS:JPM ATCS LTL
'JPM ATCS LTL'

RECORD/VERIFY THE FOLLOWING POST ACTIVATION PARAMETERS:

NOMENCLATURE	ACTUAL VALUE	EXPECTED VALUE	PUI
TCA L PUMP SPEED		7000 +/-329 RPM	JSDC00FCTA1WR
TCA L WATER VOL 1		0.66-4.7 L	JSDC00FCTA02Q
TCA L WATER VOL 2		0.66-4.7 L	JSDC00FCTA03Q
TCA L PUMP DP		IN OPERATIONAL VALUE (REF APPENDIX M FIGURE M-2)	JSDC00FCTA1VP
TCA L PUMP OUT FLOW RATE		IN OPERATIONAL VALUE (REF APPENDIX M FIGURE M-2)	JSDC00FCTA0ZR
LTL THC A CHX FLOW RATE		> 225 KG/H	JSDC00FCT1E0R
LTL BYPASS FLOW RATE A		(BD)	JSDC00FCT1F0R

115-180 KTCS MS1 PCS
JPM:TCS
JPM ATCS OVERVIEW

'LOOP'

VERIFY/RECORD THE FOLLOWING TELEMETRY:

NOMENCLATURE	ACTUAL VALUE	EXPECTED VALUE	PUI
LTL LOOP DP		> 51.6 KPA	JSDC00FCT020P
MTL LOOP DP		> 51.6 KPA	JSDC00FCT000P

RELEASED - Printed documents may be obsolete; validate prior to use.

SECTION IV - OPERATION INSTRUCTIONS

SEQ/STEP	CMD	RESP	DESCRIPTION	VERIF.
			SET JPM CABIN TEMP	
115-181	KECL	MS1	PCS JPM:ECLSS JPM ECLSS 'CABIN TEMP' 1. ENTER - 23.0 DEGREES C CMD: SET OPS: JPM_ECL_THC_CABIN_TEMP_SET_TMPLT PUI: JSET96IM0064K GMT _____:_____:_____ (HR:MIN:SEC) 2. VERIFY: THC A CABIN TEMP SET – 23.0 DEGREES C ENG: PM_CABIN_TEMP_SETUP_VALUE_A PUI: JSDC00FCEA1KT	
			NOTE PERFORM THE FOLLOWING STEPS PER TASK LEADER DIRECTION TO SUPPORT TEST.	
115-182	PTC	KEPS DKQM	PERFORM JEM UOP PANEL ACTIVATION PER R2009 SEQUENCE 03 OPTION D FOR UOP-A3FD6. REPORT COMPLETE. START GMT _____:_____:_____ (DAY:HR:MIN) COMPLETE GMT _____:_____:_____ (DAY:HR:MIN)	

NV:_____

NOT PERFORMED:_____

RELEASED - Printed documents may be obsolete; validate prior to use.

SECTION IV - OPERATION INSTRUCTIONS

SEQ/STEP	CMD	RESP	DESCRIPTION	VERIF.
115-183	PTC	KCDH DKQM	PERFORM SLT ACTIVATION PER R2009 SEQUENCE 05. REPORT COMPLETE. START GMT _____:_____:_____ (DAY:HR:MIN COMPLETE GMT _____:_____:_____ (DAY:HR:MIN)	NV:_____ NOT PERFORMED:_____

NOTE

PEFORM THE FOLLOWING STEP IF A USOS PCS IS CONNECTED AND REQUIRED IN THE JEM MODULE.

115-184	PTC	KCDH DKQM	PERFORM SEQUENCE 08 FLIGHT PCS ACTIVATION PER R2009. REPORT COMPLETE. START GMT _____:_____:_____ (DAY:HR:MIN COMPLETE GMT _____:_____:_____ (DAY:HR:MIN)	NV:_____ NOT PERFORMED:_____
115-185	TIE PTC 052	PTC DKQM	JEM A STRING ACTIVATION (JCP-A PRIMARY) COMPLETE. GMT _____:_____:_____ (DAY:HR:MIN)	NV:_____

RELEASED - Printed documents may be obsolete; validate prior to use.

SECTION IV - OPERATION INSTRUCTIONS

SEQ/STEP	CMD	RESP	DESCRIPTION	VERIF.
116-000			**CDH BUS REDUNDANCY, CB-EXT-1, AND CBM CHECKS**	
116-001	PTC	DKQM	RECORD THE FOLLOWING INFORMATION: GMT _____:_____:_____ (DAY:HR:MIN) NV:_____	
116-002	TIE 052		RECORD THE ACTUAL STATE FOR THE FOLLOWING EQUIPMENT	

SYSTEM/ORU	REQUIRED STATE	ACTUAL STATE
JCP-A	OPERATIONAL	
PCS ON CB EXT-1	CONNECTED	
DIU-EPS1	OPERATIONAL	
JEM CBM CPAS	OFF	
PASS-1000 ON CB-EXT-1 CHANNELS A AND B	CONNECTED/ON	

RELEASED - Printed documents may be obsolete; validate prior to use.

SECTION IV - OPERATION INSTRUCTIONS

SEQ/STEP	CMD	RESP	DESCRIPTION	VERIF.

NOTE

PERFORM THE FOLLOWING STEP TO CONFIGURE FOR SYSTEM TESTING IF REQUIRED.

116-003 TIE DKQM

SEQUENCE TITLE	PROCEDURE	SEQUENCE #	START GMT	STOP GMT

NV:_____

NOT PERFORMED:_____

RELEASED - Printed documents may be obsolete; validate prior to use.

SECTION IV - OPERATION INSTRUCTIONS

SEQ/STEP	CMD	RESP	DESCRIPTION	VERIF.
			NOTE PERFORM THE FOLLOWING STEP IF IS NECESSARY TO CONNECT THE USOS SYSTEM PCS (DATA AND POWER CABLE) IN THE JEM MODULE ON UOP_A3_FD6. OTHERWISE, TAKE A 'NOT PERFORMED'	
116-004	KCDH	MS1 DKQM	PERFORM R2009 OPERATION SUPPORT SETUP SEQUENCE 01, CONNECT USOS PCS LAPTOP TO JEM UTILITY OUTLET PANEL. REPORT COMPLETE. START GMT _____:_____:_____ (DAY:HR:MIN) COMPLETE GMT _____:_____:_____ (DAY:HR:MIN)	NV:_____ NOT PERFORMED:_____
			NOTE PERFORM THE FOLLOWING STEP IF IT IS NECESSARY TO POWER ON THE JEM UOP_A3_FD6 UOP. OTHERWISE TAKE A 'NOT PERFORMED'.	
116-005	KCDH	MS1 DKQM	PERFORM R2009 OPERATION SUPPORT SETUP SEQUENCE 03, JEM UOP PANEL ACTIVATION. REPORT COMPLETE. START GMT _____:_____:_____ (DAY:HR:MIN) COMPLETE GMT _____:_____:_____ (DAY:HR:MIN)	NV:_____ NOT PERFORMED:_____

RELEASED - Printed documents may be obsolete; validate prior to use.

SECTION IV - OPERATION INSTRUCTIONS

SEQ/STEP	CMD	RESP	DESCRIPTION	VERIF.
			NOTE PERFORM THE FOLLOWING STEP IF IT IS NECESSARY TO ACTIVATE THE USOS SYSTEM PCS.	
116-006	KCDH	MS1 DKQM	PERFORM R2009 OPERATION SUPPORT SETUP SEQUENCE 08, FLIGHT PCS ACTIVATION. REPORT COMPLETE. START GMT _____:_____:_____ (DAY:HR:MIN) COMPLETE GMT _____:_____:_____ (DAY:HR:MIN)	NV:_____ NOT PERFORMED:_____
116-007	KCDH	MS1	VERIFY THAT THE USOS SYSTEM PCS LOCATED INSIDE JEM MODULE CONNECTED TO UOP A3_FD6 IS POWERED AND OPERATIONAL.	
116-008	KCDH	MS1	PCS JPM:CDH:CB-EXT-1:BUS STATUS 'CB-EXT-1 BUS STATUS' RECORD ACTIVE CHANNEL: _____ PUI: LADP01MDAWA7J	

RELEASED - Printed documents may be obsolete; validate prior to use.

SECTION IV - OPERATION INSTRUCTIONS

SEQ/STEP	CMD	RESP	DESCRIPTION	VERIF.

NOTE

IF CHANNEL 'A' IS NOT THE ACTIVE CHANNEL ON CB-EXT-1 BUS, PERFORM THE FOLLOWING STEP. OTHERWISE, TAKE A 'NOT PERFORMED'.

116-009 KCDH MS1 PCS
JPM:CDH:CB-EXT-1:BUS STATUS

'CB-EXT-1 BUS STATUS'

1. CMD: SELECT CH A
   PUI: LADD96IM0587K
   EXECUTE

   GMT _____:_____:_____ (HR:MIN:SEC)

2. VERIFY: CHANNEL SELECTED – A
   PUI: LADP01MDAWA7J

NOT PERFORMED:_____

116-010 KCDH MS1 PCS
JPM:CDH:CB-EXT-1:BUS STATUS

'CB-EXT-1 BUS STATUS'

1. CMD: AUTO CHANNEL SWITCH STATUS - INHIBIT
   PUI: LADD96IM0586K
   EXECUTE

   GMT _____:_____:_____ (HR:MIN:SEC)

2. VERIFY: AUTO CHANNEL SWITCH STATUS – INH
   PUI: LADP01MDAWABJ

116-011 KCDH MS1 PCS

JPM:CDH:CB-EXT-1:RT STATUS

'CB-EXT-1 RT FDIR STATUS'

1. RECORD THE RT FDIR STATUS FOR THE FOLLOWING RTS.

   RT 15 JEM ZENITH CBM(PRI) _____
   PUI: LADP01MDAVXFJ
   RT 18 JEM DIU-EPS1 _____
   PUI: LADP01MDZVX6J
   RT 19 JCP-A _____
   PUI: LADP01MDZVWXJ

RELEASED - Printed documents may be obsolete; validate prior to use.

SECTION IV - OPERATION INSTRUCTIONS

SEQ/STEP	CMD	RESP	DESCRIPTION	VERIF.

NOTE

PERFORM THE FOLLOWING STEP IF IT IS NECESSARY TO 'ENABLE' THE RT FDIR STATUS FOR A JEM RT CURRENTLY 'INHIBITED' IN THE ABOVE STEP.

116-012 KCDH MS1 PCS
JPM:CDH:CB-EXT-1:RT STATUS

'CB-EXT-1 RT FDIR STATUS'

1. CMD: ENABLE FDIR
   PUI: LADD96IM0769K
   EXECUTE

   GMT _____:_____:_____ (HR:MIN:SEC)

2. VERIFY: RT FDIR STATUS - ENA

3. RECORD RT NAME(S) THAT WERE ENABLED IN THIS STEP:
   _____

   GMT _____:_____:_____ (DAY:HR:MIN)

NOT PERFORMED:_____

ACTVATE JEM CBM PRIMARY CONTROLLERS:

116-013 KCDH MS1 PCS
JPM:JEM S&M:PDB A2

'PDB A2 RPC DETAILS'

1. CMD: RPC4 JPM/JLP CBM CNTLR – CLOSE
   ENG: JPM_EPS_PDB_A2_RPC04
   PUI: JSPX96IM0460K
   EXECUTE

   GMT _____:_____:_____ (HR:MIN:SEC)

2. VERIFY: RPC4 POSN - CL
   ENG: PDB_A2 RPC4 POWER STATUS
   PUI: JSDC00FCP20FJ

RELEASED - Printed documents may be obsolete; validate prior to use.

SECTION IV - OPERATION INSTRUCTIONS

SEQ/STEP	CMD	RESP	DESCRIPTION	VERIF.

NOTE

EACH JEM CPA IS CONNECTED TO A SPECIFIC BUS CHANNEL ON THE CB-EXT-1 BUS. IN THE FOLLOWING TEST PROCEDURE, CPA1 IS CONNECTED TO CHANNEL A AND CPA4 IS CONNECTED TO CHANNEL B.

116-014 KCDH MS1

PCS
JPM:JEM S&M:PREP FOR MATE

'JEM ZENITH CBM PREP FOR MATE'

CMD: ACTIVATE CB-EXT-1 MASTER CONTROLLER (CPA1)
PUI: LAMC96IM0260K
EXECUTE

GMT _____:_____:_____ (HR:MIN:SEC)

NOTE

WAIT A MINIMUM OF 10 SECONDS BEFORE PERFORMING VERIFICATIONS. NUMEROUS COMMAND STATUSES OF 'NO BROADCAST' MAY BE INDICATED ON PCS CBM DISPLAY (POWERED BOLT STATUS, AND CAPTURE LATCH STATUS).

116-015 KCDH MS1

JPM:JEM S&M
'JEM ZENITH CBM'

VERIFY:
'CBM STATUS'
1. MODE – ACTIVE
   ENG: CBM MODE
   PUI: LADP01MDD4TTJ

2. MASTER – CB-EXT-1
   ENG: CBM MASTER CONTROLLER STATE
   PUI: LADP01MDD4TRJ

3. COMM ERROR – NO X

4. MASTER CMD STATUS – COMPLETE

5. 485 TIMEOUT – NO X

RELEASED - Printed documents may be obsolete; validate prior to use.

SECTION IV - OPERATION INSTRUCTIONS

SEQ/STEP	CMD	RESP	DESCRIPTION	VERIF.
116-016	KCDH	MS1	JPM:JEM S&M:BUILT IN TEST FAILURES JEM CBM BUILT IN TEST FAILURES – NO X ~OMRSD A3000MS.100-A (CPA1 POWERED/ACTIVATED)	
116-017	KCDH	MS1	PCS JPM:CDH:CB-EXT-1:RT STATUS 'CB-EXT-1 RT STATUS' RECORD THE 'RT STATUS' I/O (ENA/INH) FOR THE FOLLOWING RT ADDRESSES AND NAMES 15 JEM ZENITH CBM(PRI) _____ 18 JEM DIU-EPS1 _____ 19 JCP-A _____	 LADP01MDAVXBJ LADP01MDAVX2J LADP01MDZVWTJ
			NOTE PERFORM THE FOLLOWING STEP IF IT IS NECESSARY TO 'ENABLE' RT 18 JEM DIU-EPS1 RT STATUS I/O. OTHERWISE TAKE A NOT PERFORMED.	
116-018	KCDH	MS1	PCS JPM:CDH:CB-EXT-1:RT STATUS 'CB-EXT-1 RT STATUS' 1. CMD: RT STATUS I/O FOR RT 18 DIU-EPS1 - ENABLE PUI: LADD96IM1018K EXECUTE 2. VERIFY RT 18 DIU-EPS1 RT STATUS I/O – ENA PUI: LADP01MDAVX2J GMT _____:_____:_____ (HR:MIN:SEC)	
				NOT PERFORMED:_____

RELEASED - Printed documents may be obsolete; validate prior to use.

SECTION IV - OPERATION INSTRUCTIONS

SEQ/STEP	CMD	RESP	DESCRIPTION	VERIF.
			NOTE IN THE FOLLOWING STEP, A 'GOOD POLLING RESPONSE' IS DEFINED AS THE RESPONSE FROM THE REMOTE TERMINAL IS WITHOUT ERROR. THIS IS VERIFIED WITH A PASS-1000, WHICH SHOWS NO ERRORS WITH A GREEN BAR FOR EACH RT. PASS OPERATOR WILL ALSO VERIFY THAT THE PASS-1000 BUS ERROR COUNTER IS NOT INCREMENTING. ANY RED OR YELLOW INDICATIONS SHOULD BE REPORTED TO KCDH.	
			NOTE THE PCS WILL BE ASSIGNED RT #1, 2, 3, 4 OR 5 BASED ON HOW MANY OTHER PCS ARE ACTIVE ON CB-EXT-1 BUS.	
116-019	KCDH	SCDH	PASS-1000 VERIFY: FOLLOWING RTS WITH I/O ENABLED HAVE A GOOD POLLING RESPONSE (I.E. GREEN BAR) ON THE CB-EXT-1 BUS. RECORD N/A FOR RTS WITH I/O INHIBITED. RT 15 JEM ZENITH CBM(PRI) _____ RT 18 JEM DIU EPS1 _____ RT 19 JCP-A _____ RT __ PCS IN JEM _____	
116-020	KCDH	MS1	PCS JPM:CDH:CB-EXT-1:BUS STATUS 'CB-EXT-1 BUS STATUS' 1. RECORD BUS ERROR COUNTER: _____ PUI: LADP01MDAWBUU 2. VERIFY: BUS ERROR COUNTER – NOT INCREMENTING 3. RECORD CHANNEL SWITCH COUNTER: _____ PUI: LADP01MDAWA6U	

RELEASED - Printed documents may be obsolete; validate prior to use.

SECTION IV - OPERATION INSTRUCTIONS

SEQ/STEP	CMD	RESP	DESCRIPTION	VERIF.

NOTE

THE C&C MDM WILL STOP POLLING THE CPA WHEN IT IS DEACTIVATED.

116-021 KCDH MS1 PCS
JPM:JEM S&M:PREP FOR MATE
'JEM ZENITH CBM PREP FOR MATE'

1. CMD: DEACTIVATE (CPA1)
   PUI: LAMC96IM0262K
   EXECUTE

2. VERIFY: MODE – INACTIVE
   ENG: CBM MODE
   PUI: LADP01MDD4TTJ

3. VERIFY: MASTER - NONE

116-022 KCDH MS1 PCS
JPM:CDH:CB-EXT-1:BUS STATUS

'CB-EXT-1 BUS STATUS'

1. CMD: SELECT CH B
   PUI: LADD96IM0587K
   EXECUTE

   GMT _____:_____:_____ (HR:MIN:SEC)

2. VERIFY: CHANNEL SELECTED – B
   PUI: LADP01MDAWA7J

3. RECORD CHANNEL SWITCH COUNTER: _____
   PUI: LADP01MDAWA6U

4. VERIFY: CHANNEL SWITCH COUNTER INCREMENTED BY ONE.

RELEASED - Printed documents may be obsolete; validate prior to use.

SECTION IV - OPERATION INSTRUCTIONS

SEQ/STEP	CMD	RESP	DESCRIPTION	VERIF.
116-023	KCDH	MS1	PCS JPM:JEM S&M:PREP FOR MATE 'JEM ZENITH CBM PREP FOR MATE' CMD: ACTIVATE CB-EXT-1 MASTER CONTROLLER (CPA4) PUI: LAMC96IM0260K EXECUTE GMT _____:_____:_____ (HR:MIN:SEC) **NOTE** WAIT A MINIMUM OF 10 SECONDS BEFORE PERFORMING VERIFICATIONS. NUMEROUS COMMAND STATUSES OF 'NO BROADCAST' MAY BE INDICATED ON PCS CBM DISPLAY (POWERED BOLT STATUS, AND CAPTURE LATCH STATUS).	
116-024	KCDH	MS1	JPM:JEM S&M 'JEM ZENITH CBM' VERIFY: 'CBM STATUS' 1. MODE – ACTIVE ENG: CBM MODE PUI: LADP01MDD4TTJ 2. MASTER – CB-EXT-1 ENG: CBM MASTER CONTROLLER STATE PUI: LADP01MDD4TRJ 3. COMM ERROR – NO X 4. MASTER CMD STATUS – COMPLETE 5. 485 TIMEOUT – NO X	
116-025	KCDH	MS1	JPM:JEM S&M:BUILT IN TEST FAILURES JEM CBM BUILT IN TEST FAILURES – NO X ~OMRSD A3000MS.100-A (CPA4 POWERED/ACTIVATED)	

RELEASED - Printed documents may be obsolete; validate prior to use.

SECTION IV - OPERATION INSTRUCTIONS

SEQ/STEP	CMD	RESP	DESCRIPTION	VERIF.
116-026	KCDH	MS1	PCS JPM:CDH:CB-EXT-1:BUS STATUS 1. RECORD BUS ERROR COUNTER: _____ PUI: LADP01MDAWBUU 2. VERIFY BUS ERROR COUNTER NOT INCREMENTING **NOTE** WAIT A MINIMUM OF 3 MINUTES.	
116-027	KCDH	SCDH	PASS-1000 VERIF: GOOD POLLING RESPONSE FOR THE FOLLOWING JEM REMOTE TERMINALS WITH I/O ENABLED. (RECORD AN X FOR RTS WITH GOOD POLLING RESPONSE, AND N/A FOR RTS WITH I/O INHIBITED) RT 15 JEM ZENITH CBM(PRI) _____ RT 18 JEM DIU-EPS1 _____ RT 19 JCP-A _____ RT __ USOS PCS IN JEM _____ ~OMRSD A3000MD.100-A (CHANNEL B – GOOD POLLING RESPONSE FROM ACTIVE RTS)	
116-028	KCDH		TCMS(DMON) 'D_M3_EXT_BUS_RT_STATUS' VERIF: 1. DIU-EPS1 DATA FRAME TIME TAG – INCREMENTING ENG: DIU-III-A STATUS/DISCRETE INPUT DATA FRAME TIME TAG PUI: JMDC03FC0011W 2. JCP-A FRAME COUNT – INCREMENTING ENG: FRAME COUNTER PUI: JSDC00SWZ999U	

RELEASED - Printed documents may be obsolete; validate prior to use.

SECTION IV - OPERATION INSTRUCTIONS

SEQ/STEP	CMD	RESP	DESCRIPTION	VERIF.
116-029	KCDH	MS1	PCS JPM:CDH:CB-EXT-1:BUS STATUS 1. RECORD BUS ERROR COUNTER: _____ PUI: LADP01MDAWBUU 2. VERIFY BUS ERROR COUNTER NOT INCREMENTING 3. RECORD CHANNEL SWITCH COUNTER: _____ PUI: LADP01MDAWA6U 4. VERIFY CHANNEL SWITCH COUNTER HAS NOT INCREMENTED. ~OMRSD A3000MD.100-A (CHANNEL B – BUS SWITCHOVER OCCURRED WITHOUT BUS DROPOUTS) **NOTE** THE C&C MDM WILL STOP POLLING THE CPA WHEN IT IS DEACTIVATED.	
116-030	KCDH	MS1	PCS JPM:JEM S&M:PREP FOR MATE 'JEM ZENITH CBM PREP FOR MATE' 1. CMD: DEACTIVATE (CPA4) PUI: LAMC96IM0262K EXECUTE GMT _____:_____:_____ (HR:MIN:SEC) 2. VERIFY: MODE – INACTIVE ENG: CBM MODE PUI: LADP01MDD4TTJ 3. VERIFY: MASTER - NONE	

RELEASED - Printed documents may be obsolete; validate prior to use.

SECTION IV - OPERATION INSTRUCTIONS

SEQ/STEP	CMD	RESP	DESCRIPTION	VERIF.
116-031	KCDH	MS1	PCS JPM:CDH:CB-EXT-1:BUS STATUS 'CB-EXT-1 BUS STATUS' 1. CMD: SELECT CH A PUI: LADD96IM0587K EXECUTE GMT _____:_____:_____ (HR:MIN:SEC) 2. VERIFY: CHANNEL SELECTED – A PUI: LADP01MDAWA7J 3. RECORD CHANNEL SWITCH COUNTER: _____ PUI: LADP01MDAWA6U 4. VERIFY CHANNEL SWITCH COUNTER INCREMENTED BY ONE.	
116-032	KCDH	MS1	PCS JPM:JEM S&M:PREP FOR MATE 'JEM ZENITH CBM PREP FOR MATE' CMD: ACTIVATE CB-EXT-1 MASTER CONTROLLER (CPA1) PUI: LAMC96IM0260K EXECUTE GMT _____:_____:_____ (HR:MIN:SEC)	

RELEASED - Printed documents may be obsolete; validate prior to use.

SECTION IV - OPERATION INSTRUCTIONS

SEQ/STEP	CMD	RESP	DESCRIPTION	VERIF.
			NOTE WAIT A MINIMUM OF 10 SECONDS BEFORE PERFORMING VERIFICATIONS. NUMEROUS COMMAND STATUSES OF 'NO BROADCAST' MAY BE INDICATED ON THE PCS CBM DISPLAY (POWERED BOLT STATUS, AND CAPTURE LATCH STATUS).	
116-033	KCDH	MS1	JPM:JEM S&M 'JEM ZENITH CBM' VERIFY: 'CBM STATUS' 1. MODE – ACTIVE ENG: CBM MODE PUI: LADP01MDD4TTJ 2. MASTER – CB-EXT-1 ENG: CBM MASTER CONTROLLER STATE PUI: LADP01MDD4TRJ 3. COMM ERROR – NO X 4. MASTER CMD STATUS – COMPLETE 5. 485 TIMEOUT – NO X	
116-034	KCDH	MS1	JPM:JEM S&M:BUILT IN TEST FAILURES JEM CBM BUILT IN TEST FAILURES – NO X	
116-035	KCDH	MS1	PCS JPM:CDH:CB-EXT-1:BUS STATUS 1. RECORD BUS ERROR COUNTER: _____ PUI: LADP01MDAWBUU 2. VERIFY BUS ERROR COUNTER NOT INCREMENTING	

RELEASED - Printed documents may be obsolete; validate prior to use.

SECTION IV - OPERATION INSTRUCTIONS

SEQ/STEP	CMD	RESP	DESCRIPTION	VERIF.
			NOTE WAIT A MINIMUM OF 3 MINUTES BEFORE PROCEEDING WITH THE NEXT STEP.	
116-036	KCDH	SCDH	PASS-1000 VERIFY: GOOD POLLING RESPONSE FOR THE FOLLOWING JEM REMOTE TERMINALS WITH I/O ENABLED. (RECORD AN X FOR RTS WITH GOOD POLLING RESPONSE, AND N/A FOR RTS WITH I/O INHIBITED) RT 15 JEM ZENITH CBM (PRI) _____ RT 18 JEM DIU-EPS1 _____ RT 19 JCP-A _____ RT __ USOS PCS IN JEM _____ ~OMRSD A3000MD.100-A (CHANNEL A – GOOD POLLING RESPONSE FROM ACTIVE RTS)	
116-037	KCDH		TCMS(DMON) 'D_M3_EXT_BUS_RT_STATUS' VERIFY: 1. DIU-EPS1 DATA FRAME TIME TAG – INCREMENTING ENG: DIU-III-A STATUS/DISCRETE INPUT DATA FRAME TIME TAG PUI: JMDC03FC0011W 2. JCP-A FRAME COUNT – INCREMENTING ENG: FRAME COUNTER PUI: JSDC00SWZ999U	

RELEASED - Printed documents may be obsolete; validate prior to use.

SECTION IV - OPERATION INSTRUCTIONS

SEQ/STEP	CMD	RESP	DESCRIPTION	VERIF.
116-038	KCDH	MS1	PCS JPM:CDH:CB-EXT-1:BUS STATUS 1. RECORD BUS ERROR COUNTER: _____ PUI: LADP01MDAWBUU 2. VERIFY BUS ERROR COUNTER NOT INCREMENTING 3. RECORD CHANNEL SWITCH COUNTER: _____ PUI: LADP01MDAWA6U 4. VERIFY CHANNEL SWITCH COUNTER HAS NOT INCREMENTED. ~OMRSD A3000MD.100-A (CHANNEL A – BUS SWITCHOVER OCCURRED WITHOUT BUS DROPOUTS) **NOTE** IF THE CBM CPA IS NO LONGER REQUIRED FOR MEIT3 PERFORM THE FOLLOWING THREE STEPS. OTHERWISE, TAKE A ‘NOT PERFORMED’.	
116-039	KCDH	MS1	PCS JPM:JEM S&M:PREP FOR MATE ‘JEM ZENITH CBM PREP FOR MATE’ 1. CMD: DEACTIVATE (CPA1) PUI: LAMC96IM0262K EXECUTE GMT _____:_____:_____ (HR:MIN:SEC) 2. VERIFY: MODE – INACTIVE ENG: CBM MODE PUI: LADP01MDD4TTJ 3. VERIFY: MASTER - NONE	
116-040	KCDH	MS1	PCS JPM:CDH:CB-EXT-1:RT STATUS ‘CB-EXT-1 RT STATUS’ VERIFY: RT STATUS I/O FOR RT 15 JEM ZENITH CBM(PRI)– INH PUI: LADP01MDAVXBJ	

RELEASED - Printed documents may be obsolete; validate prior to use.

SECTION IV - OPERATION INSTRUCTIONS

SEQ/STEP	CMD	RESP	DESCRIPTION	VERIF.
116-041	KCDH	MS1	PCS JPM:JEM S&M:PDB A2 'PDB A2 RPC DETAILS' 1. CMD: RPC4 JPM/JLP CBM CNTLR – OPEN ENG: JPM_EPS_PDB_A2_RPC04 PUI: JSPX96IM0469K EXECUTE GMT _____:_____:_____ (HR:MIN:SEC) 2. VERIFY: RPC4 POSN - OP ENG: PDB_A2 RPC4 POWER STATUS PUI: JSDC00FCP20FJ	NOT PERFORMED:_____ (PREVIOUS 3 STEPS)
116-042	KCDH	MS1	PCS JPM:CDH:CB-EXT-1:RT STATUS 'CB-EXT-1 RT STATUS' 1. CMD: RT STATUS I/O FOR RT 18 DIU-EPS1 - INHIBIT PUI: LADD96IM1019K EXECUTE GMT _____:_____:_____ (HR:MIN:SEC) 2. VERIFY: RT 18 JEM DIU-EPS1 RT STATUS I/O – INH PUI: LADP01MDAVX2J	

RELEASED - Printed documents may be obsolete; validate prior to use.

SECTION IV - OPERATION INSTRUCTIONS

SEQ/STEP	CMD	RESP	DESCRIPTION	VERIF.
116-043	KCDH	MS1	PCS JPM:CDH:CB-EXT-1:BUS STATUS 'CB-EXT-1 BUS STATUS' 1. CMD: AUTO CHANNEL SWITCH STATUS - ENABLE PUI: LADD96IM0586K EXECUTE GMT _____:_____:_____ (HR:MIN:SEC) 2. VERIFY: AUTO CHANNEL SWITCH STATUS – ENA PUI: LADP01MDAWABJ	
116-044	TIE PTC 052	PTC DKQM	CDH BUS REDUNDANCY, CB-EXT-1 COMPLETE. GMT _____:_____:_____ (DAY:HR:MIN)	

NV:_____

RELEASED - Printed documents may be obsolete; validate prior to use.

SECTION IV - OPERATION INSTRUCTIONS

SEQ/STEP	CMD	RESP	DESCRIPTION	VERIF.
117-000			**JEM A STRING DEACTIVATION (JCP-A PRIMARY)**	
117-001	PTC	DKQM	RECORD THE FOLLOWING INFORMATION: GMT _____:_____:_____ (DAY:HR:MIN)	
				NV:_____
			NOTE PERFORM THE FOLLOWING STEP IF A USOS PCS IS CONNECTED AND ACTIVE IN THE JEM MODULE.	
117-002	PTC	KCDH DKQM	PERFORM FLIGHT PCS DEACTIVATION PER R2009 SEQUENCE 09. REPORT COMPLETE. START GMT _____:_____:_____ (DAY:HR:MIN COMPLETE GMT _____:_____:_____ (DAY:HR:MIN)	
				NV:_____
			SHUTDOWN A STRING SYSTEM EQUIPMENT **POWER OFF JPM CABIN PRESSURE SENSORS A1, A2**	
117-003	KECL	MS1	PCS JPM:EPS:PIB A1 PIB A1 SWITCH DETAILS '15V/0.05A' 1. CMD: SWITCH 8 (JPM CABIN PRESS SNSR A1) - OPEN OPS: JPM_EPS_PIB_A1_15V_SW08_(JPM_CABIN_PRESS_SNSR_A1)_OP PUI: JSPX96IM0646K GMT _____:_____:_____ (HR:MIN:SEC) 2. VERIFY: SWITCH 8 POSN (JPM CABIN PRESS SNSR A1) – OP ENG: PIB_A1 15V SW8 POWER STATUS PUI: JSDC00FCPC1VJ	

RELEASED - Printed documents may be obsolete; validate prior to use.

SECTION IV - OPERATION INSTRUCTIONS

SEQ/STEP	CMD	RESP	DESCRIPTION	VERIF.
117-004	KECL	MS1	PCS JPM:EPS:PIB A1 PIB A1 SWITCH DETAILS '15V/0.05A' 1. CMD: SWITCH 1 (JPM CABIN PRESS SNSR A2) - OPEN OPS: JPM_EPS_PIB_A1_15V_SW01_(JPM_CABIN_PRESS_SNSR_A2)_OP PUI: JSPX96IM0645K GMT _____:_____:_____ (HR:MIN:SEC) 2. VERIFY: SWITCH 1 (JPM CABIN PRESS SNSR A2) POSN – OP ENG: PIB_A1 15V SW1 POWER STATUS PUI: JSDC00FCPC1OJ **POWER OFF JPM IMV SUPPLY FAN** **INHIBIT FDIR JEM IMV-A ROTATION**	
117-005	KECL	SSFE	CES MATE LOAD AND RUN MATE SCRIPT MEIT3_MATE_CMDS INDEX: 0X0068 OPS: JPM_CDH_ACTIVE_JCP_EVENT_DET_INH_TMPLT PUI: JSDD96IM0228K PARAMETER: 454 (JEM IMV SUPPLY FAN ROTATIONAL RATE OUT OF LIMIT) GMT _____:_____:_____ (HR:MIN:SEC)	
117-006	KECL		TCMS:A-STRING VERIFY: IMV SUPPLY FAN (STBD FWD) ROTATIONAL RATE OUT OF LIMIT EVENT FLAG – INHIBIT ENG: EVENT INHIBIT FLAG(JEM IMV SUPPLY FAN ROTATIONAL RATE OUT OF LIMIT) PUI: JSDC00SWZ38AJ	

RELEASED - Printed documents may be obsolete; validate prior to use.

SECTION IV - OPERATION INSTRUCTIONS

SEQ/STEP	CMD	RESP	DESCRIPTION	VERIF.
117-007	KECL	TLM	PCS	
	TLM	MJ1	JPM:ECLSS:IMV STBD FWD FAN JPM IMV FANS 'IMV STBD FWD FAN' 1. CMD: OFF OPS: JPM_ECL_IMV_STBD_FWD_FAN_A_STOP PUI: JSET96IM0005K GMT _____:_____:_____ (HR:MIN:SEC) (RECORD IN APPENDIX G) 2. VERIFY/RECORD: SPEED _____ RPM (–6580 +/- 340 RPM) ENG: JEM_IMV_SUPPLY_FAN REV PUI: JSDC00FCE120R	
117-008	KECL	MS1	PCS JPM:ECLSS:IMV STBD FWD FAN:PDB EPS1 RPC DETAILS PDB EPS1 RPC DETAILS 'RPC 04' 1. CMD: RPC 4 (JPM IMV STBD FWD FAN A) - OPEN OPS: JPM_EPS_PDB_A_EPS1_RPC04_(JPM_IMV_STBD_FWD_FAN_A)_OP PUI: JSPX96IM0538K GMT _____:_____:_____ (HR:MIN:SEC) 2. VERIFY: RPC 4 (JPM IMV STBD FWD FAN A) POSN – OP ENG: PDB_EPS1 RPC4 POWER STATUS PUI: JSDC00FCP70FJ	

RELEASED - Printed documents may be obsolete; validate prior to use.

SECTION IV - OPERATION INSTRUCTIONS

SEQ/STEP	CMD	RESP	DESCRIPTION	VERIF.
			CLOSE IMV SUPPLY VALVE	
117-009	KECL	MS1	PCS JPM:ECLSS:IMV STBD FWD VLV:PIB A1 SWITCH DETAILS PIB A1 SWITCH DETAILS '120V/0.5A' 1. CMD: SWITCH 8 (JPM IMV STBD FWD VLV A) - CLOSE OPS: JPM_EPS_PIB_A1_120V_L_SW08_(JPMIMVSTBDFWDV LVA)_CL PUI: JSPX96IM0640K GMT _____:_____:_____ (HR:MIN:SEC) 2. VERIFY: SWITCH 8 POSN (JPM IMV STBD FWD VLV A) – CL ENG: PIB_A1 120V_L SW8 POWER STATUS PUI: JSDC00FCPC27J	

RELEASED - Printed documents may be obsolete; validate prior to use.

SECTION IV - OPERATION INSTRUCTIONS

SEQ/STEP	CMD	RESP	DESCRIPTION	VERIF.
117-010	KECL	MS1	PCS JPM:ECLSS:IMV STBD FWD_VLV JPM IMV VALVES 'IMV STBD FWD VALVE' 1. CMD: POSITION - CLOSED OPS: JPM_ECL_IMV_STBD_FWD_VLV_A_POSN_CL PUI: JSET96IM0006K GMT _____:_____:_____ (HR:MIN:SEC) 2. CMD: VALVE ENABLE - ENABLE OPS: JPM_ECL_IMV_STBD_FWD_VLV_A_ENA PUI: JSET96IM0009K GMT _____:_____:_____ (HR:MIN:SEC) **NOTE** VALVE TRANSITION MAY TAKE APPROXIMATELY 35 SECONDS. VERIFY: 3. VALVE POSITION (STACK) – CLOSE ENG: JEM_IMV_SUPPLY_VALVE STACK POSN PUI: JSDC00SWE341J 4. SWITCH 8 POS – OP ENG: PIB_A1 120V_L SW8 POWER STATUS PUI: JSDC00FCPC27J	
117-011	KTCS	MS1	PCS JPM:EPS:PIB A1 PIB A1 SWITCH DETAILS '120V/0.5A' CMD: SWITCH 13 (LTL BYP LINE FCV A) - CLOSE OPS: JPM_EPS_PIB_A1_120V_L_SW13_(LTLFWDBYPLINEFCVA) _CL PUI: JSTE96IM0124K GMT _____:_____:_____ (HR:MIN:SEC)	

RELEASED - Printed documents may be obsolete; validate prior to use.

SECTION IV - OPERATION INSTRUCTIONS

SEQ/STEP	CMD	RESP	DESCRIPTION	VERIF.
117-012	KTCS	MS1	PCS JPM:TCS:JPM ATCS LTL JPM ATCS LTL 'BYPASS FCV A' 1. VERIFY: PIB A1 120V L SW13 POSN - CL PUI: JSDC00FCPC2CJ 2. ENTER VALVE POSN - 97 3. CMD: VALVE POSN - SET PUI: JSTE96IM0277K 4. VERIFY: PIB A1 120V L SW13 POSN - OP PUI: JSDC00FCPC2CJ **CLOSE CHX_A FMV**	
117-013	KTCS	SSFE	CES MATE LOAD AND RUN MATE SCRIPT MEIT3_MATE_CMDS INDEX: 0X00B0 CMD: PIB A1 SWITCH 10 - CL OPS: JPM_EPS_PIB_A1_120V_L_SW10_(LTL_THCACHXFCVA)_CL PUI: JSTE96IM0121K GMT _____:_____:_____ (HR:MIN:SEC)	
117-014	KTCS	MS1	PCS JPM:TCS:JPM ATCS LTL:PIB A1 PIB A1 SWITCH DETAILS '120V/0.5A' VERIFY: SWITCH 10 POSN - CL ENG: PIB_A1_120V_L_SW10_POWER_STATUS PUI: JSDC00FCPC29J	

RELEASED - Printed documents may be obsolete; validate prior to use.

SECTION IV - OPERATION INSTRUCTIONS

SEQ/STEP	CMD	RESP	DESCRIPTION	VERIF.
117-015	KTCS	MS1	PCS JPM:TCS:JPM ATCS LTL JPM ATCS LTL 'THC A CHX FCV' 1. CMD: CHX FMV POSITION - -7 DEG OPS: JPM_ATCS_LTL_THC_A_CHX_FCV_A_POSN_SET_TMPL T PARAMETER: -7 PUI: JSTE96IM0276K GMT _____:_____:_____ (HR:MIN:SEC) 2. VERIFY: SWITCH 10 POSN - OP ENG: PIB_A1_120V_L_SW10_POWER_STATUS PUI: JSDC00FCPC29J **POWER OFF THC-A** **NOTE** THC-A HEALTH STATUS SUMMARY STACK MAY INDICATE "ERROR" AND THC-A PARTICLE FILTER STATUS STACK AND THC-A WATER SEPARATOR STATUS STACK MAY INDICATE "ABNORMAL" WHEN THE FOLLOWING STEP IS PERFORMED.	
117-016	KECL	MS1	PCS JPM:ECLSS:THC A:THC A COMMANDS JPM THC A COMMANDS 'THC A' 1. CMD: OPS MODE - STANDBY OPS: JPM_ECL_THC_A_OPS_MODE_STANDBY PUI: JSET96IM0022K GMT _____:_____:_____ (HR:MIN:SEC) RECORD IN APPENDIX G) 2. VERIFY: OPS MODE - STANDBY ENG: THC_A RUN STATUS PUI: JSDC00FCEA0XJ 3. RECORD: FAN SPEED - _____RPM (BD) ENG: THC_A CABIN FAN SPEED CURRENT PUI: JSDC00FCEA02R	

RELEASED - Printed documents may be obsolete; validate prior to use.

SECTION IV - OPERATION INSTRUCTIONS

SEQ/STEP	CMD	RESP	DESCRIPTION	VERIF.
117-017	KECL	SSFE	CES MATE: LOAD AND RUN MATE SCRIPT MEIT3_MATE_CMDS INDEX: 0X002A CMD: DIU_A1/ THCU_A COM – STOP OPS: JPM_CDH_DIU/ORU_(RS422)_COMM_STOP_TMPLT PUI: JSDD96IM0036K PARAMETER: 6 (DIU_A1) PARAMETER: 1 (THCU_A) GMT _____:_____:_____ (HR:MIN:SEC)	
117-018	KECL	MS1	PCS JPM:ECLSS:THC A:THC A COMMANDS JPM THC A COMMANDS 'STATUS' VERIFY: DATA FRAME STAT - LAST_VALUE ENG: THC_A DF STATUS PUI: JSDC00SWEA20J	
117-019	KECL	MS1	PCS JPM:ECLSS:THC A:THC A COMMANDS:PDB TCS1 RPC DETAILS PDB TCS1 RPC DETAILS 'RPC 05' 1. CMD: RPC 5 (THCU A) - OPEN OPS: JPM_EPS_PDB_A_TCS1_RPC05_(THCU_A)_OP PUI: JSPX96IM0596K GMT _____:_____:_____ (HR:MIN:SEC) 2. VERIFY: RPC 5 POSN (THCU A) - OP ENG: PDB_TCS1 RPC5 POWER STATUS PUI: JSDC00FCP90GJ	

RELEASED - Printed documents may be obsolete; validate prior to use.

SECTION IV - OPERATION INSTRUCTIONS

SEQ/STEP	CMD	RESP	DESCRIPTION	VERIF.
117-020	KECL	MS1	PCS JPM:ECLSS:THC A:THC A COMMANDS:PDB TCS1 RPC DETAILS PDB TCS1 RPC DETAILS 'RPC 01' 1. CMD: RPC 1 (THC A FAN) - OPEN OPS: JPM_EPS_PDB_A_TCS1_RPC01_(THC_A_FAN)_OP PUI: JSPX96IM0593K GMT _____:_____:_____ (HR:MIN:SEC) 2. VERIFY: RPC 1 POSN (THC A FAN) - OP ENG: PDB_TCS1 RPC1 POWER STATUS PUI: JSDC00FCP90CJ **STOP PM CABIN_A FDS MONITOR**	
117-021	KECL	MS1	PCS JPM:ECLSS:SD A JPM CABIN SMOKE DETECTOR A 'MONITORING' 1. CMD: INHIBIT OPS: JPM_ECL_FDS_CABIN_SD_A_MONITOR_STOP PUI: JSEF96IM0025K GMT _____:_____:_____ (HR:MIN:SEC) 2. VERIFY: STATUS - INVALID ENG: PM_CABIN_SD_A MONITOR STATUS PUI: JSDC00FCE712J	

RELEASED - Printed documents may be obsolete; validate prior to use.

SECTION IV - OPERATION INSTRUCTIONS

SEQ/STEP	CMD	RESP	DESCRIPTION	VERIF.
117-022	KECL	MS1	PCS JPM:ECLSS:SD A:PIB A1 SWITCH DETAILS PIB A1 SWITCH DETAILS '120V/0.5A' 1. CMD: SWITCH 30 (JPM CABIN SD A) – OP OPS: JPM_EPS_PIB_A1_120V_L_SW30_(JPM_CABIN_SD_A)_OP PUI: JSPX96IM0649K GMT _____:_____:_____ (HR:MIN:SEC) 2. VERIFY: SWITCH 30 (JPM CABIN SD A) POSN - OP ENG: PIB_A1 120V_L SW30 POWER STATUS PUI: JSDC00FCPC2TJ **DEACTIVATE MTL DP SENSOR A & LTL DP SENSOR A**	
117-023	KTCS	MS1	PCS JPM:EPS:PIB A2 PIB A2 SWITCH DETAILS '15V/0.05A' 1. CMD: SW9 (MTL EQUIP A DP SNSR A) - OPEN ENG: JPM_EPS_PIB_A2_15V_SW09_(MTL_EQUIP_A_DP_SN SR_A)_OP PUI: JSTE96IM0174K GMT _____:_____:_____ (HR:MIN:SEC) 2. VERIFY: SW9 POSN - OP PUI: JSDC00FCPD1WJ	

RELEASED - Printed documents may be obsolete; validate prior to use.

SECTION IV - OPERATION INSTRUCTIONS

SEQ/STEP	CMD	RESP	DESCRIPTION	VERIF.
117-024	KTCS	MS1	PCS JPM:EPS:PIB A2 PIB A2 SWITCH DETAILS '15V/0.05A' 1. CMD: SW8 (LTL DP SNSR A) - OPEN ENG: JPM_EPS_PIB_A2_15V_SW08_(LTL_EQUIP_A_DP_SNSR_A)_OP PUI: JSTE96IM0173K GMT _____:_____:_____ (HR:MIN:SEC) 2. VERIFY: SW8 POSN- OP PUI: JSDC00FCPD1VJ **DEACTIVATE JEFHX FRS A**	
117-025	KTCS	MS1	PCS JPM:EPS:PIB A2 PIB A2 SWITCH DETAILS '120V/0.5A' 1. CMD: SW35 (MTL JEFHX IN FRS A) - OPEN ENG: JPM_EPS_PIB_A2_120V_L_SW35_(MTLJEFHXINFRSA)_OP PUI: JSTE96IM0187K GMT _____:_____:_____ (HR:MIN:SEC) 2. VERIFY: SW35 POSN - OP PUI: JSDC00FCPD2YJ	

RELEASED - Printed documents may be obsolete; validate prior to use.

SECTION IV - OPERATION INSTRUCTIONS

SEQ/STEP	CMD	RESP	DESCRIPTION	VERIF.
			DEACTIVATE LTL BYP FRS A	
117-026	KTCS	MS1	PCS JPM:EPS:PIB A1 PIB A1 SWITCH DETAILS '120V/0.5A' 1. CMD: SW38 (LTL BYP LINE FRS A) - OPEN ENG: JPM_EPS_PIB_A1_120V_L_SW38_(LTLFWDB YPLINEFRSA)_OP PUI: JSTE96IM0152K GMT _____:_____:_____ (HR:MIN:SEC) 2. VERIFY: SW38 POSN - OP PUI: JSDC00FCPC31J	
			DEACTIVATE LTL CHX FRS A	
117-027	KTCS	MS1	PCS JPM:EPS:PIB A1 PIB A1 SWITCH DETAILS '120V/0.5A' 1. CMD: SW39 (MTL JEFHX IN FRS A) - OPEN ENG: JPM_EPS_PIB_A1_120V_L_SW39_(LTL_THC_A_CHX_ FRS_A)_OP PUI: JSTE96IM0153K GMT _____:_____:_____ (HR:MIN:SEC) 2. VERIFY: SW39 POSN - OP PUI: JSDC00FCPC32J	

RELEASED - Printed documents may be obsolete; validate prior to use.

SECTION IV - OPERATION INSTRUCTIONS

SEQ/STEP	CMD	RESP	DESCRIPTION	VERIF.
			DEACTIVATE PIB A2	
117-028	KEPS	MS1	PCS JPM:EPS:PDB A2 'PDB A2 RPC DETAILS' 1. CMD: PDB A2 RPC3 - OPEN PUI: JSPX96IM0468K OPS: JPM_EPS_PDB_A2_RPC03_(PIB_A2)_OP GMT _____:_____:_____ (HR:MIN:SEC) 2. VERIFY: PDB_A2 RPC3 POSN - OP ENG: PDB_A2 RPC3 POWER STATUS PUI: JSDC00FCP20EJ	
			DEACTIVATE PDB A1	
117-029	KEPS	MS1	PCS: JPM:EPS:PDU A1 'PDU A1 RPC DETAILS' 1. CMD: PDU A1 RPC12 - OPEN PUI: JSPX96IM0758K OPS: JPM_EPS_PDU_A1_RPC12_(PDB_A1)_OP EXECUTE GMT _____:_____:_____ (HR:MIN:SEC) 2. VERIFY: PDU A1 RPC12 POSN - OP ENG: SYS_PDU_A RPC12 POWER STATUS PUI: JSDC00FCPH0RJ	

RELEASED - Printed documents may be obsolete; validate prior to use.

SECTION IV - OPERATION INSTRUCTIONS

SEQ/STEP	CMD	RESP	DESCRIPTION	VERIF.
			DEACTIVATE DIU_A1 VDO POWER	
117-030	KCDH	MS1	PCS JEM:JEM_EPS:PDB EPS 1 'PDB EPS1 RPC DETAILS' 1. CMD: RPC 2 (DIU_A1_VD0) - OPEN OPS: JPM_EPS_PDB_A_EPS1_RPC02_(DIU_A1_VLV)_OP PUI: JSPX96IM0548K GMT _____:_____:_____ (HR:MIN:SEC) 2. VERIFY: RPC 2 POSN - OP ENG: PDB_EPS1_RPC2_POWER STATUS PUI: JSDC00FCP70DJ	
			DEACTIVATE DIU-A3	
117-031	KCDH	SSFE	CES MATE LOAD AND RUN MATE SCRIPT MEIT3_MATE_CMDS INDEX: 0X011A CMD: JPM_EPS_PDB_A2_RPC05_(DIU_A3_VLV)_OP_(OVRD) PUI: JSPC96IM0000K EXECUTE GMT _____:_____:_____ (HR:MIN:SEC)	
117-032	KCDH		TCMS JPM:DIU A3 'DIU RPC 5' VERIFY: RPC 5 VDO – OP ENG: PDB_A2 RPC5 POWER STATUS PUI: JSDC00FCP20GJ	

RELEASED - Printed documents may be obsolete; validate prior to use.

SECTION IV - OPERATION INSTRUCTIONS

SEQ/STEP	CMD	RESP	DESCRIPTION	VERIF.
117-033	KCDH	MS1	PCS JEM:JEM_EPS:PDB A2 'PDB A2 RPC DETAILS' 1. CMD: RPC 7 (DIU_A3_CNTL) – OPEN OPS: PDB_A2_RPC7_OP_(DIU_A3_CNTL) PUI: JSPX96IM0472K GMT _____:_____:_____ (HR:MIN:SEC) 2. VERIFY: RPC 7 POSN – 0FF ENG: PDB_A2 RPC7 POWER STATUS PUI: JSDC00FCP20IJ **DEACTIVATE DIU-A2**	
117-034	KCDH	MS1	PCS JEM:JEM_EPS:PDB A2 'PDB A2 RPC DETAILS' 1. CMD: RPC 2 (DIU_A2 VDO) – OPEN OPS: PDB_A2_RPC2_OP_(DIU_A2_VLV) PUI: JSPX96IM0467K GMT _____:_____:_____ (HR:MIN:SEC) 2. VERIFY: RPC 2 POSN – OP ENG: PDB_A2 RPC2 POWER STATUS - OFF PUI: JSDC00FCP20DJ	
117-035	KCDH	MS1	PCS JEM:JEM_EPS:PDB A2 'PDB A2 RPC DETAILS' 1. CMD: RPC 6 (DIU_A2_CNTL)_ - OPEN OPS : PWR_ PDB_A2_RPC6_OP_(DIU_A2_CNTL) PUI: JSPX96IM0471K GMT _____:_____:_____ (HR:MIN:SEC) 2. VERIFY: RPC 6 POSN - OPEN ENG: PDB_A2 RPC6 POWER STATUS PUI: JSDC00FCP20HJ	

RELEASED - Printed documents may be obsolete; validate prior to use.

SECTION IV - OPERATION INSTRUCTIONS

SEQ/STEP	CMD	RESP	DESCRIPTION	VERIF.
			DEACTIVATE PDB A2	
117-036	KEPS	MS1	PCS JPM:EPS:PDU A1 'PDU A1 RPC DETAILS' 1. CMD: PDU A1 RPC11 - OPEN PUI: JSPX96IM0757K OPS: JPM_EPS_PDU_A1_RPC11_(PDB_A2)_0P EXECUTE GMT _____:_____:_____ (HR:MIN:SEC) 2. VERIFY: PDU A1 RPC11 POSN - OP ENG: SYS_PDU_A RPC11 POWER STATUS PUI: JSDC00FCPH0QJ	
			ENABLE COMM BETWEEN C&C MDM AND DIU EPS1	
117-037	KCDH	MS1	PCS TASK:JPM CONTINGENCY CH A INITIAL ACTIVATION PAGE 'DIU EPS 1' 1. CMD: 18 DIU EPS 1 RT I/0 – ENABLE OPS: PRIM_CCS_ENA_RT_TMPLT PUI: LADD96IM1018K GMT _____:_____:_____ (HR:MIN:SEC) 2. VERIFY: DIU_EPS1 RT I/0 ENA OPS: PRIM_CCS_CB_EXT_1_RT_ENA_JEM_DIU_1_RT_18 PUI:LADP01MDAVX2J	

RELEASED - Printed documents may be obsolete; validate prior to use.

SECTION IV - OPERATION INSTRUCTIONS

SEQ/STEP	CMD	RESP	DESCRIPTION	VERIF.
			ENABLE BUS FDIR FOR DIU EPS1	
117-038	KCDH	MS1	PCS JPM:JEM_CDH:CB EXT 1:RT STATUS 'CB EXT 1 RT STATUS' 1. CMD: 18 JEM DIU EPS 1 RT FDIR – ENABLE FDIR OPS: PRIM_CCS_ENA_RT_FDIR_TMPLT PUI: LADD96IM0769K GMT _____:_____:_____ (HR:MIN:SEC) 2. VERIFY: 18 JEM DIU EPS 1 RT FDIR STATUS - ENA PUI:LADP01MDAVX6J	
			ENABLE COMMAND BETWEEN C&C MDM AND DIU_EPS 1	
117-039	KCDH	SSFE	CES MATE LOAD AND RUN MATE SCRIPT MEIT3_MATE_CMDS INDEX: 0X0008 CMD: JPM_CDH_DIU_A4_CMD_RCV_FROM_C&C_MDM_INH_OVRD PUI: JSDD96IM0004K GMT _____:_____:_____ (HR:MIN:SEC)	

RELEASED - Printed documents may be obsolete; validate prior to use.

SECTION IV - OPERATION INSTRUCTIONS

SEQ/STEP	CMD	RESP	DESCRIPTION	VERIF.
117-040	KCDH		TCMS (DMON) VERIFY: EPS_RACK1_DIU MDM COMMAND INHIBIT FLAG [ACT]- ENA ENG: EPS_RACK1_DIU MDM COMMAND INHIBIT FLAG [ACT] PUI: JSDC00FCA11QJ **INHIBIT BUS FDIR FOR JCP A**	
117-041	KCDH	MS1	PCS TASK:JPM CONTINGENCY CH A INITIAL ACTIVATION PAGE 'JCP A' 1. CMD: RT FDIR – INHIBIT OPS: PRIM_CCS_ENA_RT_FDIR_TMPLT PUI: LADD96IM0769K GMT _____:_____:_____ (HR:MIN:SEC) 2. VERIFY: RT FDIR- INH ENG: PRIM_CCS_CB_EXT_1_FDIR_INH_JEM_JCP_RT_19 PUI: LADP01MDAVWXJ	

RELEASED - Printed documents may be obsolete; validate prior to use.

SECTION IV - OPERATION INSTRUCTIONS

SEQ/STEP	CMD	RESP	DESCRIPTION	VERIF.
			SHUTDOWN JCP-A	
117-042	KCDH	SSFE	CES MATE LOAD AND RUN MATE SCRIPT MEIT3_MATE_CMDS INDEX: 0X006B CMD: SHUTDOWN JCP A PUI: JSDD96IM0264K GMT _____:_____:_____ (HR:MIN:SEC) **NOTE** WAIT APPROXIMATELY 2 MINUTES BEFORE PERFORMING THE VERIFICATION.	
117-043	KCDH	MS1	PCS TASK:JPM CONTINGENCY CH A INITIAL ACTIVATION PAGE ‘JCP A’ VERIFY: FRAME COUNTER – NOT INCREMENTING ENG: FRAME COUNTER PUI: JSDC00SWZ999U **NOTE** WAIT APPROXIMATELY 1 MINUTE BEFORE PERFORMING THE VERIFICATION.	
117-044	KCDH	MS1	PCS TASK:JPM CONTINGENCY CH A INITIAL ACTIVATION PAGE ‘JCP A’ VERIFY: JCP_A FAULT SIGNAL[ACT] – NORMAL. ENG: JCP_A FAULT SIGNAL [ACT] PUI: JMDC03FCZA03J	

RELEASED - Printed documents may be obsolete; validate prior to use.

SECTION IV - OPERATION INSTRUCTIONS

SEQ/STEP	CMD	RESP	DESCRIPTION	VERIF.
			INHIBIT I/O BETWEEN JCP AND C&C MDM	
117-045	KCDH	MS1	PCS TASK:JPM CONTINGENCY CH A INITIAL ACTIVATION PAGE 'JCP A' 1. CMD: 19 JCP A RT I/O - INHIBIT OPS :PRIM_CCS_INH_RT_TMPLT PUI: LADD96IM1019K GMT _____:_____:_____ (HR:MIN:SEC) 2. VERIFY 19 JCP A RT I/O - INH ENG: PRIM_CCS_CB_EXT_1_RT_ENA_JCP_1_RT_19 PUI: LADP01MDAVWTJ	
			DEACTIVATE JCP A	
117-046	KCDH	SSFE	CES MATE LOAD AND RUN MATE SCRIPT MEIT3_MATE_ACT_CMDS INDEX: 0X0013 CMD: JPM_EPS_PDB_A_DMS1_RPC01_(JCP_A_MPC/BIC)_OP_(ACT) PUI: LADD96IM1088K EXECUTE GMT _____:_____:_____ (HR:MIN:SEC)	
117-047	KCDH		TCMS (DMON) VERIFY: RPC POSN 1 JCP (MPC/BIC) - OP ENG: PDB_DMS1 RPC1 POWER STATUS [ACT] PUI: JMDC03FCP50CJ	
117-048	KCDH	SSFE	CES MATE LOAD AND RUN MATE SCRIPT MEIT3_MATE_ACT_CMDS INDEX: 0X0014 CMD: JPM_EPS_PDB_A_DMS1_RPC07_(JCP_A_EDSU)_OP_(ACT) PUI: LADD96IM1089K EXECUTE GMT _____:_____:_____ (HR:MIN:SEC)	

RELEASED - Printed documents may be obsolete; validate prior to use.

SECTION IV - OPERATION INSTRUCTIONS

SEQ/STEP	CMD	RESP	DESCRIPTION	VERIF.
117-049	KCDH		TCMS (DMON) VERIF Y: RPC 7 POSN JCP A (EDSU) - OP ENG: PDB_DMS1 RPC7 POWER STATUS [ACT] PUI: JMDC03FCP50IJ **DEACTIVATE PDB DMS1**	
117-050	KEPS	SSFE	CES MATE LOAD AND RUN MATE SCRIPT MEIT3_MATE_ACT_CMDS INDEX: 0X0007 CMD: JPM_CDH_DIU_A4/PDB_A_DMS1_(RS422_CH1)_COMM_ST OP_(ACT) PUI: LADD96IM1071K GMT _____:_____:_____ (HR:MIN:SEC)	
117-051	KEPS		TCMS PRE-JCP:SLB1_A ‘JPM EPS SYS LOC BUS 1:AV STR A’ VERIF Y: PDB DMS1 DF TIME TAG – “NOT INCREMENTING” ENG: PDB_TCS1 DATA FRAME TIME TAG PUI: JMDC03FC0051W	

RELEASED - Printed documents may be obsolete; validate prior to use.

SECTION IV - OPERATION INSTRUCTIONS

SEQ/STEP	CMD	RESP	DESCRIPTION	VERIF.
117-052	KEPS	SSFE	CES MATE LOAD AND RUN MATE SCRIPT MEIT3_MATE_ACT_CMDS INDEX: 0X0026 CMD: PDU_A1_RPC10_OP_(PDB_DMS1)_ACT PUI: LAPX96IM0372K GMT _____:_____:_____ (HR:MIN:SEC)	
117-053	KEPS		TCMS (DMON) PDU:JEM EPS PDU A1 VERIFY: PDU A1 RPC10 POSN - OP ENG: SYS_PDU_A RPC10 POWER STATUS [ACT] PUI: JMDC03FCPH0PJ	
			NOTE PERFORM THE FOLLOWING 2 STEP IF AN SLT IS ACTIVE IN THE MODULE.	
117-054	PTC	KCDH DKQM	PERFORM SLT DEACTIVATION PER R2009 SEQUENCE 06. REPORT COMPLETE. START GMT _____:_____:_____ (DAY:HR:MIN COMPLETE GMT _____:_____:_____ (DAY:HR:MIN)	NV:_____
117-055	PTC	KEPS DKQM	PERFORM JEM UOP PANEL DEACTIVATION PER R2009 SEQUENCE 04 FOR UOP-A3- FD6. OPTION C REPORT COMPLETE. START GMT _____:_____:_____ (DAY:HR:MIN COMPLETE GMT _____:_____:_____ (DAY:HR:MIN)	NV:_____

RELEASED - Printed documents may be obsolete; validate prior to use.

SECTION IV - OPERATION INSTRUCTIONS

SEQ/STEP	CMD	RESP	DESCRIPTION	VERIF.
			STOP TEMP CONTROL AND DEACTIVATE TCV	
117-056	KTCS	MS1	PCS TASK: JPM CONTINGENCY CHANNEL A INITIAL ACTIVATION:LTL ACTIVATION 'JPM LTL ACTIVATION' 'MTL TEMP' 1. CMD TCA L MTL TEMP CNTL – STOP OPS: JPM_ATCS_TCA_L_MTL_TWMV_A_TEMP_CNTL_STOP_(ACT) PUI: LATX96IM0119K GMT _____:_____:_____ (HR:MIN:SEC) 2. VERIFY: CNTL STAT – STOPPED ENG: TCA_L MTL TEMP CNTRL EXECUTING STATUS [ACT] PUI: JMDC03FCTA0JJ	
117-057	KTCS	SSFE	CES MATE LOAD AND RUN MATE SCRIPT MEIT3_MATE_ACT_CMDS INDEX: 0X0037 CMD TCA L MTL TCV A - IFHX OPS: JPM_ATCS_TCA_L_MTL_TWMV_A_POSN_SEL_IF_HX_(ACT) PUI: LATX96IM0163K GMT _____:_____:_____ (HR:MIN:SEC)	
117-058	KTCS		TCMS VERIFY TCA_L MTL TEMP CNTRL VALVE POSTN [ACT]–IF_HX PUI: JMDC03FCT500J	

RELEASED - Printed documents may be obsolete; validate prior to use.

SECTION IV - OPERATION INSTRUCTIONS

SEQ/STEP	CMD	RESP	DESCRIPTION	VERIF.
117-059	KTCS	MS1	PCS TASK: JPM CONTINGENCY CHANNEL A INITIAL ACTIVATION:LTL ACTIVATION ‘JPM LTL ACTIVATION’ ‘MTL TCV A’ 1. CMD: PIB A1 120V L SW6 POSN – OPEN OPS: JPM_EPS_PIB_A1_120V_L_SW06_(TCA_L_MTL_TWMV_A)_OP_(ACT) PUI: LAPX96IM0319K GMT _____:_____:_____ (HR:MIN:SEC) 2. VERIFY PIB A1 120V L SW6 POSN – OP ENG: PIB_A1 120V_L SW6 POWER STATUS [ACT] PUI: JMDC03FCPC25J	

RELEASED - Printed documents may be obsolete; validate prior to use.

SECTION IV - OPERATION INSTRUCTIONS

SEQ/STEP	CMD	RESP	DESCRIPTION	VERIF.

CAUTION

ACCUMULATOR INLET SOV MUST BE DEACTIVATED WITHIN 5 MINUTES AFTER LTL PUMP DEACTIVATION. THE FOLLOWING 4 STEPS ARE TIME CRITICAL AND MUST BE PERFORMED AS QUICKLY AS POSSIBLE TO PREVENT HARDWARE DAMAGE.

CAUTION

TAC MUST BE DEACTIVATED WITHIN 10 MINUTES AFTER THE LTL PUMP DEACTIVATION. THE FOLLOWING 7 STEPS ARE TIME CRITICAL AND MUST BE PERFORMED AS QUICKLY AS POSSIBLE TO PREVENT HARDWARE DAMAGE.

NOTE

DUE TO THE TIME CONSTRAINT IN THE FOLLOWING STEPS A SECOND PCS WILL BE SHADOWING THE DISPLAY NAVIGATION FOR A SECONDARY COMMAND AND TELEMETRY SOURCE.

NOTE

ALL PERSONNEL BE FAMILIAR WITH THE FOLLOWING STEPS, NOTES AND CAUTIONS IN THE TIME CRITICAL WINDOW. BE AWARE OF THE NESTED TIME CRITICAL CAUTIONS AND TIME CONSTRAINTS.

RELEASED - Printed documents may be obsolete; validate prior to use.

SECTION IV - OPERATION INSTRUCTIONS

SEQ/STEP	CMD	RESP	DESCRIPTION	VERIF.
117-060	KTCS	MS1	PCS TASK:JPM CONTINGENCY CHANNEL A INITIAL ACTIVATION:LTL ACTIVATION 'JPM LTL ACTIVATION' 'TCA L PUMP' 1. CMD OPERATION - STOP OPS: JPM_ATCS_TCA_L_PUMP_A_STOP_(ACT) PUI: LATX96IM0117K GMT _____:_____:_____ (HR:MIN:SEC) VERIFY: 2. OPERATION - STOPPED ENG: TCA_L LTL EXECUTING STATUS [ACT] PUI: JMDC03FCTA0IJ 3. VERIFY SPEED – 0 +/- 329 RPM ENG: JPM_ATCS_TCA_L_PUMP_A_SPD_(ACT) PUI: JMDC03FCTA1WR	

RELEASED - Printed documents may be obsolete; validate prior to use.

SECTION IV - OPERATION INSTRUCTIONS

SEQ/STEP	CMD	RESP	DESCRIPTION	VERIF.
			STOP TCA L PRESS CONTROL AND CLOSE ACCUM INLET SOV	
117-061	KTCS	SSFE	CES MATE LOAD AND RUN MATE SCRIPT EIT3_MATE_ACT_CMDS INDEX: 0X0034 CMD: STOP_TCA_L_PRESS CNTRL OPS: JPM_ATCS_TCA_L_PUMP_A_IN_PRESS_CNTL_STOP_(ACT) PUI: LATX96IM0128K GMT _____:_____:_____ (HR:MIN:SEC)	
117-062	KTCS		TCMS VERIFY: TCA_L_LTL PRES CNTRL EXECUTING STAT [ACT] – STOP PUI: JMDC03FCTA0MJ	
117-063	KTCS	MS1	PCS TASK: JPM CONTINGENCY CHANNEL A INITIAL ACTIVATION:LTL ACTIVATION 'JPM LTL ACTIVATION' 'TCA L ACCUMULATOR' 1. CMD INLET VALVE POSN – CLOSE OPS: JPM_ATCS_TCA_L_ACCUM_SOV_A_CL_(ACT) PUI: LATX96IM0121K GMT _____:_____:_____ (HR:MIN:SEC) 2. VERIFY INLET VALVE POSN – CLOSE ENG: TCA_L ACCUMULATOR INLET VALVE POSTN [ACT] PUI: JMDC03FCTA1YJ	

RELEASED - Printed documents may be obsolete; validate prior to use.

SECTION IV - OPERATION INSTRUCTIONS

SEQ/STEP	CMD	RESP	DESCRIPTION	VERIF.

117-064 KTCS MS1 PCS
JPM:TCS
'JPM ATCS LTL'

RECORD/VERIFY THE FOLLOWING POST ACTIVATION PARAMETERS:

NOMENCLATURE	ACTUAL VALUE	EXPECTED VALUE	PUI
TCA L ACCUM WATER VOLUME 1		0.66-4.7 L	JSDC00FCTA02Q
TCA L ACCUM WATER VOLUME 2		0.66-4.7 L	JSDC00FCTA03Q
TCA L ACCUM WATER PRESS 1		134.0-282.1 KPA	JSDC00FCTA00P
TCA L ACCUM WATER PRESS 2		106.9-282.1 KPA	JSDC00FCTA01P

DISABLE COMM BETWEEN DIU EPS 1 AND TCA_L

117-065 KTCS MS1 PCS
TASK: JPM CONTINGENCY CHANNEL A INITIAL ACTIVATION:LTL ACTIVATION
'JPM LTL ACTIVATION'

'TCA L TAC'

1. CMD: DIU EPS 1/TCA L TAC COMM – STOP
   OPS:
   JPM_CDH_DIU_A4/TCA_L_TAC_A_(RS422_CH6)_COMM_STOP_(ACT)
   PUI: LADD96IM1078K

   GMT _____:_____:_____ (HR:MIN:SEC)

2. VERIFY: DATA FRAME COUNTER – "NOT INCREMENTING"
   ENG: TCA_L DATA FRAME TIME TAG
   PUI: JMDC03FC0091W

RELEASED - Printed documents may be obsolete; validate prior to use.

SECTION IV - OPERATION INSTRUCTIONS

SEQ/STEP	CMD	RESP	DESCRIPTION	VERIF.

DEACTIVATE TCA L TAC

117-066 KTCS MS1 PCS
TASK: JPM CONTINGENCY CHANNEL A INITIAL ACTIVATION:LTL ACTIVATION
'JPM LTL ACTIVATION'

1. CMD PDB TCS1 RPC2(TCA L TAC) POSN – OPEN
   ENG: JPM_EPS_PDB_A_TCS1_RPC02_(TCA_L_TAC_A)_OP_(ACT)
   PUI: LADC96IM131K

   GMT _____:_____:_____ (HR:MIN:SEC)

2. VERIFY RPC 2 (TCA L TAC) POWER STATUS – OP
   ENG: PDB_TCS1 RPC2 POWER STATUS [ACT]
   PUI: JMDC03FCP90DJ

RECONFIGURE JEM ATCS TO GSE PUMP

RECONFIGURE TCS LOOP

117-067 KTCS TLM MANUALLY SET TCA_L MTL THERMAL CONTROL VALVE POSITION TO PORT B (IFHX). REPORT COMPLETE.

TAG NO.	NOMENCLATURE	POSITION
MV1152	TCA_L MTL THERMAL CONTROL VALVE	PORT B (IFHX)

117-068 KTCS TLM MANUALLY SET TCA_M MTL THERMAL CONTROL VALVE POSITION TO PORT B (IFHX). REPORT COMPLETE.

TAG NO.	NOMENCLATURE	POSITION
MV1252	TCA_M MTL THERMAL CONTROL VALVE	PORT B (IFHX)

117-069 KTCS TLM RECONFIGURE MTL COOLING GSE FROM FLIGHT PUMP MODE TO GSE PUMP MODE AS FOLLOWS:

1. DISCONNECT QD B/C COUPLING PER FIGURE 1.
2. CONNECT QD A/B COUPLING PER FIGURE 1.
3. CONNECT QD C/D COUPLING PER FIGURE 1.
4. REPORT COMPLETE.

117-070 KTCS TLM START MTL COOLANT FROM RESOURCE SUPPLY EQUIPMENT. REPORT COMPLETE.

GMT _____:_____:_____ (DAY:HR:MIN)

RELEASED - Printed documents may be obsolete; validate prior to use.

SECTION IV - OPERATION INSTRUCTIONS

SEQ/STEP	CMD	RESP	DESCRIPTION	VERIF.
			DEACTIVATE POWER TO PUMP	
117-071	KTCS	MS1	PCS TASK: JPM CONTINGENCY CHANNEL A INITIAL ACTIVATION:LTL ACTIVATION 'JPM LTL ACTIVATION' 'TCA L' 1. CMD PDB TCS 1 RPC4 (TCA L PUMP) POSN – OPEN ENG: JPM_EPS_PDB_A_TCS1_RPC04_(TCA_L_PUMP_A_INV)_OP_(ACT) PUI: LADD96IM1134K GMT _____:_____:_____ (HR:MIN:SEC) 2. VERIFY: PDB TCS 1 RPC 4 (TCA L PUMP) POSN – OP OPS: PDB_TCS1 RPC4 POWER STATUS [ACT] PUI: JMDC03FCP90FJ	

RELEASED - Printed documents may be obsolete; validate prior to use.

SECTION IV - OPERATION INSTRUCTIONS

SEQ/STEP	CMD	RESP	DESCRIPTION	VERIF.
			DEACTIVATE PDB TCS1	
117-072	KEPS	SSFE KCDH	CES MATE LOAD AND RUN MATE SCRIPT MEIT3_MATE_ACT_CMDS INDEX: 0X0008 CMD: DIU_EPS1_SIO2_A_STOP_SMPLNG_(PDB_TCS1)_ACT PUI: LADD96IM1072K GMT _____:_____:_____ (HR:MIN:SEC)	
117-073	KEPS		TCMS PRE-JCP:SLB1_A 'JPM EPS SYS LOC BUS 1:AV STR A' VERIFY: PDB TCS1 DF TIME TAG – "NOT INCREMENTING" ENG: PDB_TCS1 DATA FRAME TIME TAG PUI: JMDC03FC0051W	
117-074	KEPS	SSFE	CES MATE LOAD AND RUN MATE SCRIPT MEIT3_MATE_ACT_CMDS INDEX: 0X0027 CMD: PDU_A1_RPC6_OP_(PDB_TCS1)_ACT PUI: LAPX96IM0373K GMT _____:_____:_____ (HR:MIN:SEC)	
117-075	KEPS		TCMS (DMON) VERIFY: PDU A1 RPC6 POSN - OP ENG: SYS_PDU_A RPC6 POWER STATUS [ACT] PUI: JMDC03FCPH0LJ	

RELEASED - Printed documents may be obsolete; validate prior to use.

SECTION IV - OPERATION INSTRUCTIONS

SEQ/STEP	CMD	RESP	DESCRIPTION	VERIF.
			INHIBIT FDIR BETWEEN DIU EPS 1 AND C&C MDM	
117-076	KCDH	MS1	PCS TASK:JPM CONTINGENCY CH A INITIAL ACTIVATION PAGE 'DIU EPS 1' 1. CMD: RT FDIR – INHIBIT OPS: PRIM_CCS_INH_RT_FDIR_TMPLT PUI: LADD96IM0770K GMT _____:_____:_____ (HR:MIN:SEC) 2. VERIFY:RT FDIR STATUS - INH ENG: PRIM_CCS_CB_EXT_1_RT_FDIR_ENA_JEM_DIU_1_RT _18 PUI:LADP01MDAVX6J	
			INHIBIT RT I/0 BETWEEN DIU EPS 1 AND C&C MDM	
117-077	KCDH	MS1	PCS TASK:JPM CONTINGENCY CH A INITIAL ACTIVATION PAGE 'DIU EPS 1' 1. 18 DIU EPS RT-I/0– INHIBIT ENG: PRIM_CCS_ENA_RT_TMPLT PUI: LADD96IM1019K GMT _____:_____:_____ (HR:MIN:SEC) 2. VERIFY: DIU_EPS1 RT I/0 - INH ENG: PRIM_CCS_CB_EXT_1_RT_ENA_JEM_DIU_1_RT_18 PUI:LADP01MDAVX2J	
117-078	KEPS	SDAS	PDAS VERIFY/RECORD: JEM A STRING INPUT CURRENT _____ (</= 5 AMPS)	

RELEASED - Printed documents may be obsolete; validate prior to use.

SECTION IV - OPERATION INSTRUCTIONS

SEQ/STEP	CMD	RESP	DESCRIPTION	VERIF.
117-079	KEPS	DET1 DKQN	OPEN EPS MANUAL SWITCH FOR JEM A STRING POWER.	TNW:_____
117-080	TIE PTC 052	PTC DKQM	JEM DEACTIVATION (JCP-A PRIMARY) COMPLETE. GMT _____:_____:_____ (DAY:HR:MIN)	NV:_____

RELEASED - Printed documents may be obsolete; validate prior to use.

SECTION V - POST OPERATION INSTRUCTIONS

SEQ/STEP	CMD	RESP	DESCRIPTION	VERIF.
118-000			**POST OPERATION INSTRUCTION – PROCEDURE CLOSURE**	
118-001			CLOSE THIS PROCEDURE	
				NV:_____
				TL:_____
118-002			CM REVIEW COMPLETE	
				CM:_____

RELEASED - Printed documents may be obsolete; validate prior to use.

ILLUSTRATIONS

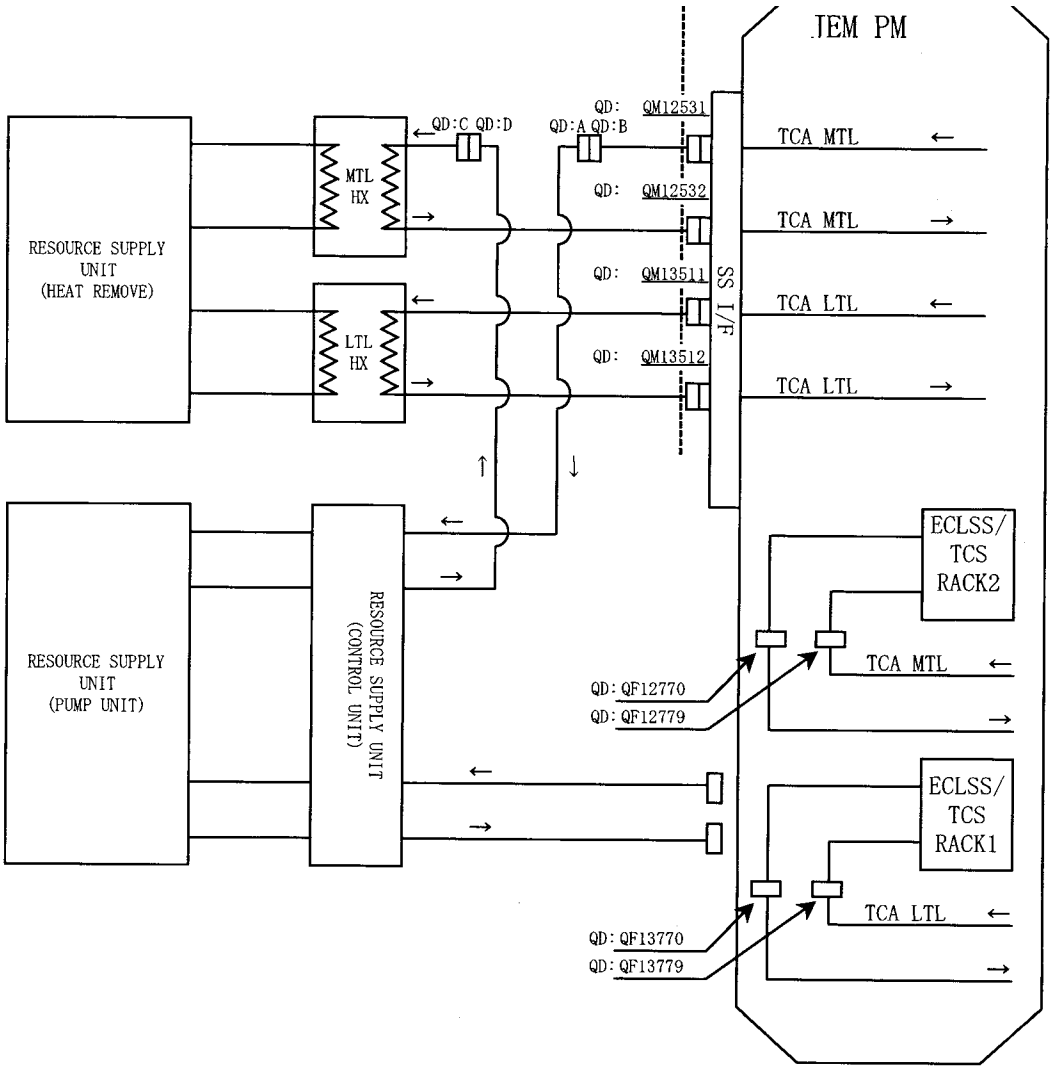

FIGURE ***

FIGURE 1 – JEM TCS GSE CONFIGURATION

RELEASED - Printed documents may be obsolete; validate prior to use.

APPENDIX QA

OPERATION INSTRUCTIONS WILL BE CALLED FOR EXECUTION VIA THE BAR CHART AGREED UPON IN THE PMR MEETINGS.

RELEASED - Printed documents may be obsolete; validate prior to use.

APPENDIX S - SAFETY DATA SHEETS

NOT APPLICABLE

RELEASED - Printed documents may be obsolete; validate prior to use.

APPENDIX Z - EMERGENCY INSTRUCTIONS

O/STEP	CMD	RESP	DESCRIPTION	VERIF.

RGENCY INSTRUCTIONS ARE LOCATED IN R0031V3

********** END-OF-OMI **********

RELEASED - Printed documents may be obsolete; validate prior to use.

RELEASED - Printed documents may be obsolete; validate prior to use.