DATE 08-11-03

OMI NO.: R2009
REV: BASIC

OPERATION & MAINTENANCE INSTRUCTION

MULTI-ELEMENT INTEGRATED TEST 3 (MEIT 3)
COMMON SUPPORT PROCEDURE

THIS DOCUMENT DOES NOT CONTAIN HAZARDOUS OPERATIONS

NATIONAL AERONAUTICS AND
SPACE ADMINISTRATION

JOHN F. KENNEDY
SPACE CENTER

RELEASED - Printed documents may be obsolete; validate prior to use.

DATE 08-11-03

OMI NO.: R2009
REV: BASIC

THE BOEING COMPANY

MULTI-ELEMENT INTEGRATED TEST 3 (MEIT 3)
COMMON SUPPORT PROCEDURE

APPROVED BY:

Eric K. Hanson G110 8/6/03
PAYLOAD TEST CONDUCTOR, BOEING

UB-C1 8/8/03
TEST DIRECTOR, NASA

Dumenia Pires 8/8/03

Wiermonie AS1 8/8/03

SK-PC 8 Aug 03
NODE 2 PROJECT OFFICE, MSFC

Gloria Vigilante UB-G6 8-7-03
TECHNICAL INTEGRATION ENGINEER, NASA

8/7/03
JEM PROJECT TEAM, NASDA

REV-CHANGE	DATE	REASON	PAGES AFFECTED
BASIC	08-11-03		ALL

THIS PROCEDURE DOES NOT CONTAIN HAZARDOUS OPERATIONS

RELEASED - Printed documents may be obsolete; validate prior to use.

OMI BACKUP SIGNATURE SHEET

OMI TITLE: **MULTI-ELEMENT INTEGRATED TEST 3 (MEIT 3) COMMON SUPPORT PROCEDURE**

SYSTEM	AGENCY CONTRACTOR /NASA	SIGNATURES CONTRACTOR	NASA
CDH	NASA	N/A	UB-G3 8/7/03
EPS	NASA	N/A	UB-G1 8-7-03
TCS	NASA	N/A	UB-G5 8/8/03
ECLSS	NASA	N/A	N/A
C&T	NASA	N/A	UB-G2 8/8/03
QUALITY	NASA	N/A	UB-F3 8/7/03
LOGISTICS	BOEING	8/7/03	N/A
OMD	BOEING	8/5/03 G122	N/A
P/L COMM	CSOC	8/8/03	N/A
MOD	NASA	N/A	
FE	BOEING	8/7/03 N110	N/A
YOPS	BOEING	G124 8/8/03	N/A
VITT	BOEING	VITT 8-7-03	N/A
TCMS O&M	BOEING	N110 8-7-03	N/A
JEM SYSTEM	NASDA	中野屋 壮吾 8-7-03	N/A
SAFETY & QUALITY	NASDA	8/7/03	N/A
PM SYSTEM	MHI	植田 豊 8/7/03	N/A
RMS SYSTEM	NTS		N/A

RELEASED - Printed documents may be obsolete; validate prior to use.

TABLE OF CONTENTS

COVER PAGE
APPROVAL PAGE
DEVIATION LOG
TABLE OF CONTENTS
OBJECTIVES/DESCRIPTION.....1

BAR CHART.....2

SECTION I - INFORMATION

1.1 REFERENCED INSTRUCTIONS 3
1.2 COMPUTER SYSTEMS 4
1.3 SPECIAL TOOLS, EQUIPMENT AND MATERIALS 7
1.4 SUPPORT REQUIREMENTS 8
1.5 PERSONNEL CERTIFICATION REQUIREMENTS 11
1.6 SAFETY REQUIREMENTS 11
1.7 SPECIAL INSTRUCTIONS 14
1.8 APPLICABLE TECHNICAL REQUIREMENTS 34

SECTION II - PRE-OPERATION SETUP INSTRUCTIONS

NOT APPLICABLE

SECTION III - OPERATION SUPPORT SETUP INSTRUCTIONS

NOT APPLICABLE

SECTION IV - OPERATION INSTRUCTIONS

01-000 **CONNECT USOS PCS LAPTOP TO JEM UTILITY OUTLET PANEL** 37
02-000 **DISCONNECT USOS PCS LAPTOP FROM JEM UTILITY OUTLET PANEL** 46
03-000 **JEM UOP PANEL ACTIVATION** 56
04-000 **JEM UOP PANEL DEACTIVATION** 65
05-000 **SLT ACTIVATION** 74
06-000 **SLT DEACTIVATION** 77
07-000 **SAVE FLIGHT PCS LOG FILES TO PCS HARD DRIVE** 79
08-000 **FLIGHT PCS ACTIVATION** 85
09-000 **FLIGHT PCS DEACTIVATION** 91
10-000 **FLIGHT PCS SCREEN CAPTURE** 94
11-000 **COPY FLIGHT PCS SAVED FILES TO FLOPPY DISK** 102
12-000 **FLIGHT MEMORY DATA DUMP FROM PRIMARY JCP** 108
13-000 **FLIGHT MEMORY DATA DUMP FROM MDP** 112
14-000 **RESERVED** 116
15-000 **JEM COMMON ACTIVATION (JCP-A PRIMARY)** 117
16-000 **JEM COMMON DEACTIVATION (JCP-A PRIMARY)** 155
17-000 **JEM COMMON ACTIVATION (JCP-B PRIMARY)** 173
18-000 **JEM COMMON DEACTIVATION (JCP-B PRIMARY)** 211
19-000 **JCP-A STANDBY ACTIVATION** 230
20-000 **JCP-A STANDBY DEACTIVATION** 235
21-000 **JCP-B STANDBY ACTIVATION** 238
22-000 **JCP-B STANDBY DEACTIVATION** 243
23-000 **JCP SWITCHOVER (JCP A ACTIVE TO JCP B ACTIVE)** 247
24-000 **JCP SWITCHOVER (JCP B ACTIVE TO JCP A ACTIVE)** 257
25-000 **C&C RECOVERY AFTER A SWITCHOVER** 268

RELEASED - Printed documents may be obsolete; validate prior to use.

26-000 **RESERVED** 272

RELEASED - Printed documents may be obsolete; validate prior to use.

27-000 **RMS CONSOLE E-STOP RECOVERY** 273
28-000 **DISABLE RMS MDP COMMUNICATION WITH C&C MDM** 276
29-000 **ENABLE RMS MDP COMMUNICATION WITH C&C MDM** 278

SECTION V - POST OPERATION INSTRUCTIONS

30-000 **POST OPERATION INSTRUCTION – PROCEDURE CLOSURE** 279

ILLUSTRATIONS.....280

APPENDIX A

PCS LOG FILE SAVE INFORMATION.....281

APPENDIX B

PCS SAVED FILE COPY TO FLOPPY INFORMATION.....282

APPENDIX C

PCS SCREEN CAPTURE INFORMATION.....283

APPENDIX D

JCP SWITCHOVER/C&C RECOVERY ORU CONFIGURATION/VERIFICATION TABLE.....284

APPENDIX QA.....285

APPENDIX S - SAFETY DATA SHEETS.....286

APPENDIX W

31-000 WATER LEAK ASSESSMENT (OUTSIDE OF NODE 2 OR JEM) 287

APPENDIX Y

32-000 **AMMONIA LEAK ASSESSMENT** 288

APPENDIX Z - EMERGENCY INSTRUCTIONS

33-000 **GENERAL EMERGENCY INSTRUCTIONS – SSPF** 289
34-000 **NODE 2 AND JEM EMERGENCY POWER DOWN (FLIGHT ELEMENTS ONLY)** 290
35-000 **NODE 2, JEM AND GSE EMERGENCY POWER DOWN (FLIGHT ELEMENT AND FOOTPRINTS)** 292
36-000 **MODULE INTERNAL WATER LEAK EMERGENCY POWER DOWN – (EVACUATION FOR NODE 2 OR JEM ONLY)** 295
37-000 **OXYGEN DEFICIENCY ALARM IN THE NODE 2 OR JEM MODULE** 298

THIS PAGE INTENTIONALLY LEFT BLANK

RELEASED - Printed documents may be obsolete; validate prior to use.

OBJECTIVES

THIS IS A MULTI-RUN OMI THAT CONTAINS FLIGHT SOFTWARE AND C&DH-RELATED SEQUENCES THAT ARE COMMON TO THE MEIT 3 TEST CONFIGURATIONS. USE OF THIS BOOK IS INTENDED TO ALLEVIATE THE PROBLEM OF MAINTAINING CURRENT VERSIONS OF THESE SEQUENCES IN MULTIPLE OMIS, AND TO HELP TO STANDARDIZE THE PERFORMANCE OF THESE ACTIVITIES.

THIS OMI WILL OPERATE AS A SUB-TASK WAD TO THE MASTER/CONTROLLING MEIT 3 TEST OMI.

DESCRIPTION

THE ACTIVITIES THAT ARE INCLUDED IN THIS WAD LISTED IN TABLE OF CONTENTS.

RELEASED - Printed documents may be obsolete; validate prior to use.

BAR CHART

NOT APPLICABLE

RELEASED - Printed documents may be obsolete; validate prior to use.

SECTION I - INFORMATION

1.1 REFERENCED INSTRUCTIONS

1.1.1 REQUIRED DOCUMENTS

NUMBER	REV	TITLE
R0031V2	BASIC	MEIT3 LOCAL TEST (BOOK 2 OF 3)
R0031V3	BASIC	MEIT3 LOCAL TEST (BOOK 3 OF 3)
R01120V1	BASIC	NODE 2 SYSTEMS PREPS AND SUPPORT SEQUENCES - SSPF
R01120V2	BASIC	NODE 2 SYSTEMS TEST - SSPF
R3008	A	DC LOAD CONFIGURATION
R2513	A	ISS/PAYLOAD POWER QUALITY SUPPORT
R2530	C	C&T LAB O&M
R2010	BASIC	EPS SUPPORT OMI
R2009	BASIC	MEIT3/JEM COMMON SUPPORT PROCEDURE
R2220	BASIC	NODE 2 OPERATIONAL READINESS TEST
EMC-3418	BASIC	EME TPS
JTP-321014	NC (BASIC)	JEM LAUNCH SITE PROCEDURE, COMMON PROCEDURE – EPS GSE
JTP-321015	NC (BASIC)	JEM LAUNCH SITE OPERATION PROCEDURE, COMMON PROCEDURE – ATCS GSE
R2005	C	FLIGHT EMULATOR ACTIVATION AND CHECKOUT
R2008	BASIC	NODE 2/MEIT 3 SE OPERATION AND TEST SITE VERIFICATION – SSPF
R3510	BASIC	TCMS DAILY OPS

1.1.2 REQUIRED DRAWINGS

NUMBER	TITLE
JCX-2003117	JEM HOOK UP CHECK SHEET FOR MEIT 3

RELEASED - Printed documents may be obsolete; validate prior to use.

1.1.3 INFORMATION DOCUMENTS

NUMBER	TITLE
SSP-50672	ISS PROGRAM SOFTWARE ICD, UNITED STATES ON-ORBIT SEGMET TO JEM Rev July 1, 2002
JTP-10041-3	COMMAND AND DATA HANDLING PROCEDURE JOINT TEST 2 APRIL 11 2002 (FLIGHT MODULE)
JCX-95163 REV C	JEM ASSEMBLY AND ACTIVATION SCENARIO
SSP-42000	USOS JEM ICD
SSP-42002	ISPR ICD

1.1.4 INFORMATION DRAWINGS

NUMBER	TITLE
82K07372	MIS
JTD-321801	MEIT3 CONFIGURATION – PM, JEM

1.2 COMPUTER SYSTEMS

1.2.1 SOFTWARE

1.2.1.1 TCMS SOFTWARE (PROGRAMS)

NUMBER	TITLE
6.0	TCMS SOFTWARE RELEASE 6.0A

APPLICATION SOFTWARE

SYSTEM	TITLE
C&DH	C&DH APPLICATION SUITE
EPS	EPS APPLICATION SUITE
C&T	C&T APPLICATION SUITE
TCS	TCS APPLICATION SUITE
ECLSS	ECLSS APPLICATION SUITE

RELEASED - Printed documents may be obsolete; validate prior to use.

1.2.1.2 MEIT FLIGHT SOFTWARE (PROGRAMS)

NOTE

THE CHART LISTING BELOW IS FOR REFERENCE ONLY, SPECIFICALLY THE RELEASE & VERSION NUMBER. ACTUAL CONFIGURATION WILL BE DOCUMENTED IN APPENDIX K.

NUMBER	TITLE
R4.5	CCS FLIGHT SOFTWARE
R2.1 V14	INTSYS FLIGHT SOFTWARE
R3 V1.0	PMCA FLIGHT SOFTWARE
R4 V32	PEP SOFTWARE
6S FINAL	PEP RECON CONFIG TABLE
3.2/P1	MSS SOFTWARE 15A
R1 V06	N2SYS1 FLIGHT SOFTWARE
R1 V08	N2SYS2 FLIGHT SOFTWARE
R4 V1.0	GNC FLIGHT SOFTWARE
REL 6 EC2	PCS SOFTWARE
V23.01	JCP FLIGHT SOFTWARE P/N 80AC70201-111
V4.01	MDP SYSTEM SOFTWARE P/N 006421002G2
V5.11	MDP APPLICATION SOFTWARE P/N 006421002G2
V5.36	MDP DATA BASE P/N 006421002G2
V1.9	PDH SOFTWARE LOAD P/N NFT0A580005G10
TBLIMAX.DAT	PDH CCT TABLE
V7.02	SLT SOFTWARE P/N 80A573001-101
V2.05	RLT APPLICATION SOFTWARE
V2.36	RLT APPLICATION DATABASE

RELEASED - Printed documents may be obsolete; validate prior to use.

1.2.1.3 MEIT SIM SOFTWARE (PROGRAMS)

NUMBER	TITLE
N/A	PASS 1000 NASDA PAYLOAD SIMULATION
V2.30	JEMRMS ARM SIMULATOR
4.5.0	CES MATE SIMULATION
SIM R4_1_0	GNC MATE SUMULATION

1.2.2 SYSTEM CONFIGURATION

1.2.2.1 TEST SITE/FLIGHT EMULATOR SYSTEM REQUIREMENTS

INITIAL HARDWARE

C&DH:
2C&C MDM FEUs
GN&C MDM FEU
PCMU MDM FEU
INT MDM FEU
MATE 01
MATE 02
MATE 03
MATE 04
CDH 01
CDH 02
CDH 03
CDH 04
SUN 01
SUN 02
SUN 03
SUN 04
DBT 01
DBT 02
PCS 5 GROUND, 2 FLIGHT

TCMS:
1. TCMS FEPS 20, 21, 80 & 81

RELEASED - Printed documents may be obsolete; validate prior to use.

SUBSEQUENT HARDWARE

1. NASDA ARM SIMULATOR

1.2.2.2 TCMS SYSTEM REQUIREMENTS

1. APPLICATION PROCESSOR
2. ARCHIVE RETRIEVAL SUBSYSTEM
3. X-TERM CONSOLES (15 EA.)
4. FRONT END PROCESSOR
5. COLOR PRINTER

1.2.3 DATA REQUIREMENTS (REAL TIME)

ARS, NASDA DPE, NASDA CLE, PDAS AND PASS 1000

1.2.4 DATA REQUIREMENTS (POST TEST)

NONE

1.3 SPECIAL TOOLS, EQUIPMENT AND MATERIALS

EQUIPMENT REQUIRED FOR THE PERFORMANCE OF THIS OMI IS RECORDED IN THE MEIT3 DELIVERABLE ITEMS SHEET (DIS). THE DIS WILL BE ATTACHED TO THIS PROCEDURE BEFORE THE START OF MEIT3.

1.3.1 BOEING-CAPPS (C&T) SUPPLIED EQUIPMENT

NOT APPLICABLE

1.3.2 BOEING-CAPPS SUPPLIED EQUIPMENT

REFERENCE OMI R0031V3 APPENDIX H, DIS FOR BOEING-CAPPS SUPPLIED EQUIPMENT

RELEASED - Printed documents may be obsolete; validate prior to use.

1.4 SUPPORT REQUIREMENTS

1.4.1 FREQUENCY UTILIZATION

FREQUENCY (MHZ)	PURPOSE AND REMARKS
N/A	

1.4.2 COMMUNICATIONS PER OR/OD

NOT APPLICABLE

1.4.2.1 VOICE

CONFIGURE PER OR/OD SAS

1. VOICE RECORDING CONTINUOUS WITH TIMING
   INDUSTRIAL AREA OIS CH. 050 THRU 059, 060, 061 MISSION AMP 15

2. LOCATIONS:

   SSPF ROOMS: 2393(CR#2), 1235(C&T), 2347(CMR),
   2387(CR#3), 2377 (CR#5-TCMS R),
   2359 (CR#8 – TCDS CR), 2398 (QMCR)

   FOOTPRINTS 5, 6

3. CHANNELIZATION

OIS_CH.	DISCIPLINE
050	NASA TEST DIRECTOR
051	PAYLOAD TEST CONDUCTOR
052	KSC INTEGRATED OPS #1
053	KSC FLUID OPS
054	KSC EPS SYSTEMS
055	KSC C&DH/FE Systems
056	KSC C&T SYSTEMS
057	KSC INTEGRATED OPS #2
058	NASDA COORDINATION
059	NASDA COORDINATION
060	MSFC COORDINATION
061	MSFC COORDINATION
062 THRU 065	SPARE
066	ALENIA COORDINATION
067 THRU 069	SPARE

1.4.2.2 WIDEBAND LANDLINES

NOT APPLICABLE

RELEASED - Printed documents may be obsolete; validate prior to use.

1.4.3 OPERATIONAL TELEVISION (OTV)

1. OTV CAMERAS TO BE RECORDED

CAMERA DESCRIPTION	CAMERA ID
CONTROL ROOM PCS 1	PCS1
CONTROL ROOM PCS 2	PCS2
CONTROL ROOM PCS 3	PCS3
CONTROL ROOM PCS 4	PCS4
NODE 2 PCS	PCS N2
JEM-PM PCS	PCS JEM
JEM-PM SLT	SLT
JEM-PM RLT	RLT
JEM RMS	RMS
FLIGHT EMULATOR RWS	FE RWS
JEM INTERNAL SURVEILLANCE	JEM INT
JEM EXTERNAL SURVEILLANCE	JEM EXT
NODE 2 INTERNAL SURVEILLANCE	N2 INT
NODE 2 EXTERNAL SURVEILLANCE	N2 EXT

2. OTV MONITORS TO BE PATCHED

MONITOR NUMBER	CAMERA NO.
TCS INTERMEDIATE BAY	TCS IB
TCS HIGH BAY	TCS HB

3. 1 X 6 SWITCHES

SWITCH NUMBER	POSITION	INPUT/CAMERA NUMBER

CONFIGURE PER OR/OD SAS

TYPE	LOCATION	NUMBER

CONFIGURE CCTV TO SSPF ROOMS 2347 (CMR), 2387(CR#3), 2393(CR#2) AND, 2398(QTMR).

RELEASED - Printed documents may be obsolete; validate prior to use.

1.4.4 COUNTDOWN DISPLAY/STATUS

DISPLAY REQUIRED	BLDG	ROOM	OPERATION TIME

1.4.5 PHOTOGRAPHIC REQUIREMENTS

SUBJECT	TYPE CAMERA	FPS	FILM LOAD	TIMING	REMARKS
IAA TEST (SEQUENCE 204)	A/R	A/R	A/R	A/R	PHOTOGRAPHER TO DETERMINE REQUIRED EQUIPMENT/SETTINGS

1.4.6 METEOROLOGICAL

1.4.6.1 FORECASTS

USA DUTY OFFICER WILL NOTIFY ON THE PAGING SYSTEM WHEN LIGHTNING IS OBSERVED WITHIN 5 MILES OF THE INDUSTRIAL AREA.

1.4.7 SUPPORT EQUIPMENT/SERVICES

N/A

1.4.11 DATA DISPOSITION

DATA DESCRIPTION	OUTPUT FORM	DISTRIBUTION	QUANTITY ORIG/CYS	RECIPIENT	RETENTION
OIS VOICE RECORDINGS	CASS TAPE	GTS-719	X	X	*
PCS RECORDINGS	VCR TAPE AND CD	BOEING E186	X	X	*
TCMS RECORDINGS	OPTICAL DISK	BOEING E182			*
PDAS	DISK	BOEING	X	X	*
HDGR	TAPE	BOEING C&T	X	X	*

X = QUANTITY AND RECIPIENT TO BE SPECIFIED IN REAL TIME, IF REQUIRED.

* = RETAIN RECORDINGS FOR 30 DAYS AFTER LAUNCH.

RELEASED - Printed documents may be obsolete; validate prior to use.

1.4.13 SECURITY AND SAFETY

FACILITY SECURITY/ACCESS CONTROL AND CLEARANCE

BARRICADES
ROPES AND STANCHIONS
GUARDS
SIGNS
SPECIAL BADGING

SAFETY - AREA SURVEILLANCE

1.4.14 ENVIRONMENTAL CONTROL

STANDARD SSPF HIGH BAY SUPPORT

1.4.18 OTHER SUPPORT

N/A

1.5 PERSONNEL CERTIFICATION REQUIREMENTS

1.5.1 SKILL CERTIFICATIONS/LICENSE REQUIREMENTS

NOT APPLICABLE

1.5.2 CONTROLLED AREA ACCESS

THE JEM-PM INTERNAL MANLOADING WILL BE CONTROLLED BY THE PTC WITH NASDA TEST CONDUCTOR CONCURRANCE

THE NODE 2 INTERNAL MANLOADING WILL BE CONTROLLED BY THE PTC

1.6 SAFETY REQUIREMENTS

1.6.1 SAFETY DOCUMENTATION

NUMBER	TITLE
KHB 1700.7	STS PAYLOAD GROUND SAFETY HANDBOOK
KHB 1710.2	KSC SAFETY PRACTICES HANDBOOK (KSC)
BP1009	BSCO EMERGENCY PREPAREDNESS PLAN
BP 3061	PAYLOAD SERVICES EMERGENCY PREPAREDNESS PLAN
SP 1.004	MISHAP REPORTING, INVESTIGATION, AND ACTION
BP1000	BOEING SAFETY AND HEALTH PLAN
KHB 1840.1	KSC INDUSTRIAL HYGIENE HANDBOOK
O&SHA-GSE-0001	OPERATIONS & SUPPORT HANDBOOK AMMONIA SAFETY PLAN

RELEASED - Printed documents may be obsolete; validate prior to use.

1.6.2 HAZARDS

LIST OF HAZARDS

480 VAC – 100 AMP, 3 PHASE POWER
208 VAC – 100 AMP, 3 PHASE POWER
28 VDC – 40 AMP POWER
120 VAC – 15 AMP, SINGLE PHASE
160 VDC – 100 AMP, TRILECTRON POWER

HEALTH HAZARDS

NOT APPLICABLE

1.6.3 SPECIFIC REQUIREMENTS

1. EMERGENCY INSTRUCTIONS ARE CONTAINED IN APPENDIX Z OF THIS OMI. ALL PERSONNEL SHALL BE FAMILIAR WITH THE INSTRUCTIONS PERTAINING TO THEIR STATIONS. ALL PERSONNEL SHALL BE FAMILIAR WITH ALL EXITS FROM AREA IN WHICH THEY ARE WORKING. REFER TO BP1009, ANNEX A FOR ADDITIONAL EMERGENCY INSTRUCTIONS.

2. SHOULD A HAZARDOUS CONDITION DEVELOP DURING TESTING, THE TEST CONDUCTOR SHALL IMMEDIATELY INITIATE PROPER RECOVERY ACTION WHICH MAY INCLUDE ABORTING THE TEST PROCEDURE. SEE APPENDIX Z.

3. THE TASKLEADER / TEST DIRECTOR WILL REVIEW THE JSC LESSONS LEARNED DATABASE WITHIN 14 WORKING DAYS PRIOR TO THIS OPERATION AND ENSURE THAT THERE ARE NO LESSONS LEARNED APPLICABLE TO THIS OPERATION OR THAT APPROPRIATE CONTROLS ARE IN PLACE.

4. MISHAP REPORTING WILL BE IN ACCORDANCE WITH SP 1.004. NOTIFY THE BOEING SAFETY OF ANY MISHAP OR CLOSE CALL AT 7-2901/7-5440.

5. ELECTRICAL CONNECTORS SHALL NOT BE CONNECTED/DISCONNECTED WHILE VOLTAGE IS APPLIED TO CONNECTORS EXCEPT AS IN ACCORDANCE WITH SPP-E03

6. WEATHER NOTIFICATION AND ASSOCIATED INSTRUCTIONS WILL BE IN ACCORDANCE WITH KHB 1710.2, CHAPTER 2.

RELEASED - Printed documents may be obsolete; validate prior to use.

1.6.3 SPECIFIC REQUIREMENTS (CONTINUED)

7. WEATHER NOTIFICATION OF SEVERE WEATHER/LIGHTNING – SSPF

PHASE 1 LIGHTNING

THIS "ADVERSE WEATHER ADVISORY" STATES LIGHTNING CONDITIONS MAY EXIST BEGINNING 30 MINUTES OR MORE FROM TIME ADVISORY IS ISSUED. PHASE 1 IS A SAFE OPERATIONS TIME FOR ALL OPERATIONS EXCEPT THOSE REQUIRING AN EXTENDED LEAD TIME TO SAFELY SECURE.

PHASE 2 LIGHTNING

THIS "FIVE MILE LIGHTNING ADVISORY" STATES LIGHTNING IS IN PROGRESS OR IS AN IMMEDIATE THREAT. SSPF OPERATIONS LISTED BELOW WILL TERMINATE WHEN THE PHASE 2 ANNOUNCEMENT IS MADE FOR THE INDUSTRIAL AREA, OR ALL AREAS OF KSC. IF LIGHTNING IS PREDICTED BY PHASE 1 BUT DOES NOT OCCUR, PHASE 2 WILL NOT BE ISSUED. THE SSPF IS A LIGHTNING PROTECTED FACILITY.

PHASE 1 IN EFFECT

BEGIN SECURING OPERATIONS ON: THE OPERATIONS LISTED IN PHASE 2 BELOW THAT REQUIRE AN EXTENDED LEAD TIME IN ORDER TO SAFELY SECURE AS DETERMINED BY THE TASK LEADER.

PHASE 2 IN EFFECT

NOT APPLICABLE

RELEASED - Printed documents may be obsolete; validate prior to use.

1.7 SPECIAL INSTRUCTIONS

1. PRIOR TO THE PERFORMANCE OF THIS OMI, A FORMAL CONSTRAINTS REVIEW WILL BE CONDUCTED.

2. PRIOR TO THE PERFORMANCE OF THIS OMI, A FORMAL PRE-TEST BRIEFING WILL BE CONDUCTED WITHIN 72 HOURS PRIOR TO THE START OF OPERATIONS. THE FOLLOWING ENGINEERING DISCIPLINES ARE REQUIRED TO BE PRESENT AT THE PRE-TEST BRIEFING:

   SYSTEMS ENGINEERS – NASA/CAPPS (EPS, GNC, VIDEO, AUDIO, MRDL/HRDL, IAA, ECLSS, C&DH, TCS, FE, YOPS)
   SAFETY REPRESENTATIVE – CAPPS
   PAYLOAD TEST CONDUCTOR – CAPPS
   QUALITY ENGINEERING – NASA/CAPPS
   TECHNICAL INTEGRATION ENGR – NASA
   NASA TEST DIRECTOR – NASA
   NODE 2 PROJECT OFFICE - MSFC
   JEM PROJECT OFFICE – NASDA
   QUALITY ASSURANCE – NASA/CAPPS

3. THE PAYLOAD TEST CONDUCTOR HAS RESPONSIBILITY FOR THE IMPLEMENTATION OF THIS OMI. ALL PERSONNEL PARTICIPATING IN THE OMI ARE UNDER HIS OVERALL CONTROL AND DIRECTION DURING TEST OPERATIONS. ANY OPERATIONAL PROBLEMS, CONCERNS OR CHANGES AFFECTING ACCOMPLISHMENT OF OMI TASKS OR OBJECTIVES, MUST BE COORDINATED WITH THE PAYLOAD TEST CONDUCTOR PRIOR TO IMPLEMENTATION, EXCEPT IN CASES OF EMERGENCY.

4. ANY PERSON PARTICIPATING IN AN OPERATION CAN CALL A STOP TO THE OPERATION IF IT IS APPARENT THAT TO CONTINUE WOULD EXPOSE PERSONNEL OR PROPERTY TO A DANGEROUS OR UNACCEPTABLE RISK.

RELEASED - Printed documents may be obsolete; validate prior to use.

1.7 SPECIAL INSTRUCTIONS (CONTINUED)

5. IN THE EVENT OF LOSS OF OIS COMMUNICATIONS, USE REGULAR TELEPHONE TO ESTABLISH COMMUNICATIONS AND PROCEED AT PTC DIRECTION.

CONTROL ROOM 2 PTC	867-6293 (MEIT CONTROL CENTER)
CONTROL ROOM 3	867-6239
NASDA TC	6296
MSFC N2 PROJECTS OFFICE	6296
QUALITY	867-5511/5512
TIE	867-6297
EPS	867-6359
C&T	867-6394
FSW	867-6383
C&DH	867-6243
TCS	6340
ECLSS	6340
TCMS CONSOLE	867-6663
TCMS CONTROL ROOM	867-6629
TCDS (USER ROOM 8)	867-6664
FLIGHT EMULATOR	867-0522
PDAS CONSOLE	6241
YOPS	867-0523/6443

ALL COMM PROBLEMS WILL BE REPORTED TO P/L COMM 7-4428.

6. ALL WORK STOPPAGES WILL BE DIRECTLY REPORTED TO THE PAYLOAD TEST CONDUCTOR.

7. OPERATION INSTRUCTIONS/OPERATION SUPPORT SETUPS

A. THE REQUIRED OPERATION INSTRUCTIONS AND OPERATION SUPPORT SETUPS CAN BE REPEATED AS REQUIRED.

B. ALL SEQUENCES IN THIS OMI ARE THE MASTER COPY AND WILL NOT BE BOUGHT OFF. ALL EXECUTIONS ON A SEQUENCE SHALL BE VIA A COPY OF THE OPERATION INSTRUCTIONS OR OPERATION SUPPORT SETUP. ALL PERMANENT DEVIATIONS TO THE SEQUENCES SHALL BE ENTERED INTO THE MASTER, THUS ENSURING SUBSEQUENT OPERATIONS INCLUDE THE DEVIATION.

RELEASED - Printed documents may be obsolete; validate prior to use.

1.7 SPECIAL INSTRUCTIONS (CONTINUED)

8. IF AN OPERATION INSTRUCTION WILL NOT OR CAN NOT BE COMPLETED BECAUSE OF SCHEDULING/SUPPORT/IPR CONSTRAINTS, QA WITH THE CONCURRENCE OF TIE AND PTC, WILL DRAW A LINE HORIZONTALLY WITHIN THE OPERATION INSTRUCTION INDICATING WHERE EXECUTION CEASED AND ANNOTATE GMT AND REASON.

9. WHEN TEST INTERRUPTIONS OCCUR (IPR/PR TROUBLESHOOTING, DAILY OPS, ETC.), DEVS AND/OR IPR/PR MAY BE USED TO DECONFIGURE FOR TEST INTERRUPTION AND RECONFIGURE FOR TEST COMPLETION.

10. NOTES MAY BE USED TO INDICATE THE COMPLETION OF AN OMRS AT THE END OF A SERIES OF STEPS. STEPS WITHIN THE SERIES MAY NOT BE ESSENTIAL TO THE OMRS. OUT OF ORDER PERFORMANCE REQUIRES AFFECTED SYSTEMS AND INTEGRATION CONCURRENCE ANNOTATED BY QA OR ENGINEERING IN AN ENGINEERING NOTE. ACTUAL IMPACT WILL BE DETERMINED BY THE SYSTEMS AND INTEGRATION ENGINEER.

11. WHEN MISSION SPECIALIST (CREW MEMBER) IS REQUESTED TO PERFORM A TECHNICIAN FUNCTION, QUALITY WILL ANNOTATE THE VERIFICATION/BUYOFF "CREW" AND WILL STAMP AND DATE.

12. THROUGHOUT THIS OMI, THE CALL SIGN "MS1" REFERS TO THE OPERATOR PERFORMING USOS OPERATIONS NORMALLY CONDUCTED BY THE CREW, SUCH AS KEYBD ENTRIES AND PCS LCD VERIFICATIONS, SWITCH THROWS AND PANEL VERIFICATION ON THE PAYLOAD PANELS (E.G. RWS). IF A SECOND OPERATOR IS REQUIRED, THEIR CALL SIGN WILL BE ASSIGNED BY THE PTC.

13. THROUGHOUT THIS OMI, THE CALL SIGN "MJ1" REFERS TO THE OPERATOR PERFORMING JAPANESE OPERATIONS NORMALLY CONDUCTED BY THE CREW, SUCH AS KEYBD ENTRIES AND SLT/RLT LCD VERIFICATIONS, SWITCH THROWS AND PANEL VERIFICATION ON THE PANELS (E.G. CCP). IF A SECOND OPERATOR IS REQUIRED, THEIR CALL SIGN WILL BE ASSIGNED BY THE PTC.

RELEASED - Printed documents may be obsolete; validate prior to use.

1.7 SPECIAL INSTRUCTIONS (CONTINUED)

NONCONFORMANCES/WAIVERS

14. IPR/PR VERIFICATION WITHIN PROCEDURES:

    A. AT MANY STEPS, REFERENCE NOTES WILL EXIST FOR OPEN NCR'S (PR'S (SUCH AS PVCS PR'S OR SCR'S), IPR'S, AND DN'S). IF THE ANOMALY REPEATS, THE OCCURRENCE WILL BE LOGGED AS A REPEAT TO THE ORIGINAL ANOMALY IN THE OUTER PAGE MARGIN OF THE AS-RUN COPY NEXT TO THAT STEP. NO NEW IPR/PR/DN WILL BE TAKEN.

    B. IF, HOWEVER, THE ANOMALY DOES NOT REPEAT AND THE STEP EXECUTES PER SPECIFICATION, THE ENGINEER WILL ADDRESS THIS SCENARIO RELATIVE TO THE ORIGINAL ANOMALY, AND COORDINATE WITH THE ANOMALY OWNER, AS APPROPRIATE.

    C. THE ANOMALY SHALL BE ANNOTATED AGAINST EACH STEP AT WHICH IT OCCURS. THE ENGINEER WILL DETERMINE IF DATA IS REQUIRED FROM SUBSEQUENT OCCURENCES OF THE SAME ANOMALY.

    D. AT SOME STEPS, REFERENCE NOTES MAY EXIST FOR CLOSED ("FIXED") IPR'S, PR'S, DN'S. IF THE ANOMALY REPEATS A 'NEW' IPR/PR SHALL BE TAKEN.

KNOWN DOCUMENTED NONCONFORMANCES OR ERRORS

15. IF THERE IS A REOCCURRENCE OF A KNOWN DOCUMENTED NONCONFORMANCE OR ERROR DURING ANY PHASE OF MEIT 3, THE APPLICABLE STEP WILL BE ANNOTATED BY QA OR ENGINEERING WITH THE FOLLOWING INFORMATION:

    NONCONFORMANCE STAMP
    NONCONFORMANCE REPORTING SYSTEM (BNS, PRACA, PVCS, NASDA, ALENIA, ETC)
    NONCONFORMANCE REPORT NUMBER
    NONCONFORMANCE DESCRIPTION

    THE NONCONFORMANCE INFORMATION IS REQUIRED BEFORE THE END OF SHIFT. IF THE INFORMATION CANNOT BE OBTAINED BEFORE THE END OF THE SHIFT, THEN A KSC IPR WILL BE OPENED.

16. IN ADDITION, IF THERE IS A NEED FOR ACTIVE STEPS TO BE PERFORMED TO RECOVER FROM THIS NONCONFORMANCE, A DEVIATION WILL BE USED FOR THE RECOVERY STEPS WITH THE NONCONFORMANCE INFORMATION STATED IN THE "REASON" SECTION.

RELEASED - Printed documents may be obsolete; validate prior to use.

1.7 SPECIAL INSTRUCTIONS (CONTINUED)

17. IN ADDITION, IF THERE IS A NEED FOR TROUBLESHOOTING TO HELP GATHER DATA FOR THE NONCONFORMANCE, A KSC IPR WILL BE OPENED IN THE BNS SYSTEM TO DOCUMENT THE TROUBLESHOOTING STEPS. THE IPR WILL CONTAIN AN INTERIM SUMMARY AND WILL BE TRANSFERRED TO THE ORIGINAL NONCONFORMANCE REPORT IN THE ORIGINAL NONCONFORMANCE REPORTING SYSTEM. KSC WILL NOT BE RESPONSIBLE FOR THE RESOLUTION OF THE NONCONFORMANCE.

18. THE PROCEDURE MAY CONTAIN NOTES ABOUT THE KNOWN NONCONFORMANCES TO ASSIST THE SYSTEM ENGINEER IN TEST EXECUTION.

19. THE LIST OF NASDA EXPECTED ERRORS WILL BE DOCUMENTED IN AN APPENDIX TO R0031.

20. ALL ANOMALOUS CONDITIONS RESULTING IN NONCONFORMANCE PAPER WILL BE OPENED AT THE IPR LEVEL. UPGRADE TO A PR/DR WILL ONLY OCCUR WITH IPR WORKSTEP/TEST TEAM AUTHORITY.

21. THE AFFECTED SYSTEM ENGINEER AND PTC CONCURRENCE IS REQUIRED TO WAIVE A CONSTRAINT.

22. POWER SHALL NOT BE APPLIED OR RESTORED IN THE EVENT OF FAILURE TO ANY PAYLOAD ELEMENT WITHOUT PTC, TIE, NODE 2 AND JEM CONCURRENCE.

23. IN THE EVENT OF AN USOS MDM OR FEU GOING TO DIAGNOSTIC MODE UNEXPECTEDLY, DATA DUMPS MAY BE INITIATED AFTER CONFIRMING THE MDM/FEU STATE. THE INFORMATION CONCERNING THE DATA DUMP WILL BE ANNOTATED ON THE NONCONFORMANCE UTILIZED FOR THE EVENT.

24. SPECIFIC INFORMATION IS REQUIRED TO BE DOCUMENTED IN AN IPR OR PR WHEN THE IPR OR PR IS OPENEND TO AID IN COMMUNICATING THE CONFIGURATION OF THE FLIGHT HARDWARE CDH SYSTEMS. THIS PAGE TWO WILL BE INCLUDED IN ALL KSC IPR AND PR OPENED DURING MEIT3.

RELEASED - Printed documents may be obsolete; validate prior to use.

1.7 SPECIAL INSTRUCTIONS (CONTINUED)

DATA VERIFICATION/COLLECTION

25. FOR STEPS INVOLVING VERIFICATION OF ENUMERATED DATA, THE STEP WILL SPECIFY THE STATE CONVERSION TEXT OR A STATE CODE VALUE. PCS AND GROUND DISPLAYS OFTEN OVERRIDE THE STANDARD OUT ENUMERATION FOR LENGTH OR CLARITY. FOR EXAMPLE, FOR USOS RPC SWITCH STATUSES, “NOT-OFF-OK” MAY BE DISPLAYED AS “CL”. WHEN THERE ARE DIFFERENCES BETWEEN TWO DIFFERENT SOURCES OF DATA, SUCH AS BETWEEN PCS AND TCMS, THE SYSTEM ENGINEER WILL DETERMINE WHETHER THE ENUMERATION TEXTS ARE EQUIVALENT. (THE RAW STATE CODE VALUES ON THE TWO SOURCES SHOULD BE THE SAME FOR A PARTICULAR SAMPLE OF THE PUI.) WHEN A DIFFERENT STATUS IS DISPLAYED THAN SPECIFIED IN THE STEP, THE SYSTEM AND INTEGRATION ENGINEERS SHALL DETERMINE IF THE DIFFERENCE NEEDS TO BE DOCUMENTED VIA A DEVIATION OR NONCONFORMANCE. OTHERWISE, INCONSISTENCIES MAY BE “PEN AND INK” CHANGES TO THE PROCEDURE.

26. WHEN MEASUREMENTS APPEAR IN ENGLISH AND METRIC IS EXPECTED (OR VICE VERSA), STANDARD CONVERSION TABLES MAY BE USED, OR THE EXPECTED VALUE MAY BE CALCULATED.

27. VERIFICATION MAY BE PERFORMED VIA DATA RETRIEVALS WHEN THE PARAMETER CHANGES COULD NOT BE VERIFIED DURING REALTIME UNLESS DISPLAY VERIFICATION IS REQUIRED BY OMRS.

28. VERIFICATIONS MADE FROM A DISPLAY CAN BE MADE FROM A DIFFERENT DISPLAY SOURCE THAN WHAT IS CALLED BY THE PROCEDURE (EXAMPLE TCMS VS. PCS)AS LONG AS THE DISPLAY USED IS NOT SPECIFIED IN THE ORMS. QA WILL ANNOTATE IN MARGIN WHICH SOURCE WAS USED.

29. MDM AND FEU DATA DUMPS VIA THE MATE MAY BE PERFORMED WITHOUT A DEVIATION, WITH THE CONCURRENCE OF THE TEST TEAM. THIS DOES NOT INCLUDE JCP/MDP/PDH, WHICH UTILIZE DIFFERENT COMMAND HEADER VALUES THAN PROVIDED THROUGH THE MATE FMT. DURING MEIT3, THE CCS CPU UTILIZATION MEMORY DUMP SHOULD BE RESTARTED AFTER OTHER MEMORY DUMPS ARE NO LONGER REQUIRED (CCS MEMORY ADDRESS 7DD138).

30. PASSIVE SLT/RLT DISPLAY WINDOW OPERATIONS MAY BE PERFORMED AS REQUIRED BY TASK LEADER WITHOUT NEED OF DEVIATION INCLUDING, BUT NOT LIMITED TO:

    A. OPEN, CLOSE, MINIMIZE, RESTORE AND/OR MOVE SLT/RLT WINDOWS
    B. NAVIGATION TO A SPECIFIC DISPLAY.

31. HARD COPY OR PCS PHOTOGRAPHS MAY BE TAKEN ANY TIME AT THE REQUEST OF THE TEST CONDUCTOR OR SYSTEMS ENGINEER DURING THE PERFORMANCE OF THIS TEST.

32. THE PRIMARY C&C COMMAND LOG FILES MAY BE TRANSFERRED FROM THE C&C DISK TO A PCS USING THE FMT “GET” FUNCTION PER KCDH OR SSFE DIRECTION. THE FILES ARE CIRCULAR FILES AND MY BE OBTAINED MULTIPLE TIMES. DIRECTORIES MAY BE CREATED ON THE PCS TO STORE THE RETRIEVED FILES.

RELEASED - Printed documents may be obsolete; validate prior to use.

1.7 SPECIAL INSTRUCTIONS (CONTINUED)

WORK AREA

33. WRIST STATS SHALL BE WORN WHENEVER PERSONNEL OR TOOLS MAY COME IN CONTACT WITH EXPOSED ELECTRICAL CIRCUITRY. THE REMOVAL/REPLACEMENT OF CONNECTOR DUST CAPS AND CONNECTING/DISCONNECTING OF CONNECTORS ARE SUCH CIRCUMSTANCES.

34. EGSE SURVEILLANCE CAMERAS MAY BE POSITIONED, ADDED, OR REMOVED TO SUPPORT TESTING AS REQUIRED WITH SYSTEM ENGINEER CONCURRENCE.

35. PORTABLE/MOBILE EQUIPMENT, LADDERS, STANDS, ETC. ARE TO BE UTILIZED TO GAIN ACCESS WITHOUT SPECIFIC CALLOUT IN THIS OMI. THE TASK LEADER MAY VERBALLY ALLOW INSTALLATION AND USE OF THIS EQUIPMENT. USE OF SUCH EQUIPMENT IS TO BE COORDINATED WITH THE YOPS & PTC.

PCS

36. THE DESIGNATION OF WHICH PCS TO USE FOR COMMANDING OR TELEMETRY VERIFICATION DURING TESTING MAY OR MAY NOT BE CALLED OUT IN THE PROCEDURES. IN EITHER CASE THE LOCATION MAY BE CHANGED OR ADDED REAL-TIME PER TASK LEADER DISCRETION WITHOUT A DEVIATION UNLESS A SPECIFIC PCS IS SPECIFIED FOR THE OMRS.

37. PCS OPERATORS MAY PERFORM PASSIVE CONSOLE OPERATIONS AS REQUIRED WITHOUT ANY ADDITIONAL DOCUMENTATION. SUCH AS OPENING, CLOSING, MINIMIZING, RESTORING, AND/OR MOVING ANY PCS DISPLAY WINDOW NEEDED IN THE PERFORMANCE OF A STEP OR PER TASK LEADER DIRECTION. ACTIVATING PROGRAMS, CHANGING BETWEEN ACTIVE PROGRAMS, DISPLAY MONITORING OF MEASUREMENTS, ADDING OF DDCT AND STATUSING OF PROGRAM UNIQUE IDENTIFIERS.

38. PASSIVE UNIX COMMANDS MAY BE PERFORMED AT ANY TIME IN THE PCS TERMINAL WINDOW WITH CONCURRENCE OF TASK LEADER.

39. ALL PCS NAVIGATION PATH CALLOUTS ARE BASED ON THE BEST AVAILABLE INFORMATION AT TIME OF PUBLICATION AND SHOULD BE USED AS REFERENCE ONLY. NAVIGATE PCS DISPLAYS AT TASK LEADER DIRECTION. PATH CALLOUTS MAY BE CHANGED BY “PEN-AND-INK” IN AS RUN COPY OF PROCEDURE WITHOUT DEVIATION.

RELEASED - Printed documents may be obsolete; validate prior to use.

1.7 SPECIAL INSTRUCTIONS (CONTINUED)

40. THE PCS OPERATOR MAY RESTART PCSCDS AND/OR RECONNECT THE PCS AT TO THE DIRECTION OF KCDH. CLOSE ALL DISPLAYS PRIOR TO RECONNECT. WHEN THE PCS RECONNECTS TO THE MDM, ALL OPEN DISPLAY PAGES CLOSE AND THE HOME PAGE AND CAUTION AND WARNING TOOL BAR AUTOMATICALLY RE-OPEN. OTHER DISPLAYS MAY BE RE-OPENED BY THE PCS OPERATOR AS REQUIRED.

41. IF A WORKSTEP CALLS FOR THE ISSUANCE OF A GIVEN COMMAND, ALL PCS STEPS NEEDED TO ISSUE THAT SINGLE COMMAND ARE AUTHORIZED EVEN IF NOT EXPLICITLY STATED. THE TWO CASES THAT APPLY ARE: 1) WHEN A COMMAND REQUIRES SELECTING A COMMAND BUTTON AND THEN PRESSING 'EXECUTE' TO ACTUALLY SEND THE COMMAND AND 2) WHEN A CONFIRMATION DIALOG BOX APPEARS AFTER PRESSING A COMMAND BUTTON AND/OR THE EXECUTE BUTTON, THE CONFIRMATION BOX MAY BE CLEARED BY PRESSING 'OK'. THE PCS OPERATOR WILL REPORT ALL STEPS TAKEN OVER OIS PRIOR TO PERFORMING THEM. IN BOTH OF THE ABOVE CASES ONLY ONE COMMAND IS SENT FROM THE PCS TO FLIGHT SOFTWARE. THIS SPECIAL INSTRUCTION DOES NOT APPLY TO TWO STEP COMMANDS (ARM/FIRE) WHICH CONSIST OF TWO ACTUAL COMMANDS TO FLIGHT SOFTWARE.

42. THE PCS POP-UP DIALOG BOXES WHICH ARE INFORMATIONAL ONLY MAY BE CLEARED WITH TASK/LEADER CONCURRENCE, WITHOUT NEED FOR A DEVIATION, OTHER PCS POP-UP DIALOG BOXES MAY REQUIRE DOCUMENTATION.

43. IF THE PCS DATA FIELD IS ALL ASTERISKS, PLACE CURSOR IN DATA FIELD TO READ STATUS.

44. THE PCS OPERATOR MAY RIGHT-CLICK ON ANY PCS DISPLAY FIELD OR BUTTON TO DISPLAY THE UNDERLYING PUI INFORMATION. COMMAND BUTTONS HAVE PUI ENDING WITH A ‘K’ AND MAY NOT BE ISSUED (PER A LEFT-CLICK) WITHOUT A WAD WORKSTEP. THE RESULTING DISPLAY WINDOWS MAY BE CLOSED VIA LEFT-CLICK WITHIN THE WINDOW OR BY PRESSING THE “ESC” BUTTON ON THE KEYBOARD.

    A. RIGHT CLICK ON DATA FIELD: SIGNAL PUI, OBJECT NAME
    B. LEFT CLICK ON DATA FIELD: NAME\DESCRIPTION, PLOT LIMITS
    C. RIGHT CLICK ON COMMAND BUTTON: COMMAND PUI, NAME/DESCRIPTION.
    D. LEFT CLICK ON COMMAND BUTTON: ISSUES COMMAND

RELEASED - Printed documents may be obsolete; validate prior to use.

1.7 SPECIAL INSTRUCTIONS (CONTINUED)

45. TO ACCESS THE REALTIME VALUE OF A SIGNAL PUI ON PCS, OPEN A TERMINAL WINDOW AND ENTER:

    VIEWPUI <PUI> &
    THE PUI IS THE 13 CHARACTER PARAMETER IN UPPER CASE. MULTIPLE "VIEWPUI" WINDOWS MAY BE OPENED CONCURRENTLY. A DDCT CONTAINING THE PUI MUST BE ACTIVE IN ORDER TO VIEW THE DATA.

46. THE PCS NOTIFIES THE OPERATOR OF STATUS OF THE 1553 CONNECTION AND INCOMING DATA BY THE FOLLOWING DATA FIELD COLORS AND NOTATIONS:

    A. PURPLE FIELD WITH "D" AT THE FAR RIGHT = PROPER 1553 CONNECTION IS CONFIRMED, CDS IS RUNNING, BUT RECEIVING NO VALUES FOR THIS FIELD
    B. CYAN FIELD WITH "?" AT THE FAR RIGHT = 1553 INTERFACE IS NOT ACTIVE, AND SO PARAMETER VALUES ARE NOT AVAILABLE.
    C. CYAN FIELD WITH "S" AT THE FAR RIGHT = STATIC DATA. HAD VALID DATA BUT LOST IT.

47. THE PCS CLOCK WINDOW MAY BE DISPLAYED AT ANY TIME PER TASK LEADER'S DIRECTION WITHOUT THE NEED OF DEVIATION, PER THE FOLLOWING STEPS.

    A. RIGHT CLICK ON DESKTOP.
    B. SELECT "PROGRAMS"
    C. SELECT "CLOCK…"'

48. PCS LOG FILES MAY BE SAVED AND TRANSFERRED FROM THE PCS ANY TIME AT THE REQUEST OF THE TEST CONDUCTOR OR SYSTEMS ENGINEER.

49. PCS SCREEN CAPTURES MAY BE PERFORMED AT ANY TIME PER TASK LEADER'S INSTRUCTION.

50. IN THE EVENT OF A USER INTERFACE/DISPLAY 'FREEZE' ON THE USOS PCS, KCDH MAY INSTRUCT THE PCS OPERATOR TO POWER CYCLE THE PCS WITHOUT DEVIATION (EXISTING PCS PR 25079). REFERENCE APPENDIX C FOR DATA COLLECTION GUIDELINES IN THE EVENT OF A PCS LOCKUP OR AUTONOMOUS REBOOT. SOME OF THE REFERENCED INFORMATION MAY NOT BE AVAILABLE DEPENDING ON THE PARTICULAR SCENARIO. MULTIPLE OCCURRENCES OF PCS SYSTEM LEVEL ANOMALIES MAY BE DOCUMENTED ON SINGLE IPRS. IF THE "NEXT GENERATION" PCS IS UTILIZED, THE DATA TO BE COLLECTED MAY NEED TO BE REVISED.

51. BECAUSE UNIX IS CASE-SENSITIVE, THE UNIX-RELATED OPERATIONS (E.G. PCS, SUN, TCMS) IN THIS OMI ARE INTENDED TO BE DEPICTED IN THE COMBINATIONS OF UPPER AND/OR LOWER CASE AS THE OPERATOR WILL SEE THE DISPLAY DATA OR TYPE THE DESIRED COMMANDS. (SOMETIMES THE OMI TEMPLATE FORCES ALL CHARACTERS TO UPPER CASE.)

RELEASED - Printed documents may be obsolete; validate prior to use.

1.7 SPECIAL INSTRUCTIONS (CONTINUED)

FLIGHT EMULATOR

52. ISS FEU FLIGHT SOFTWARE-RELATED ACTIVITIES, WHICH INCLUDE PPL LOADS, MDM DATA DUMPS, INDIVIDUAL MDM ACTIV/DEACTIV'S AND PCS OPERATIONS ARE CONTAINED IN SUB-TASK OMI R2005, "FLIGHT EMULATOR ACTIVATION AND CHECKOUT". THE CALLING STEP IN THE CONTROLLING WAD (OMI, IPR, PR, ETC.) WILL CONTAIN PERTINENT INFORMATION THAT PROVIDES TRACEABILITY OF THESE FLIGHT SOFTWARE ACTIVITIES. THIS INFORMATION WILL EITHER BE PART OF THE ORIGINAL CALLING STEP, OR BE RECORDED AT AND/OR ATTACHED TO THE CALLING STEP BY QM PER KCDH/KFSW DIRECTION.

53. FOR THE DATA BUS TESTER EQUIP, MONITORING/ARCHIVING CAN BE STOPPED/STARTED AND THE TRIGGERING CAN BE CHANGED AS REQUIRED PER TASK LEADER DIRECTION TO SUPPORT TESTING.

54. DURING THE PERFORMANCE OF THIS TEST, THE FOLLOWING SIMULATIONS MAY BE REBOOTED AS REQUIRED WITHOUT REQUIRING A DEVIATION TO BE INITIATED OR PRACA INITIATED. AN ENGINEERING NOTE WILL BE ANNOTATED IN THE PROCEDURE WHERE A SIMULATION REBOOT WAS PERFORMED. SIMULATIONS ARE:

    CES SIMULATION (POSSIBLE IMPACTS: SBAND TLM, TIME SYNC, PCS)
    GN&C SIMULATION

55. ATTEMPTED MATE COMMANDS THAT DO NOT ACTUALLY LEAVE THE MATE MAY BE REISSUED WITHOUT THE NEED FOR A DEVIATION.

56. THE DATA LOGGING TAPE ON THE CES MATE WILL BE CHANGED OUT ON A ROUTINE BASIS. THE TAPES WILL BE LABELED WITH THE DATE, AND START/STOP TIMES FOR ARCHIVAL PURPOSES.

57. MATE SCRIPT OUTLINES WILL BE ATTACHED TO THE PROCEDURE PRIOR TO THE START OF THE TEST IN APPENDIX E OF R0031V3. IF UPDATES ARE MADE, THE UPDATED OUTLINE(S) WILL ALSO BE ATTACHED.

58. CONSOLE OPERATORS ON MATE MAY PERFORM PASSIVE CONSOLE OPERATIONS AS REQUIRED WITHOUT ANY ADDITIONAL DOCUMENTATION, SUCH AS ACTIVATING PROGRAMS, SELECTING DISPLAYS, PERFORMING DATA RETRIEVALS, CHANGING BETWEEN ACTIVE PROGRAMS, DISPLAY MONITORING OF MEASUREMENTS, AND STATUSING OF PROGRAM UNIQUE IDENTIFIERS.

RELEASED - Printed documents may be obsolete; validate prior to use.

1.7 SPECIAL INSTRUCTIONS (CONTINUED)

TCMS

59. THE TCMS SYSTEM MAY BE REBOOTED EITHER PARTIALLY OR FULLY AT ANY TIME WITH TEST TEAM CONCURRENCE. DATA OCCURRING DURING THE REBOOT MAY NOT BE ARCHIVED DEPENDING ON THE TCMS SUBSYSTEMS BEING REBOOTED.

60. THE TCMS SYSTEM HAS AN EXCEPTION MONITOR (EMON), WHICH WILL SHOW THE EXCEPTION STATUS OF REQUESTED MEASUREMENTS. ONLY THE EXCEPTION FOR MEASUREMENTS BEING MONITORED ON THAT DISPLAY PROCESSOR (DP) WILL BE ANNUNCIATED AT THAT DISPLAY. EMON DOES NOT SHOW THE CURRENT VALUE OF THE PARAMETER. TO VIEW REAL-TIME MEASUREMENTS/VALUES OF THE PARAMETER(S), RUN THE DATA MONITOR (DMON) APPLICATION FROM MAINSCREEN.

61. TCMS IS PROCESSING SUBSETS OF S-BAND TELEMETRY (AS IT GOES FROM THE C&C TO THE ACBSP), AND CYCLIC DATA FOR NODE2 MDMS, PMCU MDM, JCP AND MDP. SOME PARAMETERS ARE PROCESSED FROM BOTH TELEMETRY AND CYCLIC DATA. TO DISTINGUISH THE SOURCE, A 14TH CHARACTER HAS BEEN ADDED TO HE PUI FOR CYCLIC DATA. A 14TH CHARACTER OF “1” INDICATES PMCU OR JCP-A CYCLIC DATA; AND A “2” INDICATES NODE2 MDMS, JCP-B OR MDP CYCLIC DATA. PUIS PROCESSED THROUGH S-BAN DO NOT HAVE A 14TH CHARACTER.

62. THE ENGINEERING TITLES FOR THE PUIS PROCESSED BY TCMS MAY HAVE BEEN ABBREVIATED IN ORDER TO FIT WITHIN THE NUMBER OF CHARACTERS AVAILABLE ON TCMS.

63. CONSOLE OPERATORS ON TCMS MAY PERFORM PASSIVE CONSOLE OPERATIONS AS REQUIRED WITHOUT ANY ADDITIONAL DOCUMENTATION, SUCH AS ACTIVATING PROGRAMS, SELECTING DISPLAYS, PERFORMING DATA RETRIEVALS, CHANGING BETWEEN ACTIVE PROGRAMS, DISPLAY MONITORING OF MEASUREMENTS, AND STATUSING OF PUIS.

RELEASED - Printed documents may be obsolete; validate prior to use.

1.7 SPECIAL INSTRUCTIONS (CONTINUED)

64. LOGIN TO THE APPLICATION PROCESSOR MAY BE PERFORMED AS REQUIRED AT ANY OF THE USER CONSOLES. LOGIN SHALL BE PERFORMED AS FOLLOWS:

A. AT THE XTERM CONSOLE IN USER CONTROL ROOM, LOGIN TO THE AP.

1. IN THE LOGIN CHOOSER WINDOW UNDER DEFAULT HOST SELECT AP HOST, “RSGAP**3**”.

2. CLICK “OK”

B. AT THE LOGIN SCREEN ENTER:

1. <USER NAME>, PRESS <RETURN>

2. <PASSWORD>, PRESS <RETURN>

C. IN THE XTERM WINDOW, WHEN THE PROMPT APPEARS ASKING IF THE DISPLAY IS CORRECT, ENTER:

1. PRESS <RETURN>

D. WHEN PROMPTED TO START MAINSCREEN ENTER:

1. Y, PRESS <RETURN>

65. LOGOUT OF THE APPLICATION PROCESSOR MAY BE PERFORMED AS REQUIRED AT ANY OF THE USER CONSOLES. LOGOUT SHALL BE PERFORMED AS FOLLOWS:

NOTE

UNIX COMMAND LINE ENTRIES ARE CASE SENSITIVE.

A. FOR EACH ACTIVE APPLICATION SOFTWARE DISPLAY: CLICK THE “CLOSE APP” BUTTON IN THE UPPER RIGHT SECTION OF THE DISPLAY. IF THE “CLOSE APP” BUTTON DOES NOT EXIST, CLICK THE “QUIT” BUTTON IN THE UPPER RIGHT SECTION OF THE DISPLAY.

B. FROM THE SYSTEM MESSAGE MENU SELECT:

1. QUIT

C. FROM TCMS MAINSCREEN SELECT:

1. LOGOUT
2. OK

RELEASED - Printed documents may be obsolete; validate prior to use.

1.7 SPECIAL INSTRUCTIONS (CONTINUED)

D. IN THE XTERM WINDOW PRESS <RETURN> TO VIEW THE PROMPT, ENTER:

1. EXIT, PRESS <RETURN>

E. ON TOOLCHEST ICON SELECT DESKTOP

1. LOGOUT
2. YES

F. WHEN PROMPTED TO SHUTDOWN WINDOWS AND LOGOUT SELECT:

1. YES

CAUTION AND WARNING

66. CAUTIONS & WARNINGS – EXPECTED CONDITIONS DO NOT REQUIRE THAT A NON-CONFORMANCE BE WRITTEN.

67. THE CAUTION AND WARNING DISPLAY SHALL BE ACTIVE AND ON TOP ON AT LEAST ONE PCS WITH VIDEO AVAILABLE FOR TEAM VISIBILITY. OTHER ACTIVITIES ON THAT PCS SHOULD BE KEPT TO A MINIMUM.

68. THE SLT/RLT OPERATOR MAY ACKNOWLEDGE MESSAGES ON SLT/RLT C&W SUMMARY PAGES PER TASK LEADER AND AFFECTED SYSTEM DIRECTION WITHOUT THE NEED FOR DEVIATION.

69. THE SLT OPERATOR MAY SILENCE ANY SLT BEEPING THAT IS CAUSED BY A C&W EVENT WITHOUT ASKING PERMISSION.

70. THE PCS OPERATOR MAY ACKNOWLEDGE MESSAGES ON PCS C&W SUMMARY PAGES PER TASK LEADER AND AFFECTED SYSTEM DIRECTION WITHOUT THE NEED FOR DEVIATION.

71. VIEWING OF ADVISORIES MAY BE TURNED ON OR OFF PER KCDH CONCURRENCE WITHOUT NEED FOR A WAD STEP OR DEVIATION. TURNING ADVISORIES ON OR OFF ONLY AFFECTS THE C&W DISPLAY AND DOES NOT SEND ANY COMMAND TO FLIGHT HARDWARE. C&W ALARMS/TONES MAY BE SILENCED AT KCDH OR SYSTEM ENGINEER DIRECTION.

72. ANY MESSAGE ON THE PCS C&W SUMMARY PAGE MAY BE INHIBITED/ENABLED AS LONG AS THE SYSTEM ENGINEERS AFFECTED BY THE MESSAGE CONCUR TO THE INHIBIT/ENABLE. WHEN A MESSAGE IS INHIBITED THERE WILL BE NO RECORD OF ITS ASSOCIATED EVENT OCCURING AGAIN, UNLESS THE C&C MDM (PRIME) IS RE-INITIALIZED OR THE MESSAGE IS RE-ENABLED. THE EVENT CODE OF AN INHIBITED EVENT WILL BE RECORDED AT THE STEP WHERE THE INHIBIT/ENABLE WAS PERFORMED.

73. DUE TO UNIQUE JEM DUAL CAUTION AND WARNING PANEL CONFIGURATION, C&W CAN BE SILENCED OR TRIGGERED FROM EITHER JEM WORKSTATION RACK OR JEM RMS RACK WITH NASDA AND KCDH CONCURRENCE WITHOUT DEVIATION UNLESS SPECIFIED BY OMRS REQUIREMENT.

RELEASED - Printed documents may be obsolete; validate prior to use.

1.7 SPECIAL INSTRUCTIONS (CONTINUED)

74. CAUTION AND WARNING PANEL LABELS ARE CURRENTLY BEING UPDATED TO REFLECT ΔP STATUS AS ΔP/ΔT. REFERENCE TO ΔP WILL BE EQUIVALENT TO ΔP/ΔT WITHOUT NEED OF DEVIATION.

75. CAUTION AND WARNING TONES CAN BE SILENCED PER TASK LEADER DIRECTION.

FLUIDS

76. FOR TCS PRESSURE, TEMPERATURE, AND FLOWRATE PARAMETERS, THE SYSTEMS ENGINEER WILL RECORD THE VALUE AND UNITS. PCS PARAMETERS ARE DISPLAYED IN MMHG, DEG. C, AND KG/HR FOR PRESSURE, TEMPERATURE, AND FLOWRATE RESPECTIVELY.

EPS

77. US LAB DDCU/RPCM SIMULATOR COOLING CAN BE ACTIVATED OR DEACTIVATED AS REQUIRED DURING TEST PER KEPS OR DESE DIRECTION.

C&T

78. THE JEM-PM HRMS COVER MAY BE REMOVED, INSTALLED, OR STOWED BY NASDA OR THEIR CONTRACTOR PERSONNEL AS NECESSARY TO SUPPORT PROCEDURE STEPS WITHOUT SPECIFIC CALLOUT.

79. THE JEM-PM HRMS FLIGHT PATCH CABLE MAY BE CONNECTED AND DISCONNECTED PER SPECIFIC OMI STEP WITHOUT ECDL ENTRY.

80. THE PEHG HAS A KNOWN TIMING ISSUE THAT INTERMITTENTLY CAUSES CORRUPTION OF CCSDS PACKETS BEING TRANSMITTED BY THE GATEWAY. IN THE EVENT OF RECURRENCE, THE SYMPTOMS MAY INCLUDE CCSDS SEQUENCE GAPS AND PACKET LENGTH ERRORS. ANY RECURRENCE SHALL BE RECORDED AS AN ENGINEERING NOTE IN THE AS-RUN PROCEDURE WITHOUT FURTHER TROUBLESHOOTING. RECURRENCE DOES NOT CONSTITUTE AN OMRS VIOLATION AS LONG AS LONG AS CONTINUITY AND CHANNELIZATION BETWEEN THE PEHG-JEM HIGH RATE GATEWAY AND USOS IS DEMONSTRATED. THIS CONDITION WAS PREVIOUSLY DOCUMENTED IN PRACA 2414 AND AI-MEIT-1-TC2R-0084.

81. THE HCOR HAS A KNOWN ISSUE IN WHICH THE HIGH RATE INPUTS MAY LOCK UP WHEN PASSTHROUGH IS ENABLED BUT NO SIGNAL IS PRESENT. THE CONDITION MAY BE RECOVERED BY DISABLING AND THEN RE-ENABLING THE PASSTHROUGH FOR THE SUBJECT INPUT. OCCURRENCE WILL BE RECORDED AS AN ENGINEERING NOTE IN THE AS-RUN PROCEDURE AND RECOVERY STEPS WILL BE PERFORMED ON A DEVIATION WITHOUT THE NEED FOR A NONCONFORMANCE REPORT.

82. THE JEM-PM HRMS HEALTH STATUS (JSDC00FCK100J, ON SLT HRMS PAGE) MAY INDICATE “ABNORMAL” FOLLOWING OPENING OR CLOSURE OF PDB-WS RPC13. THIS IS A KNOWN TIMING ISSUE WHICH IS DOCUMENTED BY NASDA KNOWN ERROR C&DH-S001. OCCURRENCE WILL BE RECORDED AS AN ENGINEERING NOTE IN THE AS-RUN PROCEDURE, AND NO RECOVERY STEPS OR NONCONFORMANCE REPORT ARE REQUIRED.

RELEASED - Printed documents may be obsolete; validate prior to use.

1.7 SPECIAL INSTRUCTIONS (CONTINUED)

83. PBIT FAULTS ARE EXPECTED ON THE PCS AUDIO SUBSYSTEM PAGE WHEN ONLY ONE FIBER OPTIC BUS IS POWERED (I.E. WHEN EITHER ABC 3 OR 4 IS OFF). WHEN THESE ARE OBSERVED, KCTE WILL VERIFY THAT THE ERROR THAT HAS OCCURRED IS THE EXPECTED ONE ON THE PCS AUDIO CBIU DETAILED STATUS PAGE. OCCURRENCE WILL BE RECORDED AS AN ENGINEERING NOTE IN THE AS-RUN PROCEDURE, AND NO RECOVERY STEPS OR NONCONFORMANCE REPORT ARE REQUIRED.

C&DH

84. THE JEM DATA PROCESSING EQUIPMENT (DPE) GROUND SUPPORT EQUIPMENT RECORDS JEM RELATED MIL-STD-1553B BUS DATA. THE SYSTEM RECORDS FOR APPROXIMATELY 8 HOURS, AFTER WHICH APPROXIMATELY HALF AN HOUR IS NEEDED TO PREPARE FOR THE NEXT RECORDING SESSION. THE DPE OPERATOR SHOULD INFORM THE TEST CONDUCTOR WHEN THE DPE WILL NOT BE ACTIVELY RECORDING, AND THEN AGAIN WHEN RECORDING HAS RESUMED. A NEW RECORDING SESSION MAY BE STARTED BEFORE THE PREVIOUS ONE IS FULL TO ENSURE CONTINUOUS RECORDING DURING SPECIFIC TEST ACTIVITIES.

85. THE USOS FLIGHT SOFTWARE CONFIGURATION FOR MEIT3 WILL BE ATTACHED TO THE PROCEDURE PRIOR TO THE START OF THE TEST IN APPENDIX K OF R0031V3. IF NEW SOFTWARE LOADS ARE MADE, THE UPDATES WILL ALSO BE ATTACHED.

86. IN THE EVENT OF A USER INTERFACE/DISPLAY ‘FREEZE’ ON THE JEM SYSTEM LAPTOP TERMINAL (SLT) OR RMS LAPTOP TERMINAL (RLT), KCDH WILL DOCUMENT THE OCCURENCE IN APPENDIX C OF R0031V3. WITH JAPANESE TEST CONDUCTOR CONCURRENCE, KCDH MAY INSTRUCT THE SLT/RLT OPERATOR TO POWER CYCLE THE SLT/RLT WITHOUT DEVIATION.

87. CONTROL BUS (CB-EXT-1, CB-EXT-2) COMMUNICATION TRAFFIC LOGS WILL BE MONITORED AND ARCHIVED BY THE DPE. IF FAILURE OF THE DPE OCCURS, CLT WILL BE CONFIGURED TO PERFORM CONTROL BUS MONITORING LOGGING FUNCTION INSTEAD OF DPE, WITH PTC AND TLM CONCURRENCE.

RELEASED - Printed documents may be obsolete; validate prior to use.

1.7.2 LIST OF ABBREVIATIONS (NON-STANDARD)

1. ALL ABBREVIATIONS USED, UNLESS OTHERWISE LISTED, ARE CONTAINED IN SPACE TRANSPORTATION SYSTEM AND ASSOCIATED PAYLOADS: GLOSSARY, ACRONYMS, AND ABBREVIATIONS, NASA REFERENCE PUBLICATION 1052.

2. THE FOLLOWING ABBREVIATIONS AND ACRONYMS WHICH ARE NOT DEFINED IN THE NASA ACRONYM PUBLICATION, ARE ALSO USED IN THIS OMI.

ABBREVIATION	DESCRIPTION
ABC	AUDIO BUS CONTROLLER
ASSY	ASSEMBLY
ASYNC	ASYNCHRONOUS
ATU	AUDIO TERMINAL UNIT.
BATT	BATTERY
BOB	BREAKOUT BOX
BSPLT	BASEPLATE
C&C	COMMAND & CONTROL
C&DH	COMMAND AND DATA HANDLING
CE	CARGO ELEMENT
CIP	COMPUTER INTERFACE PANEL
CWA	CAUTION & WARNING ANNUNCIATION
C&W	CAUTION AND WARNING
DAS	DATA ACQUISITION SYSTEM
DDCT	DATA DISPLAY CONFIGURATION TABLE
DDCU	DC-TO-DC CONVERTER UNIT
EATCS	EXTERNAL ACTIVE THERMAL CONTROL SYSTEM
ECDL	ELECTRICAL CONNECT DISCONNECT LOG
ECU	ELECTRONIC CONTROL UNIT
EDM	ENGAGE/DRIVE MECHANISM
EEATCS	EARLY EXTERNAL AMMONIA THERMAL CONTROL SYSTEM
EF	EXPOSED FACILITY
ERCA	EXTRAVEHICULAR MOBILITY UNIT RF CAMERA ASSEMBLY
ETCS	EARLY THERMAL CONTROL SYSTEM
ETVCG	EXTERNAL TV CAMERA GROUP
EXT	EXTERNAL
FAS	FLIGHT APPLICATION SOFTWARE

RELEASED - Printed documents may be obsolete; validate prior to use.

1.7.2 LIST OF ABBREVIATIONS (NON-STANDARD) (CONTINUED)

ABBREVIATION	DESCRIPTION
FCIC	FLOW AND CONTROL INSTRUMENTATION CART
FCV	FLOW CONTROL VALVE
FDIR	FAULT DETECTION ISOLATION AND RECOVERY
FE	FLIGHT EMULATOR
GPRV	GASEOUS PRESSURE REGULATOR VALVE
GSE	GROUND SUPPORT EQUIPMENT
HAC	HEAT ACQUISITION CONTROL
HCOR	HIGH-RATE COMMUNICATION OUTAGE RECORDER
HRDL	HIGH RATE DATA LINK
HRFM	HIGH RATE FRAME MULTIPLEXER
HRMS	HIGH DATA RATE MULTIPLEXER AND SWITCHER
HX	HEAT EXCHANGER
HZ	HERTZ
ICA	INTERNAL AUDIO CONTROLLER
IFHX	INTEGRATED FLIGHT HEAT EXCHANGER
IFTK	INTERFACE TEST KIT
IMCA	INTEGRATED MOTOR CONTROLLER ASSEMBLY
INH	INHIBIT
IRIG-B	INTERRANGE INSTRUMENTATION GROUP-B
ISS	INTERNATIONAL SPACE STATION
ITCS	INTERNAL THERMAL CONTROL SYSTEM
JCP	JEM CONTROL PROCESSOR
JEM	JAPANESE EXPERIMENT MODULE
JSC	LYNDON B. JOHNSON SPACE CENTER
KPA	KILOPASCALS
LMB	LEFT MOUSE BUTTON (PCS KYBD)
LOC	LOSS OF COMMUNICATION
MATE	MDM APPLICATION TEST ENVIRONMENT
MDM	MULTIPLEXER DEMULTIPLEXER
MTL	MODERATE TEMPERATURE LOOP
NCR	NONCONFORMANCE REPORT
ORU	ORBITAL REPLACEMENT UNIT
PCR	PORTABLE COMPUTER RECEPTACLE
PCS	PORTABLE COMPUTER SYSTEM

RELEASED - Printed documents may be obsolete; validate prior to use.

1.7.2 LIST OF ABBREVIATIONS (NON-STANDARD) (CONTINUED)

ABBREVIATION	DESCRIPTION
PCVP	PUMP CONTROL VALVE PACKAGE
PDB	POWER DISTRIBUTION BOX
PDH	PAYLOAD DATA HANDLING UNIT
PDU	POWER DISTRIBUTION UNIT
PFCS	PUMP AND FLOW CONTROL SUBASSEMBLY
PIB	POWER INTERFACE BOX
PLRPC	PROGRAMMABLE LOAD REMOTE POWER CONTROLLER
PM	PUMP MODULE
PM	PRESSURIZED MODULE
PMA	PUMP MOTOR ASSEMBLY
PMCU	POWER MANAGEMENT CONTROL UNIT
PPL	PREPOSITIONED PROGRAM LOAD
PTCS	PASSIVE THERMAL CONTROL SYSTEM
PU	PRESSURIZATION UNIT
REV	REVERSE

RELEASED - Printed documents may be obsolete; validate prior to use.

1.7.2 LIST OF ABBREVIATIONS (NON-STANDARD) (CONTINUED)

ABBREVIATION	DESCRIPTION
RLT	ROBOTICS LAPTOP TERMINAL
RMB	RIGHT MOUSE BUTTON (PCS KYBD)
RPC	REMOTE POWER CONTROLLER
RPCM	REMOTE POWER CONTROL MODULE
RPDA	REMOTE POWER DISTRIBUTION ASSEMBLY
RT	REMOTE TERMINAL
RMS	REMOTE MANIPULATOR SYSTEM
RWS	ROBOTIC WORK STATION
SE	SUPPORT EQUIPMENT
SLT	SYSTEM LAPTOP TERMINAL
SPDA	SECONDARY POWER DISTRIBUTION ASSEMBLY
SOC	STATE OF CHARGE
TCMS	TEST CONTROL & MONITOR SYSTEM
TMPLT	TEMPLATE
UOP	UTILITY OUTLET PANEL
UPS	UNINTERRUPTED POWER SYSTEM
VBSP	VIDEO BASEBAND SIGNAL PROCESSOR
VDC	VOLTS DIRECT CURRENT
VDD	VERIFICATION DESCRIPTION DOCUMENT
VDS	VIDEO DISPLAY SYSTEM
VLV	VALVE
VSU	VIDEO SWITCHER UNIT
WS	WORK STATION

RELEASED - Printed documents may be obsolete; validate prior to use.

1.7.3 CALL SIGNS/WORDS

KEY
CALL SIGN OR *CALL WORD – DESCRIPTION (LOCATION)

TEST MANAGEMENT
NTD – NASA TEST DIRECTOR (CONTROL ROOM)
TIE – NASA TECHNICAL INTEGRATION ENGINEER (CONTROL ROOM)
PTC – BOEING PAYLOAD TEST CONDUCTOR (CONTROL ROOM)
YOPS – BOEING OPERATIONS ENGINEER (FOOTPRINT)

NODE 2
NPO – MSFC NODE 2 PROJECT OFFICE (MSFC)

JEM LAUNCH SITE SUPPORT TEAM
*NTC – NASDA TEST CONDUCTOR (CONTROL ROOM)
TLM – MHI TASK LEADER (FOOTPRINT)
SLT – SLT OPERATOR (INSIDE JEM)
RLT - RLT OPERATOR (INSIDE JEM)
MJ1 – JEM OPERATOR (FOOTPRINT)
NSQ – NASDA SAFETY AND QUALITY

GENERAL
MS1 – MISSION SPECIALIST/PCS OPERATOR (ANY PCS LOCATION)
SST1 – BOEING STATION TECHNICIAN (FOOTPRINT)
SNT1 – BOEING NODE TECHNICIAN (INSIDE NODE)
SJT1 – BOEING JEM TECHNICIAN (INSIDE JEM)
VITT – FLIGHT CREW REPRESENATIVE
KSAF – NASA SAFETY ENGINEER
*PLC – PAYLOAD COMMUNICATIONS
*TL - TASK LEADER

EPS
KEPS – NASA ELECTRICAL POWER SYSTEMS ENGR (CONTROL ROOM)
KEME – NASA EME SYSTEMS ENGR (CONTROL ROOM)
KEP1 – NASA ELECTRICAL POWER SUPPORT ENGR (FOOTPRINT)
SDAS – BOEING POWER DATA ACQUISITION SYST ENG (CONTROL ROOM)
SQSE – BOEING POWER QUALITY SYSTEM ENGINEER (FOOTPRINT)
DESE – BOEING SUPPORT EQUIPMENT ENGINEER (FOOTPRINT)
DET1 – BOEING SUPPORT EQUIPMENT TECHNICIAN (FOOTPRINT)

C&DH
KCDH – NASA C&DH SYSTEMS ENGR (CONTROL ROOM)
KFSW – NASA FLIGHT SOFTWARE ENGR (CONTROL ROOM)

FLUIDS
KTCS – NASA FLUID SYSTEMS LEAD ENGR (CONTROL ROOM)
KECL – NASA ECLSS ENGINEER (CONTROL ROOM)
KTCN – NASA THERMAL CONTROL NODE ENGINEER (CONTROL ROOM)
SFSG – BOEING FLUID SYSTEM GSE ENGINEER (INTERMEDIATE BAY)
KFWT – BOEING FLUID TECHNICIAN (INTERMEDIATE BAY)

RELEASED - Printed documents may be obsolete; validate prior to use.

1.7.3 CALL SIGNS/WORDS (CONTINUED)

C&T
KCTE – NASA C&T SYSTEMS ENGR (CONTROL ROOM)
KCT1 – NASA C&T ENGINEER (FOOTPRINT)
SCNT – BOEING C&T, HIGH RATE ENGINEER (C&T LAB)
STVE – BOEING VIDEO SYSTEMS ENGINEER (C&T LAB)
SCT1 – BOEING C&T TECHNICIAN (C&T LAB)
*RWS – RWS OPERATOR (FOOTPRINT/FE)

QUALITY
DKQE – NASA QUALITY ENGINEER (QM ROOM)
DKQM – NASA QUALITY ASSURANCE MONITOR (QM ROOM)
DKQN – NASA QUALITY ASSURANCE (FOOTPRINT)
DKSQ – NASA SOFTWARE QUALITY ASSURANCE
*MQE – MISSION QUALITY ENGINEER - BOEING (QM ROOM)
DCQM - BOEING QUALITY ASSURANCE MONITOR (QM ROOM)
DCQA – BOEING STATION QUALITY ASSURANCE (FOOTPRINT)

FLIGHT EMULATOR
SSFE - BOEING FLIGHT EMULATOR SYSTEMS ENGR (FOOTPRINT)
SCDH - BOEING FLIGHT EMULATOR C&DH ENGR (FOOTPRINT)
SET1 – BOEING FLIGHT EMULATOR TECHNICIAN (FOOTPRINT)

TCMS
ACME – BOEING TCMS SYSTEM ENGR (TCMS ROOM)

TCDS
STEO – BOEING TCDS SYSTEM ENGR (TCDS ROOM)

1.8 APPLICABLE TECHNICAL REQUIREMENTS

1.8.5 OMRS REQUIREMENTS

IDENTIFIED IN THE CONTROLLING DOCUMENT

RELEASED - Printed documents may be obsolete; validate prior to use.

SECTION II - PRE-OPERATION SETUP INSTRUCTIONS

SEQ/STEP	CMD	RESP	DESCRIPTION	VERIF.

NOT APPLICABLE

RELEASED - Printed documents may be obsolete; validate prior to use.

SECTION III - OPERATION SUPPORT SETUP INSTRUCTIONS

SEQ/STEP	CMD	RESP	DESCRIPTION	VERIF.

NOT APPLICABLE

RELEASED - Printed documents may be obsolete; validate prior to use.

SECTION IV - OPERATION INSTRUCTIONS

SEQ/STEP	CMD	RESP	DESCRIPTION	VERIF.

01-000 **CONNECT USOS PCS LAPTOP TO JEM UTILITY OUTLET PANEL**

NOTE

THIS SEQUENCE PERFORMS THE CONNECTION OF ONE FLIGHT IBM THINKPAD 760 SERIES LAPTOP TO ONE JEM UTILITY OUTLET PANEL (UOP). REFERENCE FIGURE 1: JEM PCS/UOP CONNECTION DIAGRAM. REFERENCE THE PCS-TO-USL UOP CONNECTION DIAGRAM AT THE END OF THIS SEQUENCE FOR A GRAPHICAL DEPICTION OF THE CABLE CONNECTIONS.

01-001 PTC DKQM RECORD THE FOLLOWING INFORMATION:

PROCEDURE/SEQ/STEP THAT CALLED THIS INSTRUCTION _____

RECORD OPTIONS _____

GMT _____:_____:_____ (DAY:HR:MIN)

NV:_____

01-002 KCDH RECORD SERIAL NUMBERS FOR THE PCS AND ASSOCIATED EQUIPMENT IN THE TABLE BELOW:

PART NO.	SERIAL NO.	NOMENCLATURE	QTY
SDG39129273-301 (BU65550M2-605)		MIL-STD-1553 PCMCIA CARD	1
SDZ39129262-303		IBM THINKPAD 760XD LAPTOP (PCS)(INCLU CD-ROM DRIVE, BATTERY PACK, 3GB HARD DRIVE)	1
SDG39129273-301		PCMCIA 1553 Y-ADAPTER CABLE	1
SEG39129263-301		20VDC POWER CABLE	1
SED39129272-303		120VDC/16VDC POWER SUPPLY	1
SEZ39129268-303		UOP 1553 DATA/120V POWER CABLE ASSEME	1
SDZ39131205-301		PCS EXTERNAL FLOPPY DISK DRIVE	1

TL:_____

RELEASED - Printed documents may be obsolete; validate prior to use.

SECTION IV - OPERATION INSTRUCTIONS

SEQ/STEP CMD RESP DESCRIPTION VERIF.

NOTE

THE UTILITY OUTLET PANELS IN THE JEM PROVIDE BOTH 120VDC POWER AND 1553 OR ETHERNET DATA CONNECTIONS (REFERENCE THE TABLE BELOW). EACH UOP IS CONNECTED TO TWO UNIQUE 1553 DATA BUSSES, SO CARE MUST BE TAKEN TO ASSURE THE PCS IS CONNECTED TO THE CORRECT UOP IN ORDER TO SUPPORT THE TEST.

JEM UOP LOCATION	**UOP DESIGNATION**	**DATA BUS (J3 CONNECTOR)**	**DATA BUS (J4 CONNECTOR)**	**POWER SOURCE**
ISPR F2 FWD FLOOR	A1_FD2	1553 LB CHECS-JEM	N/A	PDU A2 RPC 11
ISPR F4 FWD FLOOR	A2_FD4	1553 PAYLOAD BUS 3	ETHERNET (MEDIUM RATE COMM)	PDU A2 RPC 10
ISPR F6 FWD FLOOR	A3_FD6	1553 (PCS) CB-EXT-1	1553 (SLT) SYS LOCAL BUS 2	PDU A1 RPC 7
ISPR A2 AFT FLOOR	B1_AD2	1553 LB PL-JEM	1553 PAYLOAD BUS 3	PDU B2 RPC 13
ISPR A5 AFT FLOOR	B2_AD5	1553 (PCS) CB-EXT-2	1553 (SLT) SYS LOCAL BUS 2	PDU B1 RPC 7
ISPR A6 AFT FLOOR	B3_AD6	1553 LB CHECS-JEM	ETHERNET (PCS LAN)	PDU B2 RPC 12

FIG. 1 JEM PCS/UOP CONNECTION DIAGRAM

NOTE

THE WORDS "UOP LOCATION" AND "UOP CONNECTOR" IN THE REMAINDER OF THIS PROCEDURE WILL REFER TO THE DATA RECORDED IN THE FOLLOWING STEP.

01-003 KCDH JEM
RECORD
UOP LOCATION : _____

UOP CONNECTOR: _____
(LEFT(J3) OR RIGHT(J4))

TL:_____

RELEASED - Printed documents may be obsolete; validate prior to use.

SECTION IV - OPERATION INSTRUCTIONS

SEQ/STEP	CMD	RESP	DESCRIPTION	VERIF.
01-004	KCDH	SJT1	JEM VERIFY: PCS – POWERED OFF	
				T:_____

NOTE

IF THE JEM MODULE IS POWERED OFF, TAKE A 'NOT PERFORMED' ON THE FOLLOWING STEP.

01-005	KCDH	MS1	PCS JEM EPS:JEM UOPS 'JEM UOPS' VERIFY UOP LOCATION RPC SWITCH – OPEN	
				NOT PERFORMED:_____
01-006	KCDH	SJT1	JEM VERIFY UOP LOCATION RESET LIGHT – NOT ILLUMINATED	
				T:_____
01-007	KCDH TLM	TLM MJ1 NSQ DKQN	JEM REMOVE TETHERED CONNECTOR CAP FROM UOP CONNECTOR.	
				OK TO DISCONNECT TJW:_____
				OK TO DISCONNECT NW:_____
				DISCONNECT OK TJW:_____
				DISCONNECT OK NW:_____
01-008	KCDH	SJT1	JEM REMOVE TETHERED CONNECTOR CAP FROM 1553 DATA/120V POWER CABLE ASSY (PART NO. SEZ39129268-303) CONNECTOR "UOP".	
				T:_____

RELEASED - Printed documents may be obsolete; validate prior to use.

SECTION IV - OPERATION INSTRUCTIONS

SEQ/STEP	CMD	RESP	DESCRIPTION	VERIF.
01-009	KCDH TLM	TLM MJ1 NSQ DKQN	JEM CONNECT 1553 DATA/120V POWER CABLE ASSY (PART NO. SEZ39129268-303) CONNECTOR "UOP" TO UOP CONNECTOR.	
			OK TO CONNECT	TJW:_____
			OK TO CONNECT	NW:_____
			CONNECT OK	TJW:_____
			CONNECT OK	NW:_____

NOTE

IF THE PCS IS BEING TRANSFERRED FROM ANOTHER JEM UOP TAKE A ‘NOT PERFORMED’ ON THE FOLLOWING TEN STEPS.

01-010	KCDH	SJT1	JEM REMOVE TETHERED CONNECTOR CAP FROM 1553 DATA/120V POWER CABLE ASSY (PART NO. SEZ39129268-303) CONNECTOR "DC POWER".	
				T:_____
01-011	KCDH	SJT1	JEM REMOVE TETHERED CONNECTOR CAP FROM 120VDC/16VDC POWER SUPPLY (PART NO. SEG39129272-303) CONNECTOR "J1 120VDC INPUT".	
				T:_____
01-012	KCDH	SJT1 DKQN	JEM CONNECT 1553 DATA/120V POWER CABLE ASSY (PART NO. SEZ39129268-301) CONNECTOR "DC POWER" TO 120VDC/16VDC POWER SUPPLY (PART NO. SEG39129272-303) CONNECTOR "J1 120VDC INPUT".	
			OK TO CONNECT	TNW:_____
			CONNECT OK	TNW:_____
01-013	KCDH	SJT1	JEM REMOVE TETHERED CONNECTOR CAP FROM 120VDC/16VDC POWER SUPPLY (PART NO. SEG39129272-303) CONNECTOR "J2 16VDC OUTPUT".	
				T:_____

RELEASED - Printed documents may be obsolete; validate prior to use.

SECTION IV - OPERATION INSTRUCTIONS

SEQ/STEP	CMD	RESP	DESCRIPTION	VERIF.
01-014	KCDH	SJT1 DKQN	JEM CONNECT 20V POWER CABLE ASSY (PART NO. SEG39129263-301) CONNECTOR "TO POWER SUPPLY" TO 120VDC/16VDC POWER SUPPLY (PART NO. SEG39129272-303) CONNECTOR "J2 16VDC OUTPUT".	
			OK TO CONNECT	TNW:_____
			CONNECT OK	TNW:_____
01-015	KCDH	SJT1	JEM REMOVE TETHERED CONNECTOR CAP FROM IBM THINKPAD 760XD LAPTOP (PART NO. SDZ39129262-303) POWER RECEPTACLE (LOCATED NEAR THE REAR OF THE LEFT SIDE).	
				T:_____
01-016	KCDH	SJT1 DKQN	JEM CONNECT 20V POWER CABLE ASSY (PART NO. SEG39129263-301) CONNECTOR "TO COMPUTER POWER RECEPTACLE" TO IBM THINKPAD 760XD LAPTOP (PART NO. SDZ39129262-303) POWER RECEPTACLE.	
			OK TO CONNECT	TNW:_____
			CONNECT OK	TNW:_____
01-017	KCDH	SJT1 DKQN	JEM INSTALL MIL-STD-1553 PCMCIA CARD (PART NO. SDG39129273-301) INTO IBM THINKPAD 760XD LAPTOP (PART NO. SDZ39129262-303) UPPER PCMCIA CARD SLOT.	
			OK TO CONNECT	TNW:_____
			CONNECT OK	TNW:_____

RELEASED - Printed documents may be obsolete; validate prior to use.

SECTION IV - OPERATION INSTRUCTIONS

SEQ/STEP	CMD	RESP	DESCRIPTION	VERIF.

CAUTION

THE PCMCIA CONNECTION IS VERY DELICATE.

CARE MUST BE TAKEN NOT TO EXCESSIVELY BEND THE PCMCIA Y-ADAPTER CABLE CONNECTOR WHILE CONNECTING TO THE PCMCIA CARD IN THE NEXT STEP.

01-018 KCDH SJT1 JEM
DKQN CONNECT PCMCIA 1553 Y-ADAPTER CABLE (PART NO. SDG39129273-301) PCMCIA CONNECTOR TO MIL-STD-1553 PCMCIA CARD.

OK TO CONNECT TNW:_____

CONNECT OK TNW:_____

01-019 KCDH SJT1 JEM
DKQN CONNECT PCMCIA 1553 Y-ADAPTER CABLE (PART NO. SDG39129273-301) PCMCIA COAX CONNECTORS TO UOP 1553 DATA/120VDC POWER CABLE ASSY (PART NO. SEZ39129268-303) COAX CONNECTORS AS FOLLOWS:

(BLUE)Y-ADAPTER (RED)UOP CABLE
"A" TO "CHAN A"

OK TO CONNECT TNW:_____

CONNECT OK TNW:_____

"B" TO "CHAN B"

OK TO CONNECT TNW:_____

CONNECT OK TNW:_____

NOT PERFORMED:_____
(PREV. 10 STEPS)

RELEASED - Printed documents may be obsolete; validate prior to use.

SECTION IV - OPERATION INSTRUCTIONS

SEQ/STEP	CMD	RESP	DESCRIPTION	VERIF.

CONNECT VGA CABLE TO PCS

NOTE

PERFORM THE FOLLOWING TWO STEPS IF A VGA VIDEO CABLE IS TO BE CONNECTED TO THE LAPTOP TO SUPPORT GROUND TESTING. THIS DIRECT VIDEO LINE PROVIDES CLEAR VIDEO OF THE PCS DISPLAY SCREEN, WHICH CAN BE ROUTED THROUGH THE SSPF FACILITY VIDEO SYSTEM. OTHERWISE, TAKE A 'NOT PERFORMED' ON THE FOLLOWING TWO STEPS.

PERFORM THE FOLLOWING STEP IF THE LAPTOP BACK PANEL IS CLOSED.

01-020 KCDH SJT1 JEM
OPEN THE BACK PANEL OF THE LAPTOP.

T:_____

NOT PERFORMED:_____

01-021 KCDH SJT1 JEM
DKQN CONNECT VGA EXTENDER CABLE (PART NO. N/A) TO THE LAPTOP EXTERNAL MONITOR PORT (FEMALE CONNECTOR LOCATED IN THE CENTER OF THE BACK PANEL).

OK TO CONNECT TNW:_____

CONNECT OK TNW:_____

NOT PERFORMED:_____
(PREVIOUS 2 STEPS)

RELEASED - Printed documents may be obsolete; validate prior to use.

SECTION IV - OPERATION INSTRUCTIONS

SEQ/STEP	CMD	RESP	DESCRIPTION	VERIF.

EXTERNAL FLOPPY DRIVE INSTALLATION

NOTE

THE FOLLOWING STEPS PERFORM THE CONNECTION OF AN EXTERNAL FLOPPY DRIVE TO AN IBM THINKPAD 760 SERIES LAPTOP. IF IT IS NOT NECESSARY TO CONNECT THE FLOPPY DRIVE, TAKE A NOT PERFORMED ON THE FOLLOWING FIVE STEPS.

THIS SEQUENCE ASSUMES THAT THE LAPTOP IS POWERED OFF. THE FLOPPY DRIVE MAY BE CONNECTED TO THE PCS WHILE IT IS POWERED, BUT A RE-BOOT IS REQUIRED BEFORE THE SOFTWARE WILL RECOGNIZE THE ADDITION OF THE PERIPHERAL DEVICE.

01-022 KCDH

RECORD
PCS LAPTOP
PART NO: _____

SERIAL NO: _____

DISKETTE DRIVE
PART NO: _____

SERIAL NO: _____

EXTERNAL DISKETTE DRIVE CASE
PART NO: _____

SERIAL NO: _____

TL:_____

RELEASED - Printed documents may be obsolete; validate prior to use.

SECTION IV - OPERATION INSTRUCTIONS

SEQ/STEP	CMD	RESP	DESCRIPTION	VERIF.
			NOTE PERFORM THE FOLLOWING THREE STEPS IF THE DISKETTE DRIVE IS NOT ALREADY INSTALLED IN THE EXTERNAL DISKETTE DRIVE CASE.	
01-023	KCDH	SJT1	REMOVE TOP COVER OF EXTERNAL DISKETTE DRIVE CASE BY HOLDING THE BOTTOM OF THE CASE AND SLIDING THE TOP COVER TO THE REAR, THEN TILT THE FRONT UP AND OUT.	T:_____
01-024	KCDH	SJT1	INSERT THE DISKETTE DRIVE INTO THE CASE BY INSERTING THE FRONT END OF THE DRIVE INTO THE FRONT OF THE CASE, THEN PRESSING DOWN ON THE REAR OF THE DRIVE AT "PRESS HERE" UNTIL IT SNAPS INTO PLACE.	T:_____
01-025	KCDH	SJT1	REPLACE TOP COVER OF EXTERNAL DISKETTE DRIVE CASE BY PLACING THE REAR COVER KNOBS IN THE BOTTOM CASE SLOTS, PIVOTING THE COVER DOWN ONTO THE BOTTOM OF THE CASE, THEN SLIDING THE COVER FROM THE REAR TO THE FRONT, UNTIL IT SNAPS INTO PLACE.	T:_____
				NOT PERFORMED:_____ (PREV. 3 STEPS)
01-026	KCDH	SJT1 DKQN	CONNECT THE EXTERNAL DISKETTE DRIVE CONNECTOR TO THE EXTERNAL DISKETTE DRIVE RECEPTACLE, LOCATED AT THE REAR OF THE PCS LAPTOP.	OK TO CONNECT TNW:_____
				CONNECT OK TNW:_____
				NOT PERFORMED:_____ (PREV. 5 STEPS)
01-027	KCDH PTC 052	PTC DKQM	CONNECT USOS PCS LAPTOP TO JEM UTILITY OUTLET PANEL COMPLETE. GMT _____:_____:_____ (DAY:HR:MIN)	NV:_____

RELEASED - Printed documents may be obsolete; validate prior to use.

SECTION IV - OPERATION INSTRUCTIONS

SEQ/STEP	CMD	RESP	DESCRIPTION	VERIF.
02-000			**DISCONNECT USOS PCS LAPTOP FROM JEM UTILITY OUTLET PANEL**	
			NOTE THIS SEQUENCE PERFORMS THE DISCONNECTION AND REMOVAL OF ONE FLIGHT IBM THINKPAD 760 SERIES LAPTOP FROM ONE JEM UTILITY OUTLET PANEL (UOP). REFERENCE FIGURE 1: JEM PCS/UOP CONNECTION DIAGRAM.	
02-001	PTC	DKQM	RECORD THE FOLLOWING INFORMATION: PROCEDURE/SEQ/STEP THAT CALLED THIS INSTRUCTION _____ RECORD OPTIONS _____ GMT _____:_____:_____ (DAY:HR:MIN)	NV:_____

RELEASED - Printed documents may be obsolete; validate prior to use.

SECTION IV - OPERATION INSTRUCTIONS

SEQ/STEP CMD RESP DESCRIPTION VERIF.

NOTE

THE UTILITY OUTLET PANELS IN THE JEM PROVIDE BOTH 120VDC POWER AND 1553 OR ETHERNET DATA CONNECTIONS (REFERENCE THE TABLE BELOW).

JEM UOP LOCATION	**UOP DESIGNATION**	**DATA BUS (J3 CONNECTOR)**	**DATA BUS (J4 CONNECTOR)**	**POWER SOURCE**
ISPR F2 FWD FLOOR	A1_FD2	1553 LB CHECS-JEM	N/A	PDU A2 RPC 11
ISPR F4 FWD FLOOR	A2_FD4	1553 PAYLOAD BUS 3	ETHERNET (MEDIUM RATE COMM)	PDU A2 RPC 10
ISPR F6 FWD FLOOR	A3_FD6	1553 (PCS) CB-EXT-1	1553 (SLT) SYS LOCAL BUS 2	PDU A1 RPC 7
ISPR A2 AFT FLOOR	B1_AD2	1553 LB PL-JEM	1553 PAYLOAD BUS 3	PDU B2 RPC 13
ISPR A5 AFT FLOOR	B2_AD5	1553 (PCS) CB-EXT-2	1553 (SLT) SYS LOCAL BUS 2	PDU B1 RPC 7
ISPR A6 AFT FLOOR	B3_AD6	1553 LB CHECS-JEM	ETHERNET (PCS LAN)	PDU B2 RPC 12

FIG. 1 JEM PCS/UOP CONNECTION DIAGRAM

NOTE

THE WORDS "UOP LOCATION" AND "UOP CONNECTOR" IN THE REMAINDER OF THIS PROCEDURE WILL REFER TO THE DATA RECORDED IN THE FOLLOWING STEP.

02-002 KCDH JEM
RECORD
UOP LOCATION : _____

UOP CONNECTOR: _____
(LEFT(J3) OR RIGHT(J4))

TL:_____

02-003 KCDH SJT1 JEM
VERIFY:
PCS CONNECTED AT UOP LOCATION – POWERED OFF

T:_____

RELEASED - Printed documents may be obsolete; validate prior to use.

SECTION IV - OPERATION INSTRUCTIONS

SEQ/STEP	CMD	RESP	DESCRIPTION	VERIF.

NOTE

IF THE JEM MODULE IS POWERED OFF, TAKE A 'NOT PERFORMED' ON THE FOLLOWING STEP.

02-004 KCDH MS1 PCS
JEM EPS:JEM UOPS

'JEM UOPS'
VERIFY
UOP LOCATION RPC SWITCH – OPEN

NOT PERFORMED:_____

02-005 KCDH SJT1 JEM
VERIFY
UOP LOCATION RESET LIGHT – NOT ILLUMINATED

T:_____

DISCONNECT VGA CABLE FROM PCS

NOTE

PERFORM THE FOLLOWING STEP IF A VGA VIDEO CABLE IS CONNECTED TO THE LAPTOP TO SUPPORT GROUND TESTING AND IT IS NO LONGER REQUIRED.

02-006 KCDH SJT1 JEM
DKQN DISCONNECT VGA EXTENDER CABLE (PART NO. N/A) FROM THE LAPTOP EXTERNAL MONITOR PORT (FEMALE CONNECTOR LOCATED IN THE CENTER OF THE BACK PANEL).

OK TO DISCONNECT TNW:_____

DISCONNECT OK TNW:_____

NOT PERFORMED:_____

RELEASED - Printed documents may be obsolete; validate prior to use.

SECTION IV - OPERATION INSTRUCTIONS

SEQ/STEP	CMD	RESP	DESCRIPTION	VERIF.
			DISCONNECT PCS FROM UOP	
02-007	KCDH TLM	TLM MJ1 NSQ DKQN	JEM DISCONNECT 1553 DATA/120V POWER CABLE ASSY (PART NO. SEZ39129268-303) CONNECTOR "UOP" FROM UOP CONNECTOR.	
			OK TO DISCONNECT	TJW:_____
			OK TO DISCONNECT	NW:_____
			DISCONNECT OK	TJW:_____
			DISCONNECT OK	NW:_____
02-008	KCDH TLM	TLM MJ1 NSQ DKQN	JEM CONNECT TETHERED CONNECTOR CAP ONTO UOP CONNECTOR.	
			OK TO CONNECT	TJW:_____
			OK TO CONNECT	NW:_____
			CONNECT OK	TJW:_____
			CONNECT OK	NW:_____
02-009	KCDH	SJT1	JEM REPLACE TETHERED CONNECTOR CAP ONTO 1553 DATA/120V POWER CABLE ASSY (PART NO. SEZ39129268-303) CONNECTOR "UOP".	
				T:_____

RELEASED - Printed documents may be obsolete; validate prior to use.

SECTION IV - OPERATION INSTRUCTIONS

SEQ/STEP	CMD	RESP	DESCRIPTION	VERIF.

NOTE

IF THE PCS IS BEING MOVED TO A DIFFERENT JEM UOP TAKE A 'NOT PERFORMED' ON THE FOLLOWING ELEVEN STEPS.

02-010 KCDH SJT1 JEM
DKQN DISCONNECT PCMCIA 1553 Y-ADAPTER CABLE (PART NO. SDG39129273-301) PCMCIA COAX CONNECTORS FROM UOP 1553 DATA/120VDC POWER CABLE ASSY (PART NO. SEZ39129268-303) COAX CONNECTORS AS FOLLOWS:

(BLUE)Y-ADAPTER (RED)UOP CABLE
"A" FROM "CHAN A"

OK TO DISCONNECT TNW:_____

DISCONNECT OK TNW:_____

"B" FROM "CHAN B"

OK TO DISCONNECT TNW:_____

DISCONNECT OK TNW:_____

RELEASED - Printed documents may be obsolete; validate prior to use.

SECTION IV - OPERATION INSTRUCTIONS

SEQ/STEP	CMD	RESP	DESCRIPTION	VERIF.

CAUTION

THE PCMCIA CONNECTION IS VERY DELICATE.

CARE MUST BE TAKEN NOT TO EXCESSIVELY BEND THE PCMCIA Y-ADAPTER CABLE CONNECTOR WHILE DISCONNECTING FROM THE PCMCIA CARD IN THE NEXT STEP.

02-011 KCDH SJT1 JEM
DKQN DISCONNECT PCMCIA 1553 Y-ADAPTER CABLE (PART NO. SDG39129273-301) PCMCIA CONNECTOR FROM MIL-STD-1553 PCMCIA CARD.

OK TO DISCONNECT TNW:_____

DISCONNECT OK TNW:_____

02-012 KCDH SJT1 JEM
DKQN REMOVE MIL-STD-1553 PCMCIA CARD (PART NO. SDG39129273-301) FROM IBM THINKPAD 760XD LAPTOP (PART NO. SDZ39129262-303) UPPER PCMCIA CARD SLOT.

OK TO DISCONNECT TNW:_____

DISCONNECT OK TNW:_____

02-013 KCDH SJT1 JEM
DKQN DISCONNECT 20V POWER CABLE ASSY (PART NO. SEG39129263-301) CONNECTOR "TO COMPUTER POWER RECEPTACLE" FROM IBM THINKPAD 760XD LAPTOP (PART NO. SDZ39129262-303) POWER RECEPTACLE.

OK TO DISCONNECT TNW:_____

DISCONNECT OK TNW:_____

02-014 KCDH SJT1 JEM
REPLACE TETHERED CONNECTOR CAP ONTO IBM THINKPAD 760XD LAPTOP (PART NO. SDZ39129262-303) POWER RECEPTACLE.

T:_____

RELEASED - Printed documents may be obsolete; validate prior to use.

SECTION IV - OPERATION INSTRUCTIONS

SEQ/STEP	CMD	RESP	DESCRIPTION	VERIF.
02-015	KCDH	SJT1	JEM	
		DKQN	DISCONNECT 20V POWER CABLE ASSY (PART NO. SEG39129263-301) CONNECTOR "TO POWER SUPPLY" FROM 120VDC/16VDC POWER SUPPLY (PART NO. SEG39129272-303) CONNECTOR "J2 16VDC OUTPUT".	
			OK TO DISCONNECT	TNW:_____
			DISCONNECT OK	TNW:_____
02-016	KCDH	SJT1	JEM	
			REPLACE TETHERED CONNECTOR CAP ONTO 120VDC/16VDC POWER SUPPLY (PART NO. SEG39129272-303) CONNECTOR "J2 16VDC OUTPUT".	
				T:_____
02-017	KCDH	SJT1	JEM	
		DKQN	DISCONNECT 1553 DATA/120V POWER CABLE ASSY (PART NO. SEZ39129268-301) CONNECTOR "DC POWER" FROM 120VDC/16VDC POWER SUPPLY (PART NO. SEG39129272-303) CONNECTOR "J1 120VDC INPUT".	
			OK TO DISCONNECT	TNW:_____
			DISCONNECT OK	TNW:_____
02-018	KCDH	SJT1	JEM	
			REPLACE TETHERED CONNECTOR CAP ONTO 1553 DATA/120V POWER CABLE ASSY (PART NO. SEZ39129268-303) CONNECTOR "DC POWER".	
				T:_____
02-019	KCDH	SJT1	JEM	
			REPLACE TETHERED CONNECTOR CAP ONTO 120VDC/16VDC POWER SUPPLY (PART NO. SED39129272-303) CONNECTOR "J1 120VDC INPUT".	
				T:_____

RELEASED - Printed documents may be obsolete; validate prior to use.

SECTION IV - OPERATION INSTRUCTIONS

SEQ/STEP	CMD	RESP	DESCRIPTION	VERIF.
02-020	KCDH		RECORD SERIAL NUMBERS FOR THE PCS AND ASSOCIATED EQUIPMENT IN THE TABLE BELOW:	

PART NO.	SERIAL NO.	NOMENCLATURE	QTY
SDG39129273-301 (BU65550M2-605)		MIL-STD-1553 PCMCIA CARD	1
SDZ39129262-303		IBM THINKPAD 760XD LAPTOP (PCS)(INCLU CD-ROM DRIVE, BATTERY PACK, 3GB HARD DRIVE)	1
SDG39129273-301		PCMCIA 1553 Y-ADAPTER CABLE	1
SEG39129263-301		20VDC POWER CABLE	1
SED39129272-303		120VDC/16VDC POWER SUPPLY	1
SEZ39129268-303		UOP 1553 DATA/120V POWER CABLE ASSEME	1
SDZ39131205-301		PCS EXTERNAL FLOPPY DISK DRIVE	1

TL:_____

NOT PERFORMED:_____
(PREV. 11 STEPS)

RELEASED - Printed documents may be obsolete; validate prior to use.

SECTION IV - OPERATION INSTRUCTIONS

SEQ/STEP	CMD	RESP	DESCRIPTION	VERIF.

REMOVE EXTERNAL FLOPPY DRIVE FROM PCS LAPTOP

NOTE

THE FOLLOWING STEPS PERFORM THE DISCONNECTION OF AN EXTERNAL FLOPPY DRIVE FROM AN IBM THINKPAD 760 SERIES LAPTOP. THIS SEQUENCE ASSUMES THAT THE LAPTOP IS POWERED OFF. IT IS NOT RECOMMENDED TO DISCONNECT THE EXTERNAL FLOPPY DRIVE WHILE THE LAPTOP IS RUNNING. IF IT IS NOT NECESSARY TO DISCONNECT THE FLOPPY DRIVE, TAKE A NOT PERFORMED ON THE FOLLOWING FIVE STEPS.

02-021 KCDH

RECORD
PCS LAPTOP
PART NO: _____

SERIAL NO: _____

DISKETTE DRIVE
PART NO: _____

SERIAL NO: _____

EXTERNAL DISKETTE DRIVE CASE
PART NO: _____

SERIAL NO: _____

TL:_____

RELEASED - Printed documents may be obsolete; validate prior to use.

SECTION IV - OPERATION INSTRUCTIONS

SEQ/STEP	CMD	RESP	DESCRIPTION	VERIF.
02-022	KCDH	SJT1 DKQN	DISCONNECT THE EXTERNAL DISKETTE DRIVE CONNECTOR FROM THE EXTERNAL DISKETTE DRIVE CONNECTOR AT THE REAR OF THE PCS LAPTOP.	
			OK TO DISCONNECT	TNW:_____
			DISCONNECT OK	TNW:_____
			NOTE PERFORM THE FOLLOWING THREE STEPS IF THE DISKETTE DRIVE IS TO BE REMOVED FROM THE EXTERNAL DISKETTE DRIVE CASE.	
02-023	KCDH	SJT1	REMOVE TOP COVER OF EXTERNAL DISKETTE DRIVE CASE BY HOLDING THE BOTTOM OF THE CASE AND SLIDING THE TOP COVER TO THE REAR, THEN TILT THE FRONT UP AND OUT.	T:_____
02-024	KCDH	SJT1	REMOVE THE DISKETTE DRIVE INTO THE CASE BY HOLDING THE TWO BLUE TABS AT THE REAR HANDLE AND CAREFULLY PULLING STRAIGHT UP AND OUT.	T:_____
02-025	KCDH	SJT1	REPLACE TOP COVER OF EXTERNAL DISKETTE DRIVE CASE BY PLACING THE REAR COVER KNOBS IN THE BOTTOM CASE SLOTS, PIVOTING THE COVER DOWN ONTO THE BOTTOM OF THE CASE, THEN SLIDING THE COVER FROM THE REAR TO THE FRONT, UNTIL IT SNAPS INTO PLACE.	T:_____
				NOT PERFORMED:_____ (PREV. 3 STEPS)
				NOT PERFORMED:_____ (PREV. 5 STEPS)
02-026	KCDH PTC 052	PTC DKQM	DISCONNECT USOS PCS LAPTOP FROM JEM UTILITY OUTLET PANEL COMPLETE. GMT _____:_____:_____ (DAY:HR:MIN)	NV:_____

RELEASED - Printed documents may be obsolete; validate prior to use.

SECTION IV - OPERATION INSTRUCTIONS

SEQ/STEP	CMD	RESP	DESCRIPTION	VERIF.
03-000			**JEM UOP PANEL ACTIVATION**	
03-001	PTC	DKQM	RECORD THE FOLLOWING INFORMATION: RECORD OPTIONS:_____ PROCEDURE/SEQ/STEP THAT CALLED THIS INSTRUCTION _____ GMT _____:_____:_____ (DAY:HR:MIN)	
				NV:_____
			NOTE MULTIPLE OPTIONS MAY BE REQUIRED TO SUPPORT TEST CONFIGURATIONS. CALLING PROCEDURE WILL DETERMINE WHICH OPTIONS WILL BE PREFORMED.	
			OPTION A JEM UOP_B2_AD5 ACTIVATION (PRE-JCP ACTIVATION).	
03-002	KEPS TLM	TLM MJ1	VERIFY ALL EXPECTED DEVICES ARE CONNECTED TO JEM UOP_B2_AD5.	
				T:_____
03-003	KEPS	SSFE	CES MATE: LOAD AND RUN MEIT SCRIPT MEIT3_MATE_ACT_CMDS INDEX 0X0031 CMD: JPM_EPS_PDU_B1_RPC07_(UOP_B2_AD5)_CL_(ACT) PUI: LAPX96IM0475K GMT _____:_____:_____ (HR:MIN:SEC)	

RELEASED - Printed documents may be obsolete; validate prior to use.

SECTION IV - OPERATION INSTRUCTIONS

SEQ/STEP	CMD	RESP	DESCRIPTION	VERIF.
03-004	KEPS		TCMS (DMON) VERIFY: PDU B1 RPC7 – CL ENG: SYS_PDU_B RPC7 POWER STATUS [ACT] PUI: JMDC04FCPI0PJ	
03-005	KEPS TLM	TLM MJ1	UOP B2_AD5 VERIFY: “RESET” ILLUMINATED (WHITE)	
				T:_____
			NOTE PERFORM THE FOLLOWING STEP IF OUTPUT POWER IS REQUIRED FOR TEST.	
03-006	KEPS TLM	TLM MJ1	UOP_B2_AD5 1. PRESS “POWER OUT “ BUTTON 2. VERIFY: “FAULT/TEST” ILLUMINATED (GREEN) 3. VERIFY: “ENABLE” ILLUMINATED (GREEN)	
				T:_____
				NOT PERFORMED:_____
			OPTION B JEM UOP_B2_AD5 ACTIVATION (POST JCP ACTIVATION)	
03-007	KEPS	SSFE	CES MATE: LOAD AND RUN MATE SCRIPT MEIT3_MATE_CMDS INDEX 0X00A6 CMD: JPM_EPS_PDU_B1_RPC07_(UOP_B2_AD5)_CL PUI: JSPX96IM0768K GMT _____:_____:_____ (HR:MIN:SEC)	
03-008	KEPS		TCMS PDU B1:JPM EPS PDU B1 VERIFY: PDU B1 RPC7 PWR STATUS – CL ENG: SYS_PDU_B RPC7 PWR STAT PUI: JSDC00FCPI0P	

RELEASED - Printed documents may be obsolete; validate prior to use.

SECTION IV - OPERATION INSTRUCTIONS

SEQ/STEP	CMD	RESP	DESCRIPTION	VERIF.
03-009	KEPS TLM	TLM MJ1	UOP B2_AD5 VERIFY: “RESET” ILLUMINATED (WHITE)	
				T:_____

NOTE

PERFORM THE FOLLOWING STEP IF OUTPUT POWER IS REQUIRED FOR TEST.

03-010	KEPS TLM	TLM MJ1	UOP_B2_AD5 1. PRESS “POWER OUT “ BUTTON 2. VERIFY: “FAULT/TEST” ILLUMINATED (GREEN) 3. VERIFY: “ENABLE” ILLUMINATED (GREEN)	
				T:_____
				NOT PERFORMED:_____

OPTION C UOP_A3_FD6 ACTIVATION (PRE_JCP ACTIVATION)

03-011	KEPS TLM	TLM MJ1	VERIFY ALL EXPECTED DEVICES ARE CONNECTED TO JEM UOP_A3_FD6	
				T:_____
03-012	KEPS	SSFE	CES MATE: LOAD AND RUN MEIT SCRIPT MEIT3_MATE_ACT_CMDS INDEX 0X002B CMD: JPM_EPS_PDU_A1_RPC07_(UOP_A3_FD6)_CL_(ACT) PUI: LAPX96IM0391K GMT _____:_____:_____ (HR:MIN:SEC)	
03-013	KEPS		TCMS DMON VERIFY: PDU A1 RPC7 – CL ENG: SYS_PDU_A RPC7 POWER STATUS [ACT] PUI: JMDC03FCPH0MJ	

RELEASED - Printed documents may be obsolete; validate prior to use.

SECTION IV - OPERATION INSTRUCTIONS

SEQ/STEP	CMD	RESP	DESCRIPTION	VERIF.
03-014	KEPS TLM	TLM MJ1	UOP_A3_FD6 VERIFY “RESET” ILLUMINATED (WHITE)	
				T:_____

NOTE

PERFORM THE FOLLOWING STEP IF OUTPUT POWER IS REQUIRED FOR TEST.

03-015	KEPS TLM	TLM MJ1	UOP_A3_FD6 1. PRESS “POWER OUT “ BUTTON 2. VERIFY: “FAULT/TEST” ILLUMINATED (GREEN) 3. VERIFY: “ENABLE” ILLUMINATED (GREEN)	
				T:_____
				NOT PERFORMED:_____

OPTION D UOP_A3_FD6 ACTIVATION (POST JCP-A ACTIVATION)

03-016	KEPS	SSFE	CES MATE: LOAD AND RUN MATE SCRIPT MEIT3_MATE_CMDS INDEX 0X009D CMD: JPM_EPS_PDU_A1_RPC07_(UOP_A3_FD6)_CL PUI: JSPX96IM0744K GMT _____:_____:_____ (HR:MIN:SEC)	
03-017	KEPS		TCMS PDU A1:JPM EPS PDU A1 VERIFY: PDU A1 RPC7 PWR STATUS – CL ENG: SYS_PDU_A RPC7 PWR STAT PUI: JSDC00FCPH0MJ	
03-018	KEPS TLM	TLM MJ1	UOP_A3_FD6 VERIFY “RESET” ILLUMINATED (WHITE)	
				T:_____

RELEASED - Printed documents may be obsolete; validate prior to use.

SECTION IV - OPERATION INSTRUCTIONS

SEQ/STEP	CMD	RESP	DESCRIPTION	VERIF.
			NOTE	
			PERFORM THE FOLLOWING STEP IF OUTPUT POWER IS REQUIRED FOR TEST.	
03-019	KEPS TLM	TLM MJ1	UOP_A3_FD6 1. PRESS "POWER OUT " BUTTON 2. VERIFY: "FAULT/TEST" ILLUMINATED (GREEN) 3. VERIFY: "ENABLE" ILLUMINATED (GREEN)	T:_____
				NOT PERFORMED:_____
			OPTION E UOP_B3_AD6 ACTIVATION	
03-020	KEPS TLM	TLM MJ1	VERIFY ALL EXPECTED DEVICES ARE CONNECTED TO JEM UOP_B3_AD6	T:_____
03-021	KEPS	SSFE	CES MATE LOAD AND RUN MATE SCRIPT MEIT3_MATE_CMDS INDEX 0X0099 CMD: JPM_EPS_PDU_B2_RPC12_(UOP_B3_AD6)_CL PUI: JSPX96IM0722K GMT _____:_____:_____ (HR:MIN:SEC)	
03-022	KEPS		TCMS PDU B2:JPM EPS PDU B2 VERIFY: PDU B2 RPC12 PWR STATUS – CL ENG: PL_PDU_B RPC12 POWER STATUS PUI: JSDC00FCPG0RJ	
03-023	KEPS TLM	TLM MJ1	UOP_B3_AD6 VERIFY "RESET" ILLUMINITED WHITE	T:_____

RELEASED - Printed documents may be obsolete; validate prior to use.

SECTION IV - OPERATION INSTRUCTIONS

SEQ/STEP	CMD	RESP	DESCRIPTION	VERIF.
			NOTE	
			PERFORM THE FOLLOWING STEP IF OUTPUT POWER IS REQUIRED FOR TEST.	
03-024	KEPS TLM	TLM MJ1	UOP_B3_AD6 1. PRESS "POWER OUT " BUTTON 2. VERIFY: "FAULT/TEST" ILLUMINATED (GREEN) 3. VERIFY: "ENABLE" ILLUMINATED (GREEN)	T:_____
				NOT PERFORMED:_____
			OPTION F UOP_A1_FD2 ACTIVATION	
03-025	KEPS TLM	TLM MJ1	VERIFY ALL EXPECTED DEVICES ARE CONNECTED TO JEM UOP_A1_FD2	T:_____
03-026	KEPS	SSFE	CES MATE: LOAD AND RUN MATE SCRIPT MEIT3_MATE_CMDS INDEX 0X0096 CMD: JPM_EPS_PDU_A2_RPC11_(UOP_A1_FD2)_CL PUI: JSPX96IM0693K GMT _____:_____:_____ (HR:MIN:SEC)	
03-027	KEPS		TCMS PDU A2:JPM EPS PDU A2 VERIFY: PDU A2 RPC11 PWR STATUS – CL ENG: PL_PDU_A RPC11 POWER STATUS - PUI: JSDC00FCPF0QJ	
03-028	KEPS TLM	TLM MJ1	UOP_A1_FD2 VERIFY: "RESET" ILLUMINATED (WHITE)	T:_____

RELEASED - Printed documents may be obsolete; validate prior to use.

SECTION IV - OPERATION INSTRUCTIONS

SEQ/STEP	CMD	RESP	DESCRIPTION	VERIF.
			NOTE PERFORM THE FOLLOWING STEP IF OUTPUT POWER IS REQUIRED FOR TEST.	
03-029	KEPS TLM	TLM MJ1	UOP_A1_FD2 1. PRESS “POWER OUT “ BUTTON 2. VERIFY: “FAULT/TEST” ILLUMINATED (GREEN) 3. VERIFY: “ENABLE” ILLUMINATED (GREEN)	
				T:_____
				NOT PERFORMED:_____
			OPTION G UOP_B1_AD2 ACTIVATION	
03-030	KEPS		VERIFY ALL EXPECTED DEVICES ARE CONNECTED TO JEM UOP_B1_AD2	
03-031	KEPS	SSFE	CES MATE: LOAD AND RUN MATE SCRIPT MEIT3_MATE_CMDS INDEX 0X009A CMD: JPM_EPS_PDU_B2_RPC13_(UOP_B1_AD2)_CL PUI: JSPX96IM0723K GMT _____:_____:_____ (HR:MIN:SEC)	
03-032	KEPS		TCMS PDU B2:JPM EPS PDU B2 VERIFY: PDU B2 RPC13 PWR STATUS - CL ENG: PL_PDU_B RPC13 POWER STATUS PUI: JSDC00FCPG0SJ	
03-033	KEPS TLM	TLM MJ1	UOP_B1_AD2 VERIFY: “RESET” ILLUMINATED (WHITE)	
				T:_____

RELEASED - Printed documents may be obsolete; validate prior to use.

SECTION IV - OPERATION INSTRUCTIONS

SEQ/STEP	CMD	RESP	DESCRIPTION	VERIF.
			NOTE PERFORM THE FOLLOWING STEP IF OUTPUT POWER IS REQUIRED FOR TEST.	
03-034	KEPS TLM	TLM MJ1	UOP_B1_AD2 1. PRESS "POWER OUT " BUTTON 2. VERIFY: "FAULT/TEST" ILLUMINATED (GREEN) 3. VERIFY: "ENABLE" ILLUMINATED (GREEN)	T:_____
				NOT PERFORMED:_____
			OPTION H UOP_A2_FD4 ACTIVATION	
03-035	KEPS TLM	TLM MJ1	VERIFY ALL EXPECTED DEVICES ARE CONNECTED TO UOP_A2_FD4.	T:_____
03-036	KEPS	SSFE	CES MATE LOAD AND RUN MATE SCRIPT MEIT3_MATE_CMDS INDEX: 0X0095 CMD: JPM_EPS_PDU_A2_RPC10_(UOP_A2_FD4)_CL PUI: JSPX96IM0692K GMT _____:_____:_____ (HR:MIN:SEC)	
03-037	KEPS		TCMS PDU A2:JPM EPS PDU A2 VERIFY: PDU A2 RPC10 PWR STATUS - CL ENG: PL_PDU_A RPC10 POWER STATUS PUI: JSDC00FCPF0PJ	
03-038	KEPS TLM	TLM MJ1	UOP_A2_FD4 VERIFY: "RESET" ILLUMINATED (WHITE)	T:_____

RELEASED - Printed documents may be obsolete; validate prior to use.

SECTION IV - OPERATION INSTRUCTIONS

SEQ/STEP	CMD	RESP	DESCRIPTION	VERIF.
			NOTE PERFORM THE FOLLOWING STEP IF OUTPUT POWER IS REQUIRED FOR TEST.	
03-039	KEPS TLM	TLM MJ1	UOP_A2_FD4 1. PRESS "POWER OUT " BUTTON 2. VERIFY: "FAULT/TEST" ILLUMINATED (GREEN) 3. VERIFY: "ENABLE" ILLUMINATED (GREEN)	T:_____ NOT PERFORMED:_____
03-040	KEPS PTC 052	PTC DKQM	JEM UOP ACTIVATION COMPLETE. GMT _____:_____:_____ (DAY:HR:MIN)	NV:_____

RELEASED - Printed documents may be obsolete; validate prior to use.

SECTION IV - OPERATION INSTRUCTIONS

SEQ/STEP	CMD	RESP	DESCRIPTION	VERIF.
04-000			**JEM UOP PANEL DEACTIVATION**	
04-001	PTC	DKQM	RECORD THE FOLLOWING INFORMATION: PROCEDURE/SEQ/STEP THAT CALLED THIS INSTRUCTION _____ RECORD OPTIONS _____ GMT _____:_____:_____ (DAY:HR:MIN)	NV:_____
			NOTE MULTIPLE OPTIONS MAY BE REQUIRED TO SUPPORT TEST CONFIGURATIONS. CALLING PROCEDURE WILL DETERMINE WHICH OPTIONS WILL BE PERFORMED.	
			NOTE DUE TO THE UNIQUE CONFIGURATION OF JEM, UOP PANEL DEACTIVATION OPTIONS E, F, G, AND H MUST BE DEACTIVATED PRIOR TO JCP - PRIMARY DEACTIVATION.	
			OPTION A UOP_B2_AD5 DEACTIVATION (POST PRIMARY JCP DEACTIVATION)	
04-002	KEPS TLM	TLM MJ1	VERIFY ALL DEVICES CONNECTED TO UOP-B2_AD5 ARE DEACTIVATED.	T:_____

RELEASED - Printed documents may be obsolete; validate prior to use.

SECTION IV - OPERATION INSTRUCTIONS

SEQ/STEP	CMD	RESP	DESCRIPTION	VERIF.
			NOTE PEFORM THE FOLLOWING STEP IF THE FAULT/TEST LIGHT IS ILLUMINATED ON UOP_B2_AD5	
04-003	KEPS TLM	TLM MJ1	UOP_B2_AD5 1. PRESS “POWER OUT” BUTTON 2. VERIFY: ”FAULT/TEST” NO LONGER ILLUMINATED. 3. VERIFY: “ENABLE” NO LONGER ILLUMINATED (GREEN)	T:_____ NOT PERFORMED:_____
04-004	KEPS	SSFE	CES MATE LOAD AND RUN MATE SCRIPTS MEIT3_MATE_ACT_CMDS INDEX 0X0031 CMD: JPM_JPM_EPS_PDU_B1_RPC07_(UOP_B2_AD5)_OP_(ACT) PUI: LAPX96IM0475K GMT _____:_____:_____ (HR:MIN:SEC)	
04-005	KEPS		TCMS (DMON) VERIFY: PDU B1 RPC7 POSN - OP ENG: SYS_PDU_B RPC7 POWER STATUS [ACT] PUI: JMDC04FCPI0PJ **OPTION B UOP_B2_AD5 DEACTIVATION (PRE PRIMARY JCP DEACTIVATION)**	
04-006	KEPS TLM	TLM MJ1	VERIFY ALL DEVICES CONNECTED TO UOP-B2_AD5 ARE DEACTIVATED.	T:_____

RELEASED - Printed documents may be obsolete; validate prior to use.

SECTION IV - OPERATION INSTRUCTIONS

SEQ/STEP	CMD	RESP	DESCRIPTION	VERIF.
			NOTE PEFORM THE FOLLOWING STEP IF THE FAULT/TEST LIGHT IS ILLUMINATED ON UOP_B2_AD5	
04-007	KEPS TLM	TLM MJ1	UOP_B2_AD5 1. PRESS “POWER OUT” BUTTON 2. VERIFY:”FAULT/TEST” NO LONGER ILLUMINATED. 3. VERIFY: “ENABLE” NO LONGER ILLUMINATED (GREEN)	T:_____ NOT PERFORMED:_____
04-008	KEPS	SSFE	CES MATE: LOAD AND RUN MATE SCRIPT MEIT3_MATE_CMDS INDEX: 0X00AA CMD: JPM_EPS_PDU_B1_RPC07_(UOP_B2_AD5)_OP PUI: JSPX96IM0778K GMT _____:_____:_____ (HR:MIN:SEC)	
04-009	KEPS		TCMS PDU B1:JPM EPS PDU B1 VERIFY: –PDU B1 RPC7 PWR STATUS - OP ENG: SYS_PDU_B RPC7 POWER STATUS PUI: JSDC00FCPI0PJ **OPTION C UOP_A3_FD6 DEACTIVATION (POST JCP DEACTIVATION)**	
04-010	KEPS		VERIFY ALL DEVICES CONNECTED TO JEM UOP_A3_FD6 ARE DEACTIVATED	

RELEASED - Printed documents may be obsolete; validate prior to use.

SECTION IV - OPERATION INSTRUCTIONS

SEQ/STEP	CMD	RESP	DESCRIPTION	VERIF.
			NOTE PEFORM THE FOLLOWING STEP IF THE FAULT/TEST LIGHT IS ILLUMINATED ON UOP_A3_FD6	
04-011	KEPS TLM	TLM MJ1	UOP_A3_FD6 1. PRESS “POWER OUT” BUTTON 2. VERIFY: ”FAULT/TEST” NO LONGER ILLUMINATED. 3. VERIFY: “ENABLE” NO LONGER ILLUMINATED (GREEN)	T:_____ NOT PERFORMED:_____
04-012	KEPS	SSFE	CES MATE LOAD AND RUN MATE SCRIPTS MEIT3_MATE_ACT_CMDS INDEX 0X002A CMD: JPM_EPS_PDU_A1_RPC07_(UOP_A3_FD6)_OP_(ACT) PUI: LAPX96IM0382K GMT _____:_____:_____ (HR:MIN:SEC)	
04-013	KEPS		TCMS (DMON) VERIFY: PDU A1 RPC7 POSN - OP ENG: SYS_PDU_A RPC7 POWER STATUS [ACT] PUI: JMDC03FCPHOMJ **OPTION D UOP_A3_FD6 DEACTIVATION (PRE JCP PRIMARY DEACTIVATION)**	
04-014	KEPS		VERIFY ALL DEVICES CONNECTED TO JEM UOP_A3_FD6 ARE DEACTIVATED	

RELEASED - Printed documents may be obsolete; validate prior to use.

SECTION IV - OPERATION INSTRUCTIONS

SEQ/STEP	CMD	RESP	DESCRIPTION	VERIF.
			NOTE PEFORM THE FOLLOWING STEP IF THE FAULT/TEST LIGHT IS ILLUMINATED ON UOP_A3_FD6	
04-015	KEPS TLM	TLM MJ1	UOP_A3_FD6 1. PRESS “POWER OUT” BUTTON 2. VERIFY: ”FAULT/TEST” NO LONGER ILLUMINATED. 3. VERIFY: “ENABLE” NO LONGER ILLUMINATED (GREEN)	T:_____ NOT PERFORMED:_____
04-016	KCDH	SSFE	CES MATE: LOAD AND RUN MATE SCRIPT MEIT3_MATE_CMDS INDEX: 0X00A0 CMD: JPM_EPS_PDU_A1_RPC07_(UOP_A3_FD6)_OP PUI: JSPX96IM0754K GMT _____:_____:_____ (HR:MIN:SEC)	
04-017	KEPS		TCMS PDU:JEM EPS PDU A1 VERIFY: PDU A1 RPC7 POSN - OP ENG: SYS_PDU_A RPC7 POWER STATUS PUI: JSDC00FCPH0MJ **OPTION E UOP_B3_AD6 DEACTIVATION**	
04-018	KEPS TLM	TLM MJ1	VERIFY ALL EXPECTED DEVICES CONNECTED TO JEM **UOP_B3_AD6** ARE DEACTIVATED	

RELEASED - Printed documents may be obsolete; validate prior to use.

SECTION IV - OPERATION INSTRUCTIONS

SEQ/STEP	CMD	RESP	DESCRIPTION	VERIF.
			NOTE PEFORM THE FOLLOWING STEP IF THE FAULT/TEST LIGHT IS ILLUMINATED ON UOP_B3_AD6	
04-019	KEPS TLM	TLM MJ1	UOP_B3_AD6 1. PRESS “POWER OUT” BUTTON 2. VERIFY: ”FAULT/TEST” NO LONGER ILLUMINATED. 3. VERIFY: “ENABLE” NO LONGER ILLUMINATED (GREEN)	T:_____
				NOT PERFORMED:_____
04-020	KEPS	SSFE	CES MATE: LOAD AND RUN MATE SCRIPT MEIT3_MATE_CMDS INDEX 0X009B CMD: JPM_EPS_PDU_B2_RPC12_(UOP_B3_AD6)_OP PUI: JSPX96IM0735K GMT _____:_____:_____ (HR:MIN:SEC)	
04-021	KEPS		TCMS: PDU B2:JPM EPS PDU B2 VERIFY: PDU B2 RPC12 PWR STATUS - OP ENG: PL_PDU_B RPC12 POWER STATUS PUI: JSDC00FCPG0RJ **OPTION F UOP_A1_FD2 DEACTIVATION**	
04-022	KEPS TLM	TLM MJ1	VERIFY ALL EXPECTED DEVICES CONNECTED TO JEM UOP_A1_FD2 ARE DEACTIVATED	T:_____

RELEASED - Printed documents may be obsolete; validate prior to use.

SECTION IV - OPERATION INSTRUCTIONS

SEQ/STEP	CMD	RESP	DESCRIPTION	VERIF.
			NOTE PERFORM THE FOLLOWING STEP IF THE FAULT/TEST LIGHT IS ILLUMINATED ON UOP_A1_FD2	
04-023	KEPS TLM	TLM MJ1	UOP_A1_FD2 1. PRESS “POWER OUT” BUTTON 2. VERIFY: ”FAULT/TEST” NO LONGER ILLUMINATED. 3. VERIFY: “ENABLE” NO LONGER ILLUMINATED (GREEN)	T:_____ NOT PERFORMED:_____
04-024	KEPS	SSFE	CES MATE LOAD AND RUN MATE SCRIPT MEIT3_MATE_CMDS INDEX 0X0098 CMD: JPM_EPS_PDU_A2_RPC11_(UOP_A1_FD2)_OP PUI: JSPX96IM0705K GMT _____:_____:_____ (HR:MIN:SEC)	
04-025	KEPS	SSFE	TCMS PDU A2:JPM EPS PDU A2 VERIFY: PDU A2 RPC11 PWR STATUS - OP ENG: PL_PDU_A RPC11 POWER STATUS PUI: JSDC00FCPF0QJ **OPTION G UOP_B1_AD2 DEACTIVATION**	
04-026	KEPS TLM	TLM MJ1	VERIFY ALL DEVICES CONNECTED TO JEM UOP_B1_AD2 ARE DEACTIVATED.	T:_____

RELEASED - Printed documents may be obsolete; validate prior to use.

SECTION IV - OPERATION INSTRUCTIONS

SEQ/STEP	CMD	RESP	DESCRIPTION	VERIF.
			NOTE PEFORM THE FOLLOWING STEP IF THE FAULT/TEST LIGHT IS ILLUMINATED ON UOP_B1_AD2	
04-027	KEPS		UOP_B1_AD2 1. PRESS “POWER OUT” BUTTON 2. VERIFY:”FAULT/TEST” NO LONGER ILLUMINATED. 3. VERIFY: “ENABLE” NO LONGER ILLUMINATED (GREEN)	
				T:_____
				NOT PERFORMED:_____
04-028	KEPS	SSFE	CES MATE: LOAD AND RUN MATE SCRIPT MEIT3_MATE_CMDS INDEX 0X009C CMD: JPM_EPS_PDU_B2_RPC13_(UOP_B1_AD2)_OP PUI: JSPX96IM0736K GMT _____:_____:_____ (HR:MIN:SEC)	
04-029	KEPS		TCMS: PDU B2:JPM EPS PDU B2 VERIFY: PDU B2 RPC 13 PWR STATUS - OP ENG: SYS_PDU_B RPC13 POWER STATUS PUI: JSDC00FCPG0SJ	
			OPTION H UOP_A2_FD4 DEACTIVATION	
04-030	KEPS TLM	TLM MJ1	VERIFY ALL EXPECTED DEVICES CONNECTED TO JEM UOP_A2_FD4 ARE DEACTIVATED.	
				T:_____

RELEASED - Printed documents may be obsolete; validate prior to use.

SECTION IV - OPERATION INSTRUCTIONS

SEQ/STEP	CMD	RESP	DESCRIPTION	VERIF.
			NOTE PEFORM THE FOLLOWING STEP IF THE FAULT/TEST LIGHT IS ILLUMINATED ON UOP_A2_FD4	
04-031	KEPS TLM	TLM MJ1	UOP_A2_FD4 1. PRESS “POWER OUT” BUTTON 2. VERIFY: ”FAULT/TEST” NO LONGER ILLUMINATED. 3. VERIFY: “ENABLE” NO LONGER ILLUMINATED (GREEN)	
				T:_____
				NOT PERFORMED:_____
04-032	KEPS	SSFE	CES MATE: LOAD AND RUN MATE SCRIPT MEIT3_MATE_CMDS INDEX: 0X0097 CMD: JPM_EPS_PDU_A2_RPC10_(UOP_A2_FD4)_OP PUI: JSPX96IM0704K GMT _____:_____:_____ (HR:MIN:SEC)	
04-033	KEPS		TCMS PDU A2:JPM EPS PDU A2 VERIFY: PDU A2 RPC10 PWR STATUS - OP ENG: PL_PDU_A RPC10 POWER STATUS PUI: JSDC00FCPFOPJ	
04-034	KEPS PTC 052	PTC DKQM	JEM UOP DE-ACTIVATION COMPLETE. GMT _____:_____:_____ (DAY:HR:MIN)	
				NV:_____

RELEASED - Printed documents may be obsolete; validate prior to use.

SECTION IV - OPERATION INSTRUCTIONS

SEQ/STEP	CMD	RESP	DESCRIPTION	VERIF.
05-000			**SLT ACTIVATION**	
05-001	PTC	DKQM	RECORD THE FOLLOWING INFORMATION: PROCEDURE/SEQ/STEP THAT CALLED THIS INSTRUCTION _____ GMT _____:_____:_____ (DAY:HR:MIN)	NV:_____
			NOTE PERFORM THE FOLLOWING STEP IF UOP IS POWERED OFF.	
05-002	PTC	KEPS DKQM	PERFORM JEM UOP PANEL ACTIVATION PER SEQUENCE 03 OF R2009 RECORD UOP OPTION _____ START GMT _____:_____:_____ (DAY:HR:MIN COMPLETE GMT _____:_____:_____ (DAY:HR:MIN)	NV:_____ NOT PERFORMED:_____

RELEASED - Printed documents may be obsolete; validate prior to use.

SECTION IV - OPERATION INSTRUCTIONS

SEQ/STEP	CMD	RESP	DESCRIPTION	VERIF.
			NOTE CONFIRM SLT <USER NAME> AND <PASSWORD BEFORE SLT ACTIVATION.	
05-003	KCDH TLM	TLM SLT	SLT 1. SLT PWR SW ON – TOGGLE ON (PUSH TOWARD THE REAR AND RELEASE) 2. VERIFY: SOLARIS LOGIN PROMPT DISPAYED. 3. ENTER:<USER NAME> ######### ENTER:<PASSWORD> - ######## GMT _____:_____:_____ (DAY:HR:MIN)	
05-004	KCDH TLM	TLM SLT	SLT VERIFY: CMDTOOL (CONSOLE) WINDOW” DISPLAYED	
05-005	KCDH TLM	TLM SLT	SLT RIGHT CLICK OUTSIDE “CMDTOOL (CONSOLE) WINDOW” SEL “ EXECUTE SLT ASW” GMT _____:_____:_____ (DAY:HR:MIN)	
			NOTE WAIT APPROXIMATELY 1 MINUTE BEFORE PROCEEDING TO THE NEXT STEP.	
			NOTE CONFIRM SAMMI <USER NAME> AND <PASSWORD> BEFORE SLT ACTIVATION.	
05-006	KCDH TLM	TLM SLT	SLT “SAMMI LOGIN WINDOW” 1. ENTER:<USER ID> -######### 2. ENTER: <PASSWORD>- ######## 3. VERIFY: JEM WINDOW IS DISPLAYED.	

RELEASED - Printed documents may be obsolete; validate prior to use.

SECTION IV - OPERATION INSTRUCTIONS

SEQ/STEP	CMD	RESP	DESCRIPTION	VERIF.
05-007	KCDH	TLM	SLT	
	TLM	SLT	VERIFY	
			GMT - UPDATING	
05-008	KCDH	PTC	SLT ACTIVATION COMPLETE.	
	PTC	DKQM		
	052			
			GMT _____:_____:_____ (DAY:HR:MIN)	
				NV:_____

RELEASED - Printed documents may be obsolete; validate prior to use.

SECTION IV - OPERATION INSTRUCTIONS

SEQ/STEP	CMD	RESP	DESCRIPTION	VERIF.
06-000			**SLT DEACTIVATION**	
06-001	PTC	DKQM	RECORD THE FOLLOWING INFORMATION: PROCEDURE/SEQ/STEP THAT CALLED THIS INSTRUCTION _____ GMT _____:_____:_____ (DAY:HR:MIN)	
				NV:_____
06-002	KCDH TLM	TLM SLT	SLT SEL “HOME: IN THE SCREEN UPPER RIGHT SEL “END” : IN THE SCREEN UPPER RIGHT CONFIRM MESSAGE : “SHUTDOWN SLT APPLICATION ? “ SEL “ OK”	
06-003	KCDH TLM	TLM SLT	SLT VERIFY: SLT WINDOWS ARE REMOVED	
06-004	KCDH TLM	TLM SLT	SLT RIGHT CLICK OUTSIDE “CMDTOOL (CONSOLE) WINDOW” SEL “QUIT” SEL “OK”	
06-005	KCDH TLM	TLM SLT	SLT VERIFY: SOLARIS LOGIN PROMPT DISPLAYED	
06-006	KCDH TLM	TLM SLT	SLT ENTER – “SHUTDOWN”	
06-007	KCDH TLM	TLM SLT	SLT VERIFY: MESSAGE “ TYPE ANY KEY TO CONTINUE”	
06-008	KCDH TLM	TLM SLT	SLT SLT PWR SW OFF – TOOGLE OFF (PUSH TOWARDS REAR AND RELEASE)	

RELEASED - Printed documents may be obsolete; validate prior to use.

SECTION IV - OPERATION INSTRUCTIONS

SEQ/STEP	CMD	RESP	DESCRIPTION	VERIF.
			NOTE PERFORM THE FOLLOWING STEP IF UOP DEACTIVATION IS REQUIRED.	
06-009	PTC	KCDH DKQM	PERFORM JEM UOP PANEL DEACTIVATION PER SEQUENCE 04 OF R2009 RECORD UOP OPTION _____ START GMT _____:_____:_____ (DAY:HR:MIN COMPLETE GMT _____:_____:_____ (DAY:HR:MIN)	NV:_____ NOT PERFORMED:_____
06-010	KCDH PTC 052	PTC DKQM	SLT DEACTIVATION COMPLETE. GMT _____:_____:_____ (DAY:HR:MIN)	NV:_____

RELEASED - Printed documents may be obsolete; validate prior to use.

SECTION IV - OPERATION INSTRUCTIONS

SEQ/STEP	CMD	RESP	DESCRIPTION	VERIF.
07-000			**SAVE FLIGHT PCS LOG FILES TO PCS HARD DRIVE**	
07-001	PTC	DKQM	RECORD THE FOLLOWING INFORMATION: PROCEDURE/SEQ/STEP THAT CALLED THIS INSTRUCTION _____ GMT _____:_____:_____ (DAY:HR:MIN)	
				NV:_____
			NOTE THIS SEQUENCE PROVIDES THE STEPS TO SAVE PCS LOG FILS AND RUNTIME FILES TO A USER SPECIFIED MEIT-UNIQUE DIRECTORY.	
07-002	KCDH		RECORD (LAPTOP INFORMATION): PLATFORM NAME:_____ PCS PART NO:_____ PCS SERIAL NO:_____ PCS OPS NAME:_____	

RELEASED - Printed documents may be obsolete; validate prior to use.

SECTION IV - OPERATION INSTRUCTIONS

SEQ/STEP	CMD	RESP	DESCRIPTION	VERIF.

UPDATE PCS LOG FILES

NOTE

IN ORDER TO GET THE LATEST C&W MESSAGES & ADVISORIES THE PCS MAY NEED TO BE DISCONNECTED FROM THE CONTROLLING MDM. PERFORM THE FOLLOWING STEP IF THE PCS IS CONNECTED TO THE MDM.

IN THE FOLLOWING STEP, BRING THE PCS CDS MAIN CONTROL PANEL TO THE TOP VIA “F2” KEY PER SPECIAL INSTRUCTION.

07-003 KCDH MS1 PCS
BRING “PCS CDS MAIN CONTROL PANEL” TO TOP
SELECT “DISCONNECT FROM MDM”

VERIFY
PCS STATUS: NOT CONNECTED
CONNECTION STATUS BOX: PURPLE

NOT PERFORMED:_____

NOTE

IF PCS CDS IS RUNNING, THEN THE LOG FILES MUST BE UPDATED PRIOR TO SAVING THEM. PERFORM THE FOLLOWING STEP TO UPDATE THE PCS LOG FILES.

IN THE INTEREST OF CONSERVING PROCESSOR TIME, THE PCS LOG FILES ARE PERIODICALLY SAVED TO HARD DISK, BUT NOT CONTINUALLY. THIS MEANS THAT THE LOG FILES THAT ARE CURRENTLY ON THE HARD DISK MAY NOT BE QUITE UP TO DATE.

IN THE FOLLOWING STEP, BRING THE PCS CDS MAIN CONTROL PANEL TO THE TOP VIA “F2” KEY, PER SPECIAL INSTRUCTION.

07-004 KCDH MS1 PCS
BRING “PCS CDS MAIN CONTROL PANEL” TO TOP
SELECT “COMMANDS” (GO TO FILE MENU)
SELECT “UPDATE LOG FILES”

NOT PERFORMED:_____

RELEASED - Printed documents may be obsolete; validate prior to use.

SECTION IV - OPERATION INSTRUCTIONS

SEQ/STEP	CMD	RESP	DESCRIPTION	VERIF.
			SAVE PCS LOGS	
			NOTE THE “SAVE LOGS” UTILITY WILL SAVE THE PCS LOG AND RUNTIME FILE TO A USER-SPECIFIED SUBDIRECTORY UNDER “/EXPORT/HOME/PCSUSER”.	
07-005	KCDH	MS1	PCS SELECT ARROW ABOVE “PCS” LOGO ON DESKTOP TOOLBAR. VERIFY: “PCS SOFTWARE CONTROLS” MENU IS ON SCREEN”	
07-006	KCDH	MS1	PCS (PCS SOFTWARE CONTROLS) SELECT “SAVE LOGS” VERIFY UNIX TERMINAL WINDOW IS ON SCREEN PROMPT: ********** * REMEMBER THAT IF CDS IS STILL RUNNING, YOU * MUST UPDATE LOG FILES ON THE HARD DISK * BEFORE SAVING THEM: * * ON THE PCSCDS MAIN CONTROL PANEL: * CHOOSE THE COMMAND MENU. * CHOSE UPDATE LOG FILES ********** PRESS THE ENTER KEY TO CONTINUE >	

RELEASED - Printed documents may be obsolete; validate prior to use.

SECTION IV - OPERATION INSTRUCTIONS

SEQ/STEP	CMD	RESP	DESCRIPTION	VERIF.

NOTE

IN THE FOLLOWING STEP, “LOGSDDMMYY/HH:MM:SS” WILL ACTUALY BE SHOWN WITH THE CURRENT DATE AND TIME: FOR EXAMPLE, “LOGS01APR99/12:00:00:00”. THE USER WILL RECORD THE DIRECTORY THE LOG FILES WILL BE SAVED TO.

07-007 KCDH MS1

```
PCS (TERMINAL)
PRESS <ENTER>

VERIFY
PROMPT:
*******************************************
* PLEASE SELECT THE NAME OF THE NEW DIRECTORY
* WHERE YOU WANT TO SAVE THE LOGS. THIS
* DIRECTORY WILL BE CREATED IN YOUR HOME
* DIRECTORY (/EXPORT/HOME/PCSUSER/)
*
* HIT RETURN TO SELECT THE DEFAULT
*
* OTHERWISE, TYPE IN AN ALTERNATE NAME.
*
*******************************************

ENTER DIRECTORY NAME
[DEFAULT:LOGSDDMMMYY/HH:MM:SS]>
```


RELEASED - Printed documents may be obsolete; validate prior to use.

SECTION IV - OPERATION INSTRUCTIONS

SEQ/STEP	CMD	RESP	DESCRIPTION	VERIF.
			NOTE IN THE FOLLOWING STEP YOU CAN EITHER TYPE THE DIRECTORY NAME (THE DIRECTORY MUST NOT ALREADY EXIST ON THE PCS) OR SELECT THE <ENTER> KEY TO USE DEFAULT DIRECTORY.	
07-008	KCDH	MS1	PCS (TERMINAL) AT PROMPT " ENTER DIRECTORY NAME [DEFAULT: LOGSDDMMMYY/HH:MM:SS]> OR SELECT THE <ENTER> KEY RECORD DIRECTORY NAME:_____ VERIFY PROMPT: .... COPYING PCS LOGS .... COPY OF LOGS COMPLETED .... COPYING PCS RUNTIME FILES .... COPY OF RUNTIME COMPLETED .... SAVELOGS COMPLETED .... **** PRESS ENTER TO CLOSE WINDOW ****	
07-009	KCDH	MS1	PCS (TERMINAL) AT PROMPT, "PRESS ENTER TO CLOSE WINDOW" PRESS <ENTER> VERIFY UNIX TERMINAL WINDOW DISAPEARS	

RELEASED - Printed documents may be obsolete; validate prior to use.

SECTION IV - OPERATION INSTRUCTIONS

SEQ/STEP	CMD	RESP	DESCRIPTION	VERIF.
			NOTE PERFORM THE FOLLOWING 2 STEPS IF NOT CONNECTED TO THE CONTROLLING MDM.	
			CLOSE PCS CDS	
07-010	KCDH	MS1	PCS CLOSE ALL CDDF DISPLAY WINDOWS. (C&W AND/OR ISS DISPLAYS) PCS (PCSCDS MAIN CONTROL PANEL) SELECT “COMMANDS” SELECT “SHUTDOWN” (TERMINATE PCSCDS) SELECT “OK” (SHUTDOWN CONFIRMATION) VERIFY “PCS CDS MAIN CONTROL PANEL” DISAPPEARS FROM THE SCREEN.	
			RECONNECT TO MDM	
			NOTE THE FOLLOWING STEP WILL START THE PCS CDS APPLICATION.	
07-011	KCDH	MS1	PCS TOOLBAR SELECT PCS SELECT START PCS VERIFY (APPROXIMATELY 3 MINUTES) PCS CDS MAIN CONTROL PANEL, C&W TOOL BAR AND/OR ISS DISPLAY APPEAR ON SCREEN	
				NOT PERFORMED:_____ (PREVIOUS 2 STEPS)
07-012	KCDH		RECORD REQUIRED INFORMATION IN APPENDIX A.	
07-013	KCDH PTC 052	PTC DKQM	SAVE FLIGHT PCS LOG FILES TO PCS HARDRIVE COMPLETE. GMT _____:_____:_____ (DAY:HR:MIN)	
				NV:_____

RELEASED - Printed documents may be obsolete; validate prior to use.

SECTION IV - OPERATION INSTRUCTIONS

SEQ/STEP	CMD	RESP	DESCRIPTION	VERIF.
08-000			**FLIGHT PCS ACTIVATION**	
08-001	PTC	DKQM	RECORD THE FOLLOWING INFORMATION: PROCEDURE/SEQ/STEP THAT CALLED THIS INSTRUCTION _____ GMT _____:_____:_____ (DAY:HR:MIN)	
				NV:_____
			NOTE THIS SEQUENCE PERFORMS ACTIVATION OF A PCS LAPTOP, INCLUDING CONNECTION TO THE CONTROLLING MDM.	
08-002	KCDH		RECORD (LAPTOP INFORMATION) PLATFORM NAME:_____ PCS PART NO:_____ PCS SERIAL NO:_____ 1553 BUS CONNECTION:_____	
			POWER ON PCS LAPTOP	
08-003	KCDH	MS1	PCS PCS POWER SW –TOGGLE ON (PUSH TOWARDS REAR AND RELEASE) VERIFY (AFTER APPROXIMATELY 2 MINUTES) BLUE SOLARIS DESKTOP IS ONSCREEN.	

RELEASED - Printed documents may be obsolete; validate prior to use.

SECTION IV - OPERATION INSTRUCTIONS

SEQ/STEP	CMD	RESP	DESCRIPTION	VERIF.

NOTE

IF MDM CONNECTION IS NOT SUCCESSFUL, THEN AN ERROR MESSAGE ABOUT PCS SIGN ON FAILURE WILL BE RECEIVED AND THE PCS SOFTWARE MAY NEED TO BE RESTARTED WHEN THE CONTROLLING MDM IS POLLING. PERFORM/REPEAT THE FOLLOWING STEP AS NEEDED UNTIL CONNECTION IS SUCCESSFUL. IF MDM CONNECTION IS NOT SUCCESSFUL AFTER THREE ATTEMPTS PERFORM STEP 08-005.

NOTE

THE PCS LOGO IS AT THE FAR LEFT OF THE SOLARIS DESKTOP TOOLBAR, WHICH IS LOCATED AT THE BOTTOM OF THE SCREEN.

08-004 KCDH MS1 PCS
SELECT “OK” TO ACKNOWLEDGE ERROR MESSAGE.

PCS CDS MAIN CONTROL PANEL
SELECT “COMMANDS”
SELECT “SHUTDOWN”
SELECT “YES”

SELECT ARROW ABOVE “PCS” LOGO ON DESKTOP TOOLBAR AND SELECT “START PCS” OR SELECT “PCS” UNDER THE ARROW.

NOT PERFORMED:_____

STEP REPEATED:_____

RELEASED - Printed documents may be obsolete; validate prior to use.

SECTION IV - OPERATION INSTRUCTIONS

SEQ/STEP	CMD	RESP	DESCRIPTION	VERIF.

NOTE

PERFORM THE FOLLOWING STEP IF THE PREVIOUS WAS NOT SUCCESSFUL AFTER THE THIRD ATTEMPT.

08-005 KCDH MS1

PCS
SELECT “OK” TO ACKNOWLEDGE ERROR MESSAGE

PCS CDS MAIN CONTROL PANEL
SELECT “COMMANDS”
SELECT “SHUTDOWN”
SELECT “YES”

SELECT “EXIT” LOGO ON DESKTOP TOOLBAR AND
SELECT “OK”

VERIFY (AFTER APPROXIMATELY 30 SECONDS)
MESSAGE ONSCREEN: “TYPE ANDY KEY TO CONTINUE”
OR
HORIZONTAL LINE APPEAR ON THE SCREEN

PCS
PCS POWER SW- TOGGLE OFF
(PUSH TOWARDS REAR AND RELEASE)

PCS
PCS POWER SW – TOGGLE ON
(PUSH TOWARDS REAR AND RELEASE)

VERIFY (AFTER APPROXIMATELY 2 MINUTES)
BULE SOLARIS DESKTOP IS ON SCREEN.

NOT PERFORMED:_____

RELEASED - Printed documents may be obsolete; validate prior to use.

SECTION IV - OPERATION INSTRUCTIONS

SEQ/STEP	CMD	RESP	DESCRIPTION	VERIF.

PCS TIME CONFIGURATION

NOTE

THE “SET PCS TIME” WINDOW MAY NOT AUTOMATICALLY APPEAR ON TOP IN THE FOLLOWING STEP. IT MAY BE HIDDEN BEHIND EXISTING WINDOWS. IF NECESSARY, BRING THE “SET PCS TIME” WINDOW TO THE TOP AS REQUIRED PER SPECIAL INSTRUCTION.

NOTE

PCS USES THE GMT RECEIVED FROM THE C&C MDM TO UPDATE THE INTERNAL CLOCK OF THE PCS LAPTOP. IF THE CURRENT PCS TIME IS NO MORE THEN 10 SECONDS AHEAD OR 60 SECONDS BEHIND THE MDM TIME THE PCS TIME IS AUTOMATICALLY SET TO THE MDM TIME AND THIS STEP IS NOT REQUIRED. OTHERWISE THE USER IS PROMPTED WITH THE FOLLOWING OPTIONS BASED ON C&C MDM TIME RECEIVED.

1) USE MDM TIME

2) USE PCS TIME

3) UPDATE PCS TIME

NOTE

THE TASK LEADER SHOULD PERFORM ONLY ONE OF THE THREE AVAILABLE OPTIONS. THE OPTIONS PERFORMED WILL BE ANNOTATED WITH THE TASK LEADER BUY OFF.

NOTE

IF A TIME SELECTED THAT SETS THE PCS CLOCK BACKWARDS MORE THEN TEN SECONDS, ALL PREVIOUSLY OPEN DISPLAYS ARE CLOSED AND ONLY ALARM TOOL, C&W & HOME PAGE ARE REOPENED.

RELEASED - Printed documents may be obsolete; validate prior to use.

SECTION IV - OPERATION INSTRUCTIONS

SEQ/STEP	CMD	RESP	DESCRIPTION	VERIF.
08-006	KCDH	MS1	OPTION 1: PCS (SYSTEM TIME UPDATE) SELECT “USE MDM” BUTTON VERIFY SYSTEM TIME UPDATE WINDOW DISAPPEARS OPTION 2: PCS (SYSTEM TIME UPDATE) SELECT “USE PCS TIME” BUTTON VERIFY SYSTEM TIME UPDATE WINDOW DISAPPEARS. **NOTE** SET THE PCS INTERNAL TIME PER SCDH/KCDH DIRECTION IN THE FOLLOWING SUB-STEP, AND BE AWARE THERE MAY BE A 1-2 SECOND DELAY FROM THE TIME THE “APPLY” BUTTON IS SELECTED AND THE TIME PCS INTERNAL TIME ACTUALLY UPDATES. OPTION 3: PCS (SET PCS TIME) USE UP/DOWN ARROWS AND/OR TYPE DIRECTLY INTO THE UPDATE FIELDS TO SET PCS INTERNAL TIME AS REQUIRED BUT SCDH/KCDH. RECORD: M/D/Y H:M:S_____/_____/____ ____:_____:_____ PCS (SET PCS TIME) SELECT “APPLY” (UPDATE PCS INTERNAL TIME)	

TL:_____

OPTION SELECTED:_____

NOT PERFORMED:_____

RELEASED - Printed documents may be obsolete; validate prior to use.

SECTION IV - OPERATION INSTRUCTIONS

SEQ/STEP	CMD	RESP	DESCRIPTION	VERIF.
			VERIFY PCS CONNECTED TO MDM	
08-007	KCDH	MS1	PCS (PCS CDS MAIN CONTROL PANEL) VERIFY PCS CONNECTION STATUS: CONNECTED CONNECTION STATUS BOX:GREEN ISS DISPLAY ON SCREEN CAUTION AND WARNING TOOLBAR AT TOP OF SCREEN.	
08-008	KCDH	MS1	PCS(PCS CDS MAIN CONTROL PANEL) CLICK “ SYSTEM” SELECT “CONNECTION” RECORD: RT:ADDRESS:_____ LOGICAL NODE:_____	
08-009	KCDH PTC 052	PTC DKQM	FLIGHT PCS ACTIVATION COMPLETE. GMT _____:_____:_____ (DAY:HR:MIN)	
				NV:_____

RELEASED - Printed documents may be obsolete; validate prior to use.

SECTION IV - OPERATION INSTRUCTIONS

SEQ/STEP	CMD	RESP	DESCRIPTION	VERIF.
09-000			**FLIGHT PCS DEACTIVATION**	
09-001	PTC	DKQM	RECORD THE FOLLOWING INFORMATION: PROCEDURE/SEQ/STEP THAT CALLED THIS INSTRUCTION _____ GMT _____:_____:_____ (DAY:HR:MIN)	
				NV:_____
			NOTE THIS SEQUENCE PERFORMS SHUTDOWN OF THE PCS SOFTWARE AND DEACTIVATES THE LAPTOP. THE DEACTIVATION SEQUENCE IS THE SAME WHETHER THE IBM THINKPAD MODEL 760XD A FLIGHT OR GROUND (COTS) UNIT.	
09-002	KCDH		RECORD (LAPTOP INFORMATION) PLATFORM NAME:_____ PCS PART NO:_____ PCS SERIAL NUMBER:_____ 1553 BUS CONNECTION:_____	
			SHUTDOWN PCS LAPTOP SOFTWARE	
09-003	KCDH	MS1	PCS CLOSE ALL CDDF DISPLAY WINDOWS, (C&W AND OR ISS DISPLAYS)	

RELEASED - Printed documents may be obsolete; validate prior to use.

SECTION IV - OPERATION INSTRUCTIONS

SEQ/STEP	CMD	RESP	DESCRIPTION	VERIF.
			NOTE IN THE FOLLOWING STEP, BRING THE PCS CDS MAIN CONTROL PANEL TO THE TOP VIA “F2” KEY, PER SPECIAL INSTRUCTION.	
09-004	KCDH	MS1	PCS BRING “PCS CDS MAIN CONTROL PANEL” TO TOP SELECT “TERMINATE CONNECTION” VERIFY PCS CONNECTION STATUS: NOT CONNECTED CONNECTION STATUS BOX: PURPLE	
09-005	KCDH	MS1	PCS (PCSCDS MAIN CONTROL PANEL) SELECT “COMMANDS” SELECT “SHUTDOWN” (TERMINATE PCS CDS) SELECT “OK” (SHUTDOWN CONFIRMATION) VERIFY “PCS CDS MAIN CONTROL PANEL” DISAPPEARS FROM THE SCREEN.	
09-006	KCDH	MS1	PCS SELECT DESKTOP “EXIT” BUTTON SELECT “OK” (LOGOUT CONFIRMATION) VERIFY (AFTER APPROXIMATELY 30 SECONDS) MESSAGE ONSCREEN:”TYPE ANY KEY TO CONTINUE” OR VERIFY (AFTER APPROXIMATELY 30 SECONDS) HORIZONTAL COLORED LINES APPEAR ON THE SCREEN.	

RELEASED - Printed documents may be obsolete; validate prior to use.

SECTION IV - OPERATION INSTRUCTIONS

SEQ/STEP	CMD	RESP	DESCRIPTION	VERIF.
			POWER OFF PCS LAPTOP	
			NOTE THE PCS LAPTOP POWER SWITCH IS LOCATED AT THE REAR OF THE LEFT SIDE OF THE COMPUTER.	
09-007	KCDH	MS1	PCS PCS POWER SW – TOGGLE OFF (PUSH TOWARDS REAR AND RELEASE)	
09-008	KCDH PTC 052	PTC DKQM	FLIGHT PCS DEACTIVATION COMPLETE. GMT _____:_____:_____ (DAY:HR:MIN)	
				NV:_____

RELEASED - Printed documents may be obsolete; validate prior to use.

SECTION IV - OPERATION INSTRUCTIONS

SEQ/STEP	CMD	RESP	DESCRIPTION	VERIF.
10-000			**FLIGHT PCS SCREEN CAPTURE**	
10-001	PTC	DKQM	RECORD THE FOLLOWING INFORMATION: PROCEDURE/SEQ/STEP THAT CALLED THIS INSTRUCTION _____ GMT _____:_____:_____ (DAY:HR:MIN)	
				NV:_____

NOTE

THIS SEQUENCE PROVIDES THE STEPS REQUIRED TO SAVE A “SNAPSHOT” OF A PCS DISPLAY INTO A .GIF IMAGE FILE. THE FILE IS SAVED INTO THE APPROPRIATE MEIT-UNIQUE SUBDIRECTORY OF “/EXPORT/HOME/PCSUSER/”.

10-002	KCDH		RECORD (LAPTOP INFORMATION) PLATFORM NAME:_____ PCS PART NO:_____ PCS SERIAL NO:_____ 1553 BUS CONNECTION:_____

RELEASED - Printed documents may be obsolete; validate prior to use.

SECTION IV - OPERATION INSTRUCTIONS

SEQ/STEP	CMD	RESP	DESCRIPTION	VERIF.
			NOTE TO PROVIDE CONSISTENCY IN THE LOCATION OF PCS SCREEN IMAGE FILES THAT ARE SAVED DURING TEST ACTIVITIES. MEIT-UNIQUE FILE DIRECTORIES ARE TO BE ALREADY SET.	
			CREATE NEW DIRECTORY FOR IMAGE FILE(S) IF REQUIRED	
			NOTE PERFORM THE FOLLOWING 6 STEPS AT THE DISCRESSION OF KCDH/SSFE, IF A NEW MEIT UNIQUE SUBDIRECTORY IS REQUIRED FOR THIS IMAGE FILE.	
			OPEN A UNIX TERMINAL WINDOW	
10-003	KCDH	MS1	PCS RIGHT CLICK ON DESKTOP SELECT “PROGRAMS” SELECT “TERMINAL” VERIFY TERMINAL WINDOW IS ONSCREEN	
			NOTE IN THE FOLLOWING STEP, AND FOR THE REMAINDER OF THIS SEQUENCE, “MEIT3” IS THE DIRECTORY NAME PROVIDED BY KCDH.	
10-004	KCDH	MS1	PCS (TERMINAL) TYPE “CD/EXPORT/HOME/PCSUSER/MEIT3” <ENTER> (GO TO APPLICABLE MEIT-UNIQUE USER DIRECTORY) RECORD MEITX_PHASEY:_____	

RELEASED - Printed documents may be obsolete; validate prior to use.

SECTION IV - OPERATION INSTRUCTIONS

SEQ/STEP	CMD	RESP	DESCRIPTION	VERIF.

NOTE

WHEN CREATING A NEW SUBDIRECTORY IN THE FOLLOWING STEP USE THE FOLLOWING NAMING CONVENTION PER KCDH DIRECTION."MMDD_HHNN", WHERE MM=MONTH, DD=DAY, HH=HOURS AND NN=MINUTE THAT THE FILES ARE BEING SAVED.

10-005 KCDH MS1 PCS (TERMINAL)

TYPE "MKDIR MMDD_HHNN" <ENTER>
(CREATE DIRECTORY FOR IMAGE FILES TO BE SAVED)

RECORD
MMDD_HHNN : _____

10-006 KCDH MS1 PCS (TERMINAL)
TYPE "PWD" <ENTER>
(CHECK PATH TO CURRENT WORKING DIRECTORY)

VERIFY
"/EXPORT/HOME/PCSUSER/MEIT3" IS ON SCREEN.

10-007 KCDH MS1 PCS (TERMINAL)
TYPE "LS-L" <ENTER>
(LIST FILES IN CURRENT DIRECTORY)

VERIFY
NEWLY CREATED SUBDIRECTORY IS PRESENT

EXIT FROM UNIX TERMINAL WINDOW

10-008 KCDH MS1 PCS
SELECT TERMINAL WINDOW
TYPE "EXIT" <ENTER>
(EXIT TERMINAL WINDOW)

VERIFY:
TERMINAL WINDOW DISAPPEARS

NOT PERFORMED:_____
(PREV. 6 STEPS)

RELEASED - Printed documents may be obsolete; validate prior to use.

SECTION IV - OPERATION INSTRUCTIONS

SEQ/STEP	CMD	RESP	DESCRIPTION	VERIF.
			NOTE PERFORM THE FOLLOWING 16 STEPS AS REQUIRED BY KCDH TO CAPTURE THE REQUIRED PCS DISPLAYS AND SAVE THEM IN .TIFF FILES OR OTHER SUPPORTED EXTENSIONS. **PUT DESIRED WINDOW ON TOP** **NOTE** IF THE DESIRED DISPLAY IS NOT HE TOPMOST WINDOW, THEN THE SNAPSHOT WILL NOT GATHER THE CORRECT DATA. INSTEAD IT WILL TAKE A SNAPSHOT OF THE AREA DEFINED BY THE WINDOW. BUT INCLUDE THE PORTIONS OF OVERLYING DISPLAYS THAT COVER UP THE DESIRED WINDOW. PERFORM THE FOLLOWING STEP TO ENSURE THE ENTIRE DISPLAY WILL BE CORRECTLY CAPTURED.	
10-009	KCDH	MS1	PCS SELECT DESIRED PCS DISPLAY WINDOW VERIFY DESIRED PCS DISPLAY WINDOW IS TOPMOST DISPLAY ON THE SCREEN. **CREATE SNAPSHOT OF DESIRED DISPLAY WINDOW** **NOTE** IN THE FOLLOWING STEP, “V3.S” IS THE VERSION OF THE SNAPSHOT SOFTWARE APPLICATION WHICH IS 3.0 OR HIGHER.	
10-010	KCDH	MS1	PCS RIGHT CLICK ON DESKTOP SELECT “PROGRAMS” SELECT “SNAPSHOT” VERIFY: “SNAPSHOT V3.X” WINDOW IS ON SCREEN.	

RELEASED - Printed documents may be obsolete; validate prior to use.

SECTION IV - OPERATION INSTRUCTIONS

SEQ/STEP	CMD	RESP	DESCRIPTION	VERIF.
			NOTE IF THE SNAP TYPE IS NOT ALREADY “WINDOW” THEN PERFORM THE FOLLOWING STEP.	
10-011	KCDH	MS1	PCS (SNAPSHOT V3.X) AT FIELD, “SNAP TYPE” SELECT “WINDOW”	
				NOT PERFORMED:_____
10-012	KCDH	MS1	PCS (SNAPSHOT V3.X) VERIFY SNAP TYPE: WINDOW	
10-013	KCDH	MS1	PCS (SNAPSHOT V3.X) SELECT TARGET “ HIDE WINDOW DURING CAPTURE” VERIFY BOX IS CHECKED SNAP DELAY: 8 SECONDS VERIFY MESSAGE AT BOTTOM OF WINDOW: “TIMER ADJUSTED TO GUARANTEE CORRECT OPERATION”	
10-014	KCDH	MS1	PCS (SNAPSHOT V3.X) SELECT “SNAP” VERIFY MESSAGE AT BOTTOM OF WINDOW “SELECT-SELECT WINDOW. ADJUCT OR MENU- “	
			NOTE WHEN YOU CLICK ON THE DESIRED WINDOW IN THE NEXT STEP, THE SNAPSHOT WINDOW WILL DISAPPEAR FOR APPROXIMATELY 8-16 SECONDS. WHEN IT HAS REAPPEARED, YOU MAY PROCEED.	
10-015	KCDH	MS1	PCS LEFT CLICK ONPCS DISPLAY TO BE SAVED. VERIFY (WITHIN 8-16 SECONDS) SNAPSHOT WINDOW DISAPPEARS, THEN REAPPEARS. VERIFY MESSAGE AT BOTTOM OF WINDOW: “SNAP SUCCEEDED	

RELEASED - Printed documents may be obsolete; validate prior to use.

SECTION IV - OPERATION INSTRUCTIONS

SEQ/STEP	CMD	RESP	DESCRIPTION	VERIF.

SAVE CAPTURED FILE USING IMAGE TOOL

NOTE

IN THE FOLLOWING STEP. “V3.X” IS THE VERSION OF THE IMAGE TOOL APPLICATION, WHICH IS VERSION 3.0 OR HIGHER.

10-016 KCDH MS1 (SNAPSHOT V3.X)
SELECT “VIEW”

VERIFY
“SNAPSHOT VIEW IS ON SCREEN”

10-017 KCDH MS1 (IMAGE TOOL V3.X)
SELECT “FILE”
SELECT “SAVE AS...”

VERIFY
“IMAGE TOOL: SAVE AS” IS ON SCREEN

NOTE

“/EXPORT/HOME/PCSUSER/” IS THE DEFAULT DIRECTORY/FOLDER.

IN THE FOLLOWING STEP, AND FOR THE REMAINDER OF THE SEQUENCE, “MEIT3/MMDD_HHNN” IS THE SUBDIRECTORY NAME PROVIDED BY KCDH

IN THE FOLLOWING STEP, A FOLDER CAN BE OPENED EITHER BY SELECTING THE “OPEN FOLDER” BUTTON AT THE BOTTOM OF WINDOW, OR BY DOUBLE-CLICKING ON THE FOLDER NAME.

10-018 KCDH MS1 PCS (IMAGE TOOL: SAVE AS)
AT FIELD, “ SELECT A FILE OR FOLDER AND CLICK ‘OPEN FOLDER’”,

VERIFY CURRENT FOLDER:

RECORD
FOLDER:_____

RELEASED - Printed documents may be obsolete; validate prior to use.

SECTION IV - OPERATION INSTRUCTIONS

SEQ/STEP	CMD	RESP	DESCRIPTION	VERIF.
			NOTE IN THE FOLLOWING STEP, “DNAME: IS PROVIDED BY KCDH, BECAUSE THE FILE MAY EVENTUALLY BE TRANSFERRED TO FLOPPY DISK, AND BECAUSE THE FLOPPY DISK FILE NAMES ARE LIMITED TO 8 CHARACTERS, LIMIT “DNAME: TO AN 8-CHARACTER-OR-LESS DISPLAY DESCRIPTION. FOR EXAMPLE “PCC&DH” IN THE FOLLOWING STEP, TYPE OVER “UNTITLED 1” WITH “DNAME”, FOLLOWED BY “.TIFF”.	
10-019	KCDH	MS1	PCS (IMAGE TOOL: SAVE AS) AT FIELD, “SAVE AS:” ENTER “DNAME.TIFF” RECORD DNAME.TIFF :_____	
			NOTE THE SUN RASTER FILE FORMAT IS THE DEFAULT.	
10-020	KCDH	MS1	PCS (IMAGE TOOL: SAVE AS) AT FIELD, “FILE FORMAT” SELECT “TIFF” (SELECT TIFF FORMAT) VERIFY FILE FORMAT SUN RASTER: DESELECTED TIFF: SELECTED COMPRESSION: TIFF COLORS :MILLIONS	
10-021	KCDH	MS1	PCS (IMAGE TOOL: SAVE AS) SELECT “SAVE”	
10-022	KCDH	MS1	PCS (CONTINUE? POPUP) SELECT “YES”	
10-023	KCDH	MS1	PCS (IMAGE TOOL V3.X) CLICK ON UPPER LEFT CORNER OF WINDOW SELECT “CLOSE” (CLOSE IMAGE TOOL) VERIFY IMAGE TOOL WINDOW DISAPPEARS	

RELEASED - Printed documents may be obsolete; validate prior to use.

SECTION IV - OPERATION INSTRUCTIONS

SEQ/STEP	CMD	RESP	DESCRIPTION	VERIF.
10-024	KCDH	MS1	PCS SELECT SNAPSHOT WINDOW CLICK ON UPPER LEFT CORNER OF WINDOW SELECT “CLOSE” VERIFY SNAPSHOT WINDOW DISAPPEARS	
10-025	KCDH		RECORD REQUIRED INFORMATION IN APPENDIX C	
			NOTE IF ADDITIONAL PCS DISPLAYS ARE TO BE CAPTURED AND SAVED AS .TIFF FILES, REPEAT THE PREVIOUS 16 STEPS AS REQUIRED BY KCDH	
10-026	KCDH PTC 052	PTC DKQM	FLIGHT PCS SCREEN CAPTURE COMPLETE. COMPLETE. GMT _____:_____:_____ (DAY:HR:MIN)	

NV:_____

RELEASED - Printed documents may be obsolete; validate prior to use.

SECTION IV - OPERATION INSTRUCTIONS

SEQ/STEP	CMD	RESP	DESCRIPTION	VERIF.
11-000			**COPY FLIGHT PCS SAVED FILES TO FLOPPY DISK**	
11-001	PTC	DKQM	RECORD THE FOLLOWING INFORMATION: PROCEDURE/SEQ/STEP THAT CALLED THIS INSTRUCTION _____ GMT _____:_____:_____ (DAY:HR:MIN)	
				NV:_____

NOTE

THIS SEQUENCE PROVIDES THE STEPS TO COPY PCS LOG AND/OR IMAGE FILES FROM THE LAPTOP HARD DISK TO A FLOPPY DISK.

THIS PCS LOG FILE SAVE SEQUENCE IS THE SAME WHERE THE IBM THINKPAD MODEL 760XD IS CONFIGURED AS A FLIGHT OR GROUND (COTS) PCS UNIT.

THE EXTERNAL FLOPPY DRIVE IS EXPECTED TO BE INSTALLED. THE 1.4MB FLOPPY DISK IS PROVIDED BY KCDH AND IS EXPECTED TO BE DOS-FORMATED.

11-002	KCDH	RECORD (LAPTOP INFORMATION) PLATFORM:_____ PCS PART NO:_____ PCS SERIAL NUMBER:_____

RELEASED - Printed documents may be obsolete; validate prior to use.

SECTION IV - OPERATION INSTRUCTIONS

SEQ/STEP	CMD	RESP	DESCRIPTION	VERIF.

NOTE

IF THE PCS IS POWERED OFF THEN PERFORM THE FOLLOWING TWO STEPS.

POWER ON AND RE-BOOT PCS LAPTOP

11-003 KCDH MS1 PCS
PCS POWER SW- TOGGLE ON
(PUSH TOWARDS REAR AND RELEASE)

11-004 KCDH MS1 PCS
VERIFY (AFTER APPROXIMATELY 2 MINUTES)
BLUE SOLARIS DESKTOP IS ON SCREEN.

NOT PERFORMED:_____
(PREV. 2 STEPS)

OPEN A UNIX TERMINAL WINDOW

11-005 KCDH MS1 PCS
RIGHT CLICK ON DESKTOP
SELECT “PROGRAMS”
SELECT “TERMINAL”

VERIFY
TERMINAL WINDOW IS ONSCREEN

NOTE

REPEAT THE FOLLOWING 16 STEPS AS REQUIRED BY KCDH TO COPY THE DESIRED FILE(S) TO THE FLOPY DISK(S) AND RECORD THE DISKETTE. DIRECTORY AND FILE NAME.

INSERT FLOPPY DISK INTO DRIVE

NOTE

THE FLOPPY DISK MUST BE DOS-FORMATTED.

11-006 KCDH MS1 PCS
INSERT FLOPPY DISKETTE INTO DISKETTE DRIVE.

RECORD
DISKETTE NAME:_____

RELEASED - Printed documents may be obsolete; validate prior to use.

SECTION IV - OPERATION INSTRUCTIONS

SEQ/STEP	CMD	RESP	DESCRIPTION	VERIF.
11-007	KCDH	MS1	PCS (TERMINAL) TYPE “EJECT –D” <ENTER>	
			NOTE IGNORE THE “DEFAULT DEVICE IS “ MESSAGE AFTER THE “EJECT –D” COMMAND. THE DEFAULT FLOPPY DIRECTORY TO BE USED IS “/FLOPPY/FLOPPY0”.	
			COPY LOG FILES TO FLOPPY DRIVE	
			NOTE FOR THE FOLLOWING STEP, THE “MEIT3/MMDD_HHNN” PORTION OF THE DIRECTORY NAME IS PROVIDED BY KCDH. WHERE X=1,2,3..., Y=1,2,3 . . . , MM = MONTH, DD=DAY, HH=HOUR, NN=MINUTES. EXAMPLE: MEIT3/0401_1200.	
11-008	KCDH	MS1	PCS (TERMINAL) TYPE”CD/EXPORT/HOME/PCSUSER/<SAVED FILE DIRECTORY>” <ENTER> (GO TO DIRECTORY CONTAINING PREVIOUS SAVED FILES) RECORD DIRECTORY NAME:_____	
11-009	KCDH	MS1	PCS (TERMINAL) TYPE “LS –L” <ENTER> (LIST FILES IN CURRENT DIRECTORY) VERIFY DESIRED FILES ARE IN DIRECTORY.	

RELEASED - Printed documents may be obsolete; validate prior to use.

SECTION IV - OPERATION INSTRUCTIONS

SEQ/STEP	CMD	RESP	DESCRIPTION	VERIF.

NOTE

IN THE FOLLOWING STEP, THE LOG, RUNTIME AND/OR .TIFF IMAGE FILES ARE TARRED TOGETHER INTO ONE FILE, NAMED “MMDDHHNN” (USE THE SAME NAME FOR THIS FILE AS FOR THE SUBDIRECTORY, ONLY WITHOUT THE UNDERLINE CHARACTER, SO THAT THE NAME WILL REMAIN THE SAME WHEN TRANSFERRED TO FLOPPY DISKETTE. (WHICH HAS AN 8-CHARACTER LIMIT).

11-010	KCDH	MS1	(TERMINAL) TYPE “TAR –CVF MMDDHHNN” (PLACE CONTENTS OF CURRENT DIRECTORY IN TAR FILE NAMED “MMDDHHNN”, AND SAVE IN THE SAME DIRECTORY) RECORD MMDDHHNN:_____
11-011	KCDH	MS1	(TERMINAL) TYPE “LS –L” <ENTER> (LIST FILES IN CURRENT DIRECTORY) VERIFY FILE “MMDDHHNN IS IN THE DIRECTORY

NOTE

THE TAR FILE IS COMPRESSED IN THE NEXT STEP SO THAT IT WILL FIT ON A 1.4 MB FLOPPY DISK. NOTE THAT WHEN THE FILE IS COMPRESSED ITS NAME WILL CHANGE FROM “MMDDHHNN” TO “MDDHHNN.Z”

11-012	KCDH	MS1	PCS (TERMINAL) TYPE “COMPRESS MMDDHHNN” <ENTER> (COMPRESS FILE AND SAVE IN THE SAME DIRECTORY).

RELEASED - Printed documents may be obsolete; validate prior to use.

SECTION IV - OPERATION INSTRUCTIONS

SEQ/STEP	CMD	RESP	DESCRIPTION	VERIF.
11-013	KCDH	MS1	PCS (TERMINAL) TYPE “LS –L” <ENTER> (LIST FILES IN CURRENT DIRECTORY) VERIFY FILE “MMDDHHNN.Z” IS IN THIS DIRECTORY	
11-014	KCDH	MS1	PCS (TERMINAL) TYPE “CD MMDDHHNN.Z /FLOPPY/FLOPPY0” <ENTER> (COPY COMPRESSED TAR FILE TO FLOPPY DRIVE)	
11-015	KCDH	MS1	PCS (TERMINAL) TYPE “CD/FLOPPY/FLOPPY0” <ENTER> (GO TO FLOPPY DIRECTORY)	
11-016	KCDH	MS1	PCS (TERMINAL) TYPE “LS –L” <ENTER> (LIST FILES IN CURRENT DIRECTORY) VERIFY FILE “MMDDHHNN.Z” IS IN THIS DIRECTORY. **REMOVE FLOPPY DISKETTE FROM DRIVE** **NOTE** REMOVE THE FLOPPY DISKETTE PER THE FOLLOWING 4 STEPS AT TASK LEADER DIRECTION, IF NO ADDITIONAL FILES ARE TO BE COPIED OR DISKETTE IS FULL. THE FLOPPY DISKETTE CANNOT BE REMOVED FROM THE DISKETTE DRIVE WHEN YOU ARE IN /FLOPPY/FLOPPY0 DIRECTORY.	
11-017	KCDH	MS1	PCS (TERMINAL) TYPE “CD/” <ENTER> (GO TO ROOT DIRECTORY)	
11-018	KCDH	MS1	PCS (TERMINAL) TYPE “EXIT”	
11-019	KCDH	MS1	PCS PRESS FLOPPY DRIVE EJECT BUTTON (THE FLOPPY DRIVE LOCATED ON THE RIGHT SIDE OF THE LAPTOP)	

RELEASED - Printed documents may be obsolete; validate prior to use.

SECTION IV - OPERATION INSTRUCTIONS

SEQ/STEP	CMD	RESP	DESCRIPTION	VERIF.
11-020	KCDH	MS1	PCS REMOVE FLOPPY DISKETTE FROM DISKETTE DRIVE.	
				NOT PERFORMED:_____ (PREV. 4 STEPS)
			NOTE IF ADDITIONAL LOG FILES ARE BE COPIED TO FLOPPY DISK (S). REPEAT THE PREVIOUS 16 STEPS AS REQUIRED BY KCDH/DSWF	
11-021	KCDH	MS1	ALL DESIRED LOG FILES ARE NOW COPIED TO FLOPPY DISK.	
			CLOSE UNIX TERMINAL WINDOW	
11-022	KCDH	MS1	PCS (TERMINAL) TYPE “EXIT” <ENTER> (EXIT TERMINAL WINDOW) VERIFY TERMINAL WINDOW DISAPPEARS	
11-023	KCDH		RECORD REQUIRED INFORMATION IN APPENDIX B	
11-024	KCDH PTC 052	PTC DKQM	COPY OF FLIGHT PCS SAVED FILES TO FLOPPY DISK COMPLETE. GMT _____:_____:_____ (DAY:HR:MIN)	
				NV:_____

RELEASED - Printed documents may be obsolete; validate prior to use.

SECTION IV - OPERATION INSTRUCTIONS

SEQ/STEP	CMD	RESP	DESCRIPTION	VERIF.
12-000			**FLIGHT MEMORY DATA DUMP FROM PRIMARY JCP**	
12-001	PTC	DKQM	RECORD THE FOLLOWING INFORMATION: PROCEDURE/SEQ/STEP THAT CALLED THIS INSTRUCTION _____ GMT _____:_____:_____ (DAY:HR:MIN)	NV:_____

CAUTION

THE ADDRESSES ‘0X00000000’ THROUGH ‘0X009FFFFF’ ARE AVAILABLE FOR MEMORY DUMP ONLY FOR THE ACTIVE JCP. START ADDRESS + MEMORY LENGTH SHOULD NOT SURPAS THE LAST ADDRESS ‘0X009FFFFF’.

NOTE

THE MEMORY DUMP COMMAND TO THE JCP SHOULD BE PERFORMED PRIOR TO THE SETUP PIPE TO ENSURE THAT THE DUMP HEADER IS VALID.

NOTE

IN THE FOLLOWING STEP, THE MEMORY LENGTH IS IN BYTES, NOT WORDS AS FOR USOS MDMS. **MEMORY LENGTH SHALL BE AN INTEGRAL MULTIPLE OF 172 BYTES** (86 WORDS)(REFERENCE SSP 41151, TABLE D.3.3.2.3.4.2-1.)

12-002	KCDH	SSFE	CES MATE SELECT FROM DATABASE, JSDC00SW8FT0L C&C MDM TO JCP MEMORY DUMP START COMMAND (JSDD96IM0001K, PRIM_JCP_START_MEMORY_ DUMP_TO_MDM_TMPLT) BC SUBADDRESS (JSDC00SW8FT1K) = 24 MEMORY TYPE (JSDC00SW8FT2K) = RAM (0) DUMP TYPE (JSDC00SW7FT2K) = NORMAL (0) DUMP MODE (JSDC00SW8FT5K) = NORMAL MODE (0) MEMORY LENGTH (JSDC00SW8FT3K) = _____ START ADDRESS (JSDC00SW8FT4K) = _____ GMT _____:_____:_____ (DAY:HR:MIN)	

RELEASED - Printed documents may be obsolete; validate prior to use.

SECTION IV - OPERATION INSTRUCTIONS

SEQ/STEP	CMD	RESP	DESCRIPTION	VERIF.

NOTE

PERFORM THE FOLLOWING STEP TO PERFORM SETUP PIPE FOR A MEMORY DUMP OF JCP-A WHEN JCP-A IS PRIMARY. NOTE THAT THE JCP MEMORY DUMP SUBADDRESSES ARE TRANSMIT 24, 25, AND 26.

12-003 KCDH SSFE CES MATE
LOAD AND RUN MATE SCRIPT
MEIT3_MATE_CMDS
INDEX 0X00E2
SETUP DUMP PIPE FROM C&C TO JCP MDM
LADD96IM0844K
PRIM_CCS_SETUP_DATA_DUMP_TMPLT (LADP01MDC025L)
LADP01MD0601K BUS ID = CB EXT-1 (4)
LADP01MD0602K DUMP TYPE = NORMAL (0)
LADP01MD0603K REMOTE TERMINAL = 19
LADP01MD0604K SUBADDRESS = 24
LADP01MD0605K BIA SUBADDRESS = 32

GMT _____:_____:_____ (DAY:HR:MIN)

NOT PERFORMED:_____

RELEASED - Printed documents may be obsolete; validate prior to use.

SECTION IV - OPERATION INSTRUCTIONS

SEQ/STEP	CMD	RESP	DESCRIPTION	VERIF.

NOTE

PERFORM THE FOLLOWING STEP TO PERFORM A MEMORY DUMP OF JCP-B WHEN JCP-B IS PRIMARY. NOTE THAT THE JCP MEMORY DUMP SUB ADDRESSES ARE TRANSMIT 24, 25, AND 26.

12-004 KCDH SSFE CES MATE
LOAD AND RUN MATE SCRIPT
MEIT3_MATE_CMDS
INDEX 0X00E3
SETUP DUMP PIPE FROM C&C TO JCP MDM
LADD96IM0844K
PRIM_CCS_SETUP_DATA_DUMP_TMPLT (LADP01MDC025L)
LADP01MD0601K BUS ID = CB EXT-2 (3)
LADP01MD0602K DUMP TYPE = NORMAL (0)
LADP01MD0603K REMOTE TERMINAL = 19
LADP01MD0604K SUBADDRESS = 24
LADP01MD0605K BIA SUBADDRESS = 32

GMT _____:_____:_____ (DAY:HR:MIN)

NOT PERFORMED:_____

NOTE

ALLOW THE MEMORY DUMP TO RUN UNTIL THE COMPLETE MEMORY RANGE HAS BEEN DUMPED.

RELEASED - Printed documents may be obsolete; validate prior to use.

SECTION IV - OPERATION INSTRUCTIONS

SEQ/STEP	CMD	RESP	DESCRIPTION	VERIF.
12-005	KCDH	SSFE	CES MATE LOAD AND RUN MATE SCRIPT MEIT3_MATE_CMDS INDEX: 0X013C RE-ESTABLISH CPU UTILIZATION DUMP MDM:C&C ADDRESS:0X7DD138 GMT _____:_____:_____ (DAY:HR:MIN)	
12-006	KCDH	SSFE	CES MATE LOAD AND RUN MATE SCRIPT MEIT3_MATE_CMDS INDEX: 0X012A CMD: C&C MDM TO JCP TERMINATE TRANSFER PUI: JSDC00SW5FT0L PARAMETER 1 (CHANNEL KEY): 0 GMT _____:_____:_____(HR:MIN:SEC)	
12-007	KCDH PTC 052	PTC DKQM	FLIGHT MEMORY DATA DUMP FROM PRIMARY JCP COMPLETE. GMT _____:_____:_____ (DAY:HR:MIN)	

NV:_____

RELEASED - Printed documents may be obsolete; validate prior to use.

SECTION IV - OPERATION INSTRUCTIONS

SEQ/STEP	CMD	RESP	DESCRIPTION	VERIF.
13-000			**FLIGHT MEMORY DATA DUMP FROM MDP**	
13-001	PTC	DKQM	RECORD THE FOLLOWING INFORMATION: PROCEDURE/SEQ/STEP THAT CALLED THIS INSTRUCTION _____ GMT _____:_____:_____ (DAY:HR:MIN)	
				NV:_____

RELEASED - Printed documents may be obsolete; validate prior to use.

SECTION IV - OPERATION INSTRUCTIONS

SEQ/STEP	CMD	RESP	DESCRIPTION	VERIF.
			NOTE THE MEMORY DUMP COMMAND TO THE MDP SHOULD BE PERFORMED PRIOR TO THE SETUP PIPE TO ENSURE THAT THE DUMP HEADER IS VALID.	
			NOTE IN THE FOLLOWING STEP, THE MEMORY LENGTH IS IN BYTES, NOT WORDS AS FOR USOS MDMS. **MEMORY LENGTH SHALL BE AN INTEGRAL MULTIPLE OF 172 BYTES** (86 WORDS)(REFERENCE SSP 41151, TABLE D.3.3.2.3.4.2-1.)	
			NOTE FOR THE MDP, DO NOT DUMP MEMORY ACROSS THE ADDRESS 0X00128000. IF THOSE ADDRESSES ARE NEEDED, PERFORM ONE MEMORY DUMP FOR ADDRESSES LESS THAN 0X00128000, AND A SECOND MEMORY DUMP FOR ADDRESSES 0X00128000 AND HIGHER. ALSO, THE FOLLOWING MEMORY ADDRESSES ARE RESTRICTED. ENSURE THAT THESE ADDRESSES ARE NOT INCLUDED IN THE RANGE OF THE REQUESTED MEMORY DUMP. 0X0011FFF8 THROUGH 0X0011FFFF 0X00247FF8 THROUGH 0X00247FFF	
13-002	KCDH	SSFE	CES MATE SELECT FROM DATABASE: JRRC00SW8FT0L C&C MDM TO MDP MEMORY DUMP START COMMAND (JRDD96IM0001K, JEM_RMS_C&C_MDM_TO_MDP _MEMORY_DUMP_START_CMD_TMPLT) BC SUBADDRESS (JSDC00SW8FT1K) = 24 MEMORY TYPE (JSDC00SW8FT2K) = RAM (0) DUMP TYPE (JSDC00SW7FT2K) = NORMAL (0) DUMP MODE (JSDC00SW8FT5K) = NORMAL MODE (0) MEMORY LENGTH (JSDC00SW8FT3K) = _____ START ADDRESS (JSDC00SW8FT4K) = _____ GMT _____:_____:_____ (DAY:HR:MIN)	

RELEASED - Printed documents may be obsolete; validate prior to use.

SECTION IV - OPERATION INSTRUCTIONS

SEQ/STEP	CMD	RESP	DESCRIPTION	VERIF.

NOTE

THE FOLLOWING STEP SETS UP THE DUMP PIPE BETWEEN THE C&C AND THE MDP. NOTE THAT THE RMS MDP MEMORY DUMP SUB ADDRESSES ARE TRANSMIT 24, 25, AND 26.

13-003 KCDH SSFE CES MATE
LOAD AND RUN MATE SCRIPT
MEIT3_MATE_CMDS
INDEX 0X00E4
SETUP DUMP PIPE FROM C&C TO RMS MDP
LADD96IM0844K
PRIM_CCS_SETUP_DATA_DUMP_TMPLT (LADP01MDC025L)
LADP01MD0601K BUS ID = CB EXT-2 (3)
LADP01MD0602K DUMP TYPE = NORMAL (0)
LADP01MD0603K REMOTE TERMINAL = 16
LADP01MD0604K SUBADDRESS = 24
LADP01MD0605K BIA SUBADDRESS = 32

GMT _____:_____:_____ (DAY:HR:MIN)

NOTE

ALLOW THE MEMORY DUMP TO RUN UNTIL THE COMPLETE MEMORY RANGE HAS BEEN DUMPED.

13-004 KCDH SSFE CES MATE
LOAD AND RUN MATE SCRIPT
MEIT3_MATE_CMDS
INDEX: 0X013C
RE-ESTABLISH CPU UTILIZATION DUMP
MDM:C&C
ADDRESS:0X7DD138

GMT _____:_____:_____ (DAY:HR:MIN)

13-005 KCDH SSFE MATE
LOAD AND RUN MATE SCRIPT
MEIT3_MATE_CMDS
INDEX **0X012B**

CMD: C&C MDM to MDP Terminate Transfer
(APID 31, From MCC-H to JEM_RMS)
PUI: JRRC00SW5FT0L
PARAMETER 1 (CHANNEL KEY) : 0

GMT _____:_____:_____(HR:MIN:SEC)

RELEASED - Printed documents may be obsolete; validate prior to use.

SECTION IV - OPERATION INSTRUCTIONS

SEQ/STEP	CMD	RESP	DESCRIPTION	VERIF.
13-006	KCDH PTC 052	PTC DKQM	FLIGHT MEMORY DATA DUMP FROM MDP COMPLETE. GMT _____:_____:_____ (DAY:HR:MIN)	
				NV:_____

RELEASED - Printed documents may be obsolete; validate prior to use.

SECTION IV - OPERATION INSTRUCTIONS

SEQ/STEP	CMD	RESP	DESCRIPTION	VERIF.
14-000			**RESERVED**	

RELEASED - Printed documents may be obsolete; validate prior to use.

SECTION IV - OPERATION INSTRUCTIONS

SEQ/STEP	CMD	RESP	DESCRIPTION	VERIF.
15-000			**JEM COMMON ACTIVATION (JCP-A PRIMARY)**	
15-001	PTC	DKQM	RECORD THE FOLLOWING INFORMATION: PROCEDURE/SEQ/STEP THAT CALLED THIS INSTRUCTION _____ GMT _____:_____:_____ (DAY:HR:MIN)	NV:_____
			NOTE VERIFICATION OF I/0 AND FDIR INHIBITS CAN BE PERFORMED IN PARALLEL WITH TCS VALVE RECONFIGURATION.	
			NOTE PERFORM THE NEXT TWO STEPS TO RECONFIGURE TO 2WCL.	
15-002	KTCS TLM	TLM MJ1	MANUALLY CONFIGURE JLCV-A TO 2WCL POSITION	T:_____
15-003	KTCS TLM	TLM MJ1	MANUALLY CONFIGURE JLCV-B TO 2WCL POSITION	T:_____
				NOT PERFORMED:_____ (PREVIOUS 2 STEPS)

RELEASED - Printed documents may be obsolete; validate prior to use.

SECTION IV - OPERATION INSTRUCTIONS

SEQ/STEP	CMD	RESP	DESCRIPTION	VERIF.
			NOTE PERFORM THE FOLLOWING STEP IF JEM GSE COOLING HAS NOT BEEN ACTIVATED.	
15-004	PTC	KTCS DKQM	PERFORM DAILY TCS GSE ACTIVATION PER R0031V1 SEQUENCE 17 AND REPORT COMPLETE. START GMT _____:_____:_____ (DAY:HR:MIN) COMPLETE GMT _____:_____:_____ (DAY:HR:MIN) NV:_____ NOT PERFORMED:_____	
15-005	KCDH		TCMS LOAD E_M3_PRE_JCP_DIU_EPS1	
15-006	KCDH	MS1	VERIFY USOS PCS CONNECTED TO JEM UOP UOP-A3-FD6 (J3).	
			VERIFY JEM EXT-2 RT FDIR INHIBITS	
15-007	KCDH		TCMS (DMON) VERIFY RT FDIR STATUS – TRUE (INH) 15 ACBM-JS _____ PUI: LADP01MDAVV6J 16 MDP _____ PUI: LADP01MDAVVFJ 18 DIU-EPS-2 _____ PUI: LADP01MDAVUXJ 19 JCP-B _____ PUI: LADP01MDAVUOJ	
			VERIFY JEM EXT-1 RT FDIR INHIBITS	
15-008	KCDH		TCMS(DMON) VERIFY: RT FDIR STATUS – TRUE (INH) RT 15 ACBM-JP _____ PUI: LADP01MDAVXFJ RT 18 DIU-EPS-1 _____ PUI: LADP01MDAVX6J RT 19 JCP-A _____ PUI: LADP01MDAVWXJ	

RELEASED - Printed documents may be obsolete; validate prior to use.

SECTION IV - OPERATION INSTRUCTIONS

SEQ/STEP	CMD	RESP	DESCRIPTION	VERIF.
			VERIFY JEM EXT –2 RT – I/O INHIBITIS	
15-009	KCDH		TCMS (DMON) VERIFY: RT STATUS I/O – FALSE (INH) 15 ACBM-JS _____ PUI: LADP01MDAVV2J 16 MDP _____ PUI: LADP01MDAVVBJ 18 DIU-EPS-2 _____ PUI: LADP01MDAVUTJ 19 JCP-B _____ PUI: LADP01MDAVUKJ	
15-010	KCDH		TCMS: (DMON) VERIFY RT STATUS I/O – FALSE (INH) RT 15 ACBM-JP _____ PUI: LADP01MDAVXBJ RT 18 DIU-EPS-1 _____ PUI: LADP01MDAVX2J RT 19 JCP-A _____ PUI: LADP01MDAVWTJ	
15-011	PTC	ALL	VERIFY READY TO PROCEED WITH JEM A STRING SYSTEMS ACTIVATION **NOTE** ONCE THE ISOLATION SWITCH IS CLOSED THE FOLLOWING BOXES WILL HAVE POWER APPLIED: PDU-B1, PDU-B2, PDB-EPS2, DIU EPS2, DIU-B1, PIB-B1.	
15-012	KEPS	DET1 DKQN	CLOSE EPS MANUAL SWITCH FOR JEM A POWER STRING	

TQW:_____

RELEASED - Printed documents may be obsolete; validate prior to use.

SECTION IV - OPERATION INSTRUCTIONS

SEQ/STEP	CMD	RESP	DESCRIPTION	VERIF.
			ENABLE COMM BETWEEN C&C MDM AND DIU-EPS-A	
15-013	KCDH	SSFE	CES MATE LOAD AND RUN MATE SCRIPT MEIT3_MATE_ACT_CMDS INDEX: 0X0042 OPS NAME: PRIM_CCS_ENA_RT_TMPLT PUI: LADD96IM1018K PARAMETER 1: CB-EXT-1 PARAMETER 2: RT 18 EXECUTE GMT _____:_____:_____ (DAY:HR:MIN)	
15-014	KCDH		TCMS VERIFY: DIU-EPS1 RT I/0 – TRUE (ENA) PUI:LADP01MDAVX2J	
15-015	KCDH	SSFE	CES MATE 'JEM A COMMON ACT' LOAD AND RUN MATE SCRIPT MEIT3_MATE_ACT_CMDS INDEX: 0X003A CMD:PRIM_CCS_ENA_RT_FDIR_TMPLT_ PUI: LADD96IM0769K PARAMETER: CB-EXT-1 PARAMETER: RT-18 EXECUTE GMT _____:_____:_____(HR:MIN:SEC)	
15-016	KCDH		TCMS (DMON) VERIFY: RT FDIR RT 18 – FALSE (ENA) PUI: LADP01MDAVUXJ	

RELEASED - Printed documents may be obsolete; validate prior to use.

SECTION IV - OPERATION INSTRUCTIONS

SEQ/STEP	CMD	RESP	DESCRIPTION	VERIF.
15-017	KCDH		TCMS (ACTIVATION STR A:DIU EPS1) VERIFY: 'DIU FRAME' 1. ENG: DIU-III-A STATUS/DISCRETE INPUT DATA FRAME TIME TAG – "INCREMENTING" PUI: JMDC03FC0011W 2. BIT STATUS - VALID ENG: EPS_RACK1_DIU BIT STATUS [ACT] PUI: JMDC03FCA10EJ 3. BIT RESULTS- NORMAL ENG:EPS_RACK1_DIU BIT RESULT [ACT] – NORMAL PUI: JMDC03FCA10FJ 4. HEALTH STATUS SUMM - NORMAL ENG: EPS_RACK1_DIU HEALTH STATUS SUMMARY [ACT] PUI: JMDC03FCA100J **ESTABLISH COMM BETWEEN DIU-EPS-A AND PDU-A1**	
15-018	KEPS	SSFE	CES MATE LOAD AND RUN MATE SCRIPT MEIT3_MATE_ACT_CMDS INDEX: 0X0005 OPS NAME: JPM_CDH_DIU_A4/PDU_A1_(RS422_CH5)_COMM_START_(ACT) PUI: LADD96IM1070K EXECUTE GMT _____:_____:_____ (DAY:HR:MIN)	

RELEASED - Printed documents may be obsolete; validate prior to use.

SECTION IV - OPERATION INSTRUCTIONS

SEQ/STEP	CMD	RESP	DESCRIPTION	VERIF.
15-019	KEPS		TCMS PRE-JCP:SLB1_A JPM EPS SYS LOC BUS1:AV STR A 'PDU A1' VERIFY: 1. DATA FRAME TIME TAG – "INCREMENTING" ENG: SYS_PDU_A DATA FRAME TIME TAG PUI: JMDC03FC0081W 2. HEALTH STATUS SUMMARY - NORMAL ENG:SYS_PDU_A HEALTH STATUS SUMMARY [ACT] PUI: JMDC03FCPH00J 3. 'PDU_A1' – BACKGROUND 'GREEN' ENG: SYS_PDU_A RPC4 PWR STATUS [ACT] PUI: JMDC03FCPH0JJ RECORD: 4. INPUT VOLTAGE (RPC1-7) _____ (BD) ENG: SYS{PDU_A_RPC(1-7)INPUT VOLTAGE [ACT] PUI: JMDC03FCPH1ZV 5. INPUT VOLTAGE (RPC8-14) _____ (BD) ENG: SYS{PDU_A_RPC(8-14)INPUT VOLTAGE [ACT] PUI: JMDC03FCPH20V	

RELEASED - Printed documents may be obsolete; validate prior to use.

SECTION IV - OPERATION INSTRUCTIONS

SEQ/STEP	CMD	RESP	DESCRIPTION	VERIF.
			ESTABLISH COMM BETWEEN DIU-EPS-A AND PIB-A1	
15-020	KCDH	SSFE	CES MATE: LOAD AND RUN MATE SCRIPT MEIT3_MATE_ACT_CMDS INDEX: 0X0001 CMD:JPM_CDH_DIU_A4/PIB_A1_(RS422_CH3)_COMM_START_(ACT) PUI: LADD96IM1067K EXECUTE GMT _____:_____:_____(HR:MIN:SEC)	
15-021	KCDH		TCMS VERIFY: 1. PIB_A1 BIT STATUS [ACT]– VALID ENG: PIB_A1 BIT STATUS [ACT]– PUI: JMDC03FCPC39J 2. PIB_A1 BIT RESULT [ACT]- NORMAL ENG: PIB_A1 BIT RESULT [ACT] PUI: JMDC03FCPC3AJ 3. PIB_A1 HEALTH STATUS SUMMARY [ACT] - NORMAL ENG: PIB_A1 HEALTH STATUS SUMMARY [ACT] PUI: JMDC03FCPC00J	
15-022	PTC	KEPS	PERFORM JEM UOP PANEL ACTIVATION PER OMI R2009 SEQUENCE 03 OPTION C REPORT COMPLETE. START GMT _____:_____:_____ (DAY:HR:MIN) COMPLETE GMT _____:_____:_____ (DAY:HR:MIN)	NV:_____
15-023	PTC	KCDH	PERFORM SLT ACTIVATION PER OMI R2009 SEQUENCE 05. REPORT COMPLETE. START GMT _____:_____:_____ (DAY:HR:MIN) COMPLETE GMT _____:_____:_____ (DAY:HR:MIN)	NV:_____

RELEASED - Printed documents may be obsolete; validate prior to use.

SECTION IV - OPERATION INSTRUCTIONS

SEQ/STEP	CMD	RESP	DESCRIPTION	VERIF.
			PRIMARY JCP-A ACTIVATION	
			NOTE THE FOLLOWING STEP WILL RESULT IN THE C&W MESSAGE “CDH PRIMARY JEM CONTROL PROCESSOR FAIL – JEM” ON PCS.	
			ENABLE COMM BETWEEN JCP A AND C&C MDM	
15-024	KCDH	SSFE	CES MATE: LOAD AND RUN MATE SCRIPT MEIT3_MATE_ACT_CMDS INDEX: 0X0043 CMD PRIM_CCS_ENA_RT_TMPLT PUI: LADD96IM1018K PARAMETER 1: CB-EXT-1 PARAMETER 2: RT- 19 EXECUTE GMT _____:_____:_____(HR:MIN:SEC)	
15-025	KCDH		TCMS: VERIFY: JCP-A RT I/O – TRUE(ENA) PUI: LADP01MDAVWTJ	

RELEASED - Printed documents may be obsolete; validate prior to use.

SECTION IV - OPERATION INSTRUCTIONS

SEQ/STEP	CMD	RESP	DESCRIPTION	VERIF.
			NOTE UPON ACTIVATION OF PDB DMS1, JCP- A ACTIVATES AUTMATICALLY	
			NOTE WHEN JCP IS ACTIVATED, JCP WILL AUTOMATICALLY ESTABLISH SAMPLING WITH TCA_L. SINCE TCA_L IS POWERED OFF, THIS WILL CAUSE DIU_EPS_1 HEALTH STATUS SUMMARY TO INDICATE “ERROR”.	
15-026	KCDH	SSFE	CES MATE: LOAD AND RUN MATE SCRIPT MEIT3_MATE_ACT_CMDS INDEX: 0X0025 CMD:JPM_EPS_PDU_A1_RPC10_(PDB_A_DMS1)_CL_(ACT) PUI: LAPX96IM0370K EXECUTE: GMT _____:_____:_____(HR:MIN:SEC)	
15-027	KCDH		TCMS (SYSTEM LOCAL BUS (SLB) 1 FOR ACTIVATION OF A-STRING AVIONICS PRIMARY) VERIFY: ‘PDB_DMS_1’ – BACKGROUND ‘GREEN’ SYS_PDU_A RPC10 POWER STATUS [ACT] – CL (ON) ENG: SYS_PDU_A RPC10 POWER STATUS [ACT] PUI: JMDC03FCPH0PJ	

RELEASED - Printed documents may be obsolete; validate prior to use.

SECTION IV - OPERATION INSTRUCTIONS

SEQ/STEP	CMD	RESP	DESCRIPTION	VERIF.

NOTE

JCP A TAKES BETWEEN 5.5 AND 10 MINUTES TO INITIALIZE DEPENDING ON FILE CONFIGURATION. STEPS TO ESTABLISH COMMUNICATION BETWEEN C&C MDM AND JCP A CAN BE PERFORMED IMMEDIATELY AFTER VERIFICATION OF THE FOLLOWING STEPS

NOTE

AFTER JCP-A INT PWR SWITCH IS CLOSED, THE JCP A INITIATES A SELF TEST (BIT) WHICH TAKES APPROXIMATELY 60 SECONDS TO COMPLETE. DURING THE BIT, THE JCP A FATAL ERR WILL INDICATE “YES” . AFTER THE BIT IS COMPLETE, THE FATAL ERROR WILL RETURN TO “NO” DEPENDING ON TIMING OF THE RT I/O ENABLE COMMAND BETWEEN THE C&C AND JCP THIS FATAL ERROR MAY BE MONITORED.

VERIFY JCP A STATUS

15-028 KCDH

TCMS
VERIFY:

1. JCP_A SECONDARY POWER STATUS [ACT] - CL (ON)
   ENG: JCP_A SECONDARY POWER STATUS [ACT]
   PUI: JMDC03FCZA04J

2. JCP_A FAULT SIGNAL[ACT] - NORMAL
   ENG: JCP_A FAULT SIGNAL[ACT]
   PUI: JMDC03FCZA03J

RELEASED - Printed documents may be obsolete; validate prior to use.

SECTION IV - OPERATION INSTRUCTIONS

SEQ/STEP	CMD	RESP	DESCRIPTION	VERIF.
			CHECKOUT JCP A	
15-029	KCDH		TCMS (JPM ACTIVE JCP INFORMATION) VERIFY: 'ACTIVE JCP' FRAME COUNTER - "INCREMENTING" ENG: FRAME COUNTER PUI: JSDC00SWZ999U	
15-030	KCDH		TCMS (FAS MESSAGE LOG) VERIFY JCP FAS MSG – FAS SERVICE STARTED (8) ENG: MESSAGE ID BOX (TO SS PCS) 1, 2, OR 3 PUI: JSDC00SWZ621J	
			ENABLE BUS FDIR BETWEEN C&C MDM AND JCP A	
15-031	KCDH	SSFE	CES MATE: LOAD AND RUN MATE SCRIPT MEIT3_MATE_CMDS INDEX: 0X00D6 OPS NAME:: PRIM_CCS_ENA_RT_FDIR_TMPLT PUI: LADD96IM0769K PARAMETER 1: CB-EXT-1 PARAMETER 2: RT-19 EXECUTE: GMT _____:_____:_____ (DAY:HR:MIN)	
15-032	KCDH		TCMS VERIFY: RT 19 FDIR – FALSE(ENA) PUI: LADP01MDAVWXJ	
			INHIBIT COMMAND RECEIVED BETWEEN C&C AND DIU-EPS1	
15-033	KCDH	SSFE	CES MATE: LOAD AND RUN MATE SCRIPT MEIT3_MATE_CMDS INDEX: 0X0009 CMD: JPM_CDH_DIU_A4_CMD_RCV_FROM_C&C_MDM_INH PUI: JSDD96IM0005K EXECUTE GMT _____:_____:_____(HR:MIN:SEC)	

RELEASED - Printed documents may be obsolete; validate prior to use.

SECTION IV - OPERATION INSTRUCTIONS

SEQ/STEP	CMD	RESP	DESCRIPTION	VERIF.
15-034	KCDH		TCMS VERIFY: EPS_RACK1_DIU MDM COMMAND INHIBIT FLAG - INHIBIT ENG: EPS_RACK1_DIU MDM COMMAND INHIBIT FLAG PUI: JSDC00FCA11QJ **INHIBIT FDIR BETWEEN DIU-EPS-1 AND C&C MDM**	
15-035	KCDH	SSFE	CES MATE: LOAD AND RUN MATE SCRIPT MEIT3_MATE_CMDS INDEX: 0X00DC CMD PRIM_CCS_INH_RT_FDIR_TMPLT PUI: LADD96IM0770K PARAMETER 1: CB-EXT-1 PARAMETER 2: RT-18 EXECUTE GMT _____:_____:_____(HR:MIN:SEC)	
15-036	KCDH		TCMS VERIFY: RT FDIR FOR RT 18 – TRUE(INH) PUI: LADP01MDAVX6J **INHIBIT COMM BETWEEN DIU-EPS1 AND C&C MDM**	
15-037	KCDH	SSFE	CES MATE: LOAD AND RUN MATE SCRIPT MEIT3_MATE_CMDS INDEX: 0X00EF CMD PRIM_CCS_INH_RT_TMPLT PUI: LADD96IM1019K PARAMETER 1: CB-EXT-1 PARAMETER 2: RT- 18 EXECUTE GMT _____:_____:_____(HR:MIN:SEC)	

RELEASED - Printed documents may be obsolete; validate prior to use.

SECTION IV - OPERATION INSTRUCTIONS

SEQ/STEP	CMD	RESP	DESCRIPTION	VERIF.
15-038	KCDH		TCMS VERIFY: RT STATUS FOR RT 18 – FALSE(INH) PUI: LADP01MDAVX2J	
			NOTE [ACT] PUIS FOR ALL JEM CMDS AND TELEMETRY AFTER THIS POINT ARE NO LONGER VALID.	
			INHIBIT ALL EVENT CHECK AND AUTO_FUNCTION	
15-039	KCDH	SSFE	CES MATE: 'JEM A COMMON ACT' LOAD AND RUN MATE SCRIPT MEIT3_MATE_CMDS INDEX: 0X0125 CMD: JPM_CDH_ACTIVE_JCP_FAS_AUTO_PROC_INH_TMPLT PUI: JSDD96IM0225K PARAMETER 1 (AUTO FUNCTION ID): 98 (AUTOMATED FUNCTION INHIBIT FLAG(STOP_DUMP_PM)) GMT _____:_____:_____(HR:MIN:SEC)	
15-040	KCDH		TCMS VERIFY: AUTOMATED FUNCTION INHIBIT FLAG - INHIBIT ENG: AUTOMATED FUNCTION INHIBIT FLAG (STOP_DUMP_PM) - INH PUI: JSDC00SWZ42OJ	
15-041	KCDH		CES MATE: 'JEM A COMMON ACT' LOAD AND RUN MATE SCRIPT MEIT3_MATE_CMDS INDEX: 0X0126 CMD:JPM_CDH_ACTIVE_JCP_FAS_AUTO_PROC_INH_TMPLT PUI: JSDD96IM0225K PARAMETER 1 (AUTO FUNCTION ID): 99 (AUTOMATED FUNCTION INHIBIT FLAG(STOP_DUMP_ELM)) GMT _____:_____:_____(HR:MIN:SEC)	
15-042	KCDH		TCMS AUTOMATED FUNCTION INHIBIT FLAG - INHIBIT ENG: AUTOMATED FUNCTION INHIBIT FLAG (STOP_DUMP_ELM) - INH PUI: JSDC00SWZ42KJ	

RELEASED - Printed documents may be obsolete; validate prior to use.

SECTION IV - OPERATION INSTRUCTIONS

SEQ/STEP	CMD	RESP	DESCRIPTION	VERIF.
15-043	KCDH		TCMS (DIU_EPS1) 'DIU BIT' HEALTH SUM – ERROR ENG: EPS_RACK1_DIU HEALTH STATUS SUMMARY PUI: JSDC00FCA100J **NOTE** COMMUNICATION IS AUTOMATICALLY ESTABLISHED BETWEEN DIU EPS 1 AND TAC L. TAC L IS NOT ACTIVE PER THE COMMON ACTIVATION SO COMMUNICATION MUST BE INHIBITED TO ELIMINATE UNWANTED ERROR INDICATIONS.	
15-044	KCDH	SSFE	CES MATE: 'JEM A COMMON ACT' LOAD AND RUN MATE SCRIPT MEIT3_MATE_CMDS INDEX: 0X0038 CMD: JPM_CDH_DIU/ORU_(RS422)_COMM_STOP_TMPLT PUI: JSDD96IM0036K PARAMETER 1: 4 (DIU_EPS_1) PARAMETER 2: 6 (TAC_L) GMT _____:_____:_____(HR:MIN:SEC)	
15-045	KCDH		TCMS (DIU EPS 1) VERIFY: HEALTH SUMM – NORMAL ENG: EPS_RACK1_DIU HEALTH STATUS SUMMARY PUI: JSDC00FCA100J	

RELEASED - Printed documents may be obsolete; validate prior to use.

SECTION IV - OPERATION INSTRUCTIONS

SEQ/STEP	CMD	RESP	DESCRIPTION	VERIF.

NOTE

COMMUNICATION IS AUTOMATICALLY ESTABLISHED BETWEEN DIU A1 AND THCU_A. THCU_A IS NOT ACTIVE PER THE COMMON ACTIVATION SO COMMUNICATION MUST BE INHIBITED TO ELIMINATE UNWANTED ERROR INDICATIONS.

15-046 KCDH SSFE CES MATE:
'JEM A COMMON ACT'

LOAD AND RUN MATE SCRIPT
MEIT3_MATE_CMDS
INDEX: 0X000C

CMD: JPM_CDH_DIU/ORU_(RS422)_COMM_STOP_TMPLT
PUI: JSDD96IM0036K
PARAMETER 1: 6 (DIU_A1)
PARAMETER 2: 1 (THCU_A)

GMT _____:_____:_____(HR:MIN:SEC)

15-047 KCDH TCMS(JPM/ DIU A1)
RECORD :

'DIU BIT'

HEALTH STATUS SUMM - _____(BD)
ENG: DIU_A1 HEALTH STATUS SUMMARY
PUI: JSDC00FCD000J

DIU-A1 COMMUNICATION ERROR EVENT ENABLE VERIFICATION

15-048 KCDH SSFE TCMS
JPM:DIU A1
'DIU EVENT INHIBIT FLAG'

VERIFY:
DIU COMM ERR – ENA

ENG: EVENT INHIBIT FLAG (DIU_A1 COMMUNICATION ERROR)
PUI: JSDC00SWZ31MJ

RELEASED - Printed documents may be obsolete; validate prior to use.

SECTION IV - OPERATION INSTRUCTIONS

SEQ/STEP	CMD	RESP	DESCRIPTION	VERIF.
			VERIFY DIU_A1 STATUS	
			NOTE DIU A1 WAS ACTIVATED AUTOMATICALLY DURING JEM INITIAL ACTIVATION, BUT COMMUNICATION WAS NOT ESTABLISHED UNTIL JCP-A ACTIVATION.	
15-049	KCDH		TCMS VERIFY 1. DIU_A1 BIT STATUS - VALID ENG:DIU_A1 BIT STATUS PUI: JSDC00FCD00EJ 2. DIU_A1 BIT RESULT- NORMAL ENG:DIU_A1 BIT RESULT PUI: JSDC00FCD00FJ 3. HEALTH STATUS SUMM –NORMAL ENG: DIU_A1 HEALTH STATUS SUMMARY PUI: JSDC00FCD000J	
			VERIFY PDU-A2 STATUS	
			NOTE PDU-A2 WAS ACTIVATED AUTOMATICALLY DURING JEM INITIAL ACTIVATION, BUT COMMUNICATION WAS NOT ESTABLISHED UNTIL DIU-A1 COMMUNICATION WAS ESTABLISHED.	
15-050	KEPS		TCMS PDU A2:JPM EPS PDU A2 VERIFY: 1. DATA FRAME STATUS – CURRENT ENG: PDU_PL_A DF STAT PUI: JSDC00SWPF30J 2. HEALTH STATUS SUMMARY – N0RMAL ENG: PL_PDU_A HEALTH STATUS SUMMARY PUI: JSDC00FCPF00J	

RELEASED - Printed documents may be obsolete; validate prior to use.

SECTION IV - OPERATION INSTRUCTIONS

SEQ/STEP	CMD	RESP	DESCRIPTION	VERIF.
15-051	KEPS		TCMS PDU A2:JPM EPS PDU A2 RECORD 1. JRPCM1 INPUT VOLTAGE _____ (BD) ENG: PL_PDU_A RPCM(RPC1-7) INPUT VOLTAGE PUI: JSDC00FCPF1XV 2. JRPCM2 INPUT VOLTAGE _____ (BD) ENG: PL_PDU_A RPCM (RPC8-14) INPUT VOLTAGE PUI: JSDC00FCPF1YV **VERIFY PDB-DMS1 STATUS** **NOTE** PDB-DMS WAS ACTIVATED PRIOR TO JCP BUT COMMUNICATION WAS NOT ESTABLISHED UNTIL JCP A ACTIVATION COMPLETE.	
15-052	KEPS		TCMS PDB DMS1:JPM EPS PDB DMS1 VERIFY: 1. DATA FRAME STATUS- CURRENT ENG: PDB_DMS1_DF_STATUS PUI: JSDC00SWP520J 2. HEALTH STATUS SUMMARY – NORMAL ENG: PDB_DMS1 HEALTH STATUS SUMMARY PUI: JSDC00FCP500J **ACTIVATE PDB-A2** **NOTE** PDB_A2 COMMUNICATION INTERFACE IS AUTOMATICALLY ESTABLISHED AFTER PDU_A1 RPC 11 IS CLOSED.	
15-053	KEPS	SSFE	CES MATE LOAD AND RUN MATE SCRIPT MEIT3_MATE_CMDS INDEX: 0X009F CMD: JPM_EPS_PDU_A1_RPC11_(PDB_A2)_CL PUI: JSPX96IM0747K GMT _____:_____:_____(HR:MIN:SEC)	

RELEASED - Printed documents may be obsolete; validate prior to use.

SECTION IV - OPERATION INSTRUCTIONS

SEQ/STEP	CMD	RESP	DESCRIPTION	VERIF.
15-054	KEPS		TCMS PDU A1:JPM EPS PDU A1 VERIFY: 1. PDU A1 RPC 11 POSN – CL ENG: SYS PDU_A_RPC11 POWER STATUS PUI: JSDC00FCPH0QJ 2. DATA FRAME STATUS – CURRENT ENG: PDB_A2 DF STATUS PUI: JSDC00SWP220J	
15-055	KEPS		TCMS PDB A2:JPM EPS PDB A2 1. VERIFY: HEALTH STATUS SUMMARY - NORMAL ENG: PDB_A2 HEALTH STATUS SUMMARY PUI: JSDC00FCP200J RECORD: 2. PDB_A2 INPUT VOLTAGE _____(BD) ENG: PDB_A2 INPUT VOLTAGE PUI: JSDC00FCP210V	

RELEASED - Printed documents may be obsolete; validate prior to use.

SECTION IV - OPERATION INSTRUCTIONS

SEQ/STEP	CMD	RESP	DESCRIPTION	VERIF.

NOTE

DIU A3 COMMUNICATION INTERFACE IS AUTOMATICALLY ESTABLISHED AFTER PDB A2 RPC 7 IS CLOSED

ACTIVATE DIU A3

15-056	KCDH	SSFE	CES MATE: LOAD AND RUN MATE SCRIPT MEIT3_MATE_CMDS INDEX: 0X0078 CMD:JPM_EPS_PDB_A2_RPC05_(DIU_A3_VLV) PUI: JSPX96IM0461K EXECUTE GMT _____:_____:_____(HR:MIN:SEC)
15-057	KCDH		TCMS VERIFY PDB_A2 RPC5 POWER STATUS – CL ENG: PDB_A2 RPC5 POWER STATUS PUI: JSDC00FCP20GJ
15-058	KCDH	SSFE	CES MATE: LOAD AND RUN MATE SCRIPT MEIT3_MATE_CMDS INDEX: 0X007A CMD: JPM_EPS_PDB_A2_RPC07_(DIU_A3_CNTLR) PUI: JSPX96IM0463K EXECUTE GMT _____:_____:_____(HR:MIN:SEC)
15-059	KCDH		TCMS VERIFY PDB_A2 RPC7 POWER STATUS – CL ENG: PDB_A2 RPC7 POWER STATUS PUI: JSDC00FCP20IJ

RELEASED - Printed documents may be obsolete; validate prior to use.

SECTION IV - OPERATION INSTRUCTIONS

SEQ/STEP	CMD	RESP	DESCRIPTION	VERIF.

NOTE

ALLOW 60 SECONDS FOR DIU_A3 INTERNAL BIT TO BE PREFORMED PRIOR TO VERIFICATION OF THE NEXT STEP.

VERIFY DIU A3 STATUS

15-060 KCDH

TCMS

VERIFY
1. HEALTH STATUS SUMMARY – NORMAL
   ENG: DIU_A3 HEALTH STATUS SUMMARY
   PUI: JSDC00FCD400J

2. DIU_A3 BIT STATUS – VALID
   ENG: DIU_A3 BIT STATUS
   PUI: JSDC00FCD40EJ

3. DIU_A3 BIT RESULT – NORMAL
   ENGR: DIU_A3 BIT RESULT
   PUI: JSDC00FCD40FJ

NOTE

DIU A2 COMMUNICATION INTERFACE IS AUTOMATICALLY ESTABLISHED AFTER PDB A2 RPC6 IS CLOSED

ACTIVATE DIU A2

15-061 KCDH SSFE

CES MATE:
LOAD AND RUN MATE SCRIPT
MEIT3_MATE_CMDS
INDEX: 0X0079

CMD: JPM_EPS_PDB_A2_RPC06_(DIU_A2_CNTLR)_CL
PUI: JSPX96IM0462K
EXECUTE

GMT _____:_____:_____(HR:MIN:SEC)

15-062 KCDH

TCMS

VERIFY:
PDB_A2 RPC6 POWER STATUS - CL
ENG: PDB_A2 RPC6 POWER STATUS
PUI: JSDC00FCP20HJ

RELEASED - Printed documents may be obsolete; validate prior to use.

SECTION IV - OPERATION INSTRUCTIONS

SEQ/STEP	CMD	RESP	DESCRIPTION	VERIF.

NOTE

ALLOW 60 SECONDS FOR DIU_A2 BIT TO COMPLETE PRIOR TO VERIFICATION OF THE NEXT STEP.

VERIFY DIU A2 STATUS

15-063 KCDH

TCMS

VERIFY

1. HEALTH STATUS SUMMARY - NORMAL
   ENG: DIU_A2 HEALTH STATUS SUMMARY
   PUI: JSDC00FCD200J

2. DIU_A2 BIT STATUS - VALID
   ENG:DIU_A2 BIT STATUS
   PUI: JSDC00FCD20EJ

3. DIU_A2 BIT RESULT - NORMAL
   ENG:DIU_A2 BIT RESULT
   PUI: JSDC00FCD20FJ

ESTABLISH COMM BETWEEN DIU A2 AND PDB EPS1

NOTE

PDB_EPS1 WAS ACTIVATED AUTOMATICALLY IN INITIAL ACTIVATION BUT COMMUNICATION IS ESTABLISHED AFTER DIU_A2 IS ACTIVATED. SO IT IS VERIFIED IN FINAL ACTIVATION.

15-064 KCDH SSFE

CES MATE:
LOAD AND RUN MATE SCRIPT
MEIT3_MATE_CMDS
INDEX: 0X0011

CMD: JPM_CDH_DIU/ORU_(RS422)_COMM_START_TMPLT
PARMETER 1: 7 (DIU A2)
PARAMETER 2: 3 (PDB –EPS1)
PUI: JSDD96IM0035K

EXECUTE

GMT _____:_____:_____(HR:MIN:SEC)

RELEASED - Printed documents may be obsolete; validate prior to use.

SECTION IV - OPERATION INSTRUCTIONS

SEQ/STEP	CMD	RESP	DESCRIPTION	VERIF.
15-065	KEPS		TCMS PDB EPS1:JPM PDB EPS1 VERIFY: 1. DATA FRAME STATUS – CURRENT ENG: PDB_EPS1_DF_STATUS PUI: JSDC00SWP720J 2. HEALTH SUMMARY STATUS - NORMAL ENG:PDB_EPS1 HEALTH STATUS SUMMARY PUI: JSDC00FCP700J RECORD: 3. PDB_EPS1 INPUT VOLTAGE _____(BD) ENG: PDB_EPS1 INPUT VOLTAGE PUI: JSDC00FCP710V **ACTIVATE PDB_A1**	
15-066	KCDH	SSFE	CES MATE: LOAD AND RUN MATE SCRIPT MEIT3_MATE_CMDS INDEX: 0X013C JPM_EPS_PDU_A1_RPC12_(PDB_A1)_CL PUI: JSFX96IM0748K EXECUTE GMT _____:_____:_____ (HR:MIN:SEC)	
15-067	KEPS		TCMS PDU A1:JPM EPS PDU_A1 VERIFY: PDU-A1 RPC12 (PDB A1) PWR STATUS – CL ENG: SYS_PDU_A RPC12 POWER STATUS PUI: JSDC00FCPH0RJ	
15-068	KEPS		TCMS PDB A1:JPM EPS PDB A1 VERIFY: 1. DATA FRAME STATUS – CURRENT ENG: PDB_A1 DF STATUS PUI: JSDC00SWP120J 2. HEALTH SUMMARY – NORMAL ENG: PDB_A1 HEALTH STATUS SUMMARY PUI: JSDC00FCP100J GMT _____:_____:_____(HR:MIN:SEC)	

RELEASED - Printed documents may be obsolete; validate prior to use.

SECTION IV - OPERATION INSTRUCTIONS

SEQ/STEP	CMD	RESP	DESCRIPTION	VERIF.
			ACTIVATE PIB_A2	
15-069	KEPS	SSFE	CES MATE LOAD AND RUN MATE SCRIPT MEIT3_MATE_CMDS INDEX: 0X0012C CMD:JPM_EPS_PDB_A2_RPC03_(PIB_A2)_CL PUI: JSPX96IM0459K EXECUTE GMT _____:_____:_____(HR:MIN:SEC)	
15-070	KEPS		TCMS PDB A2:JPM EPS PDB A2 VERIFY: PDB A2 RPC3 POSN – CL ENG:PDB_A2 RPC3 POWER STATUS PUI: JSDC00FCP20EJ	

RELEASED - Printed documents may be obsolete; validate prior to use.

SECTION IV - OPERATION INSTRUCTIONS

SEQ/STEP	CMD	RESP	DESCRIPTION	VERIF.
			VERIFY PIB_A2 STATUS	
15-071	KEPS		TCMS PIB A2:JPM EPS PIB A2 VERIFY: 1. BIT STATUS - VALID ENG: PIB_A2 BIT STATUS PUI: JSDC00FCPD39J 2. BIT RESULT – NORMAL ENG: PIB_A2 BIT RESULT PUI: JSDC00FCPD3AJ 3. HEALTH STATUS SUMMMARY - NORMAL ENG: PIB_A2 HEALTH STATUS SUMMARY PUI: JSDC00FCPD00J	
			ACTIVATE A-SIDE MTL DIFF PRESSURE SENSOR	
15-072	KTCS	SSFE	CES MATE LOAD AND RUN MATE SCRIPT MEIT3_MATE_CMDS INDEX: 0X00B9 CMD: JPM_EPS_PIB_A2_15V_SW09_(MTL_EQUIP_A_DP_SNSR_A)_ CL PUI: JSTE96IM0155K GMT _____:_____:_____(HR:MIN:SEC)	
15-073	KTCS		TCMS PIB A2:JPM EPS PIB A2 VERIFY: PIB A2 SW19 - CL ENG:PIB_A2 15V SW9 POWER STATUS PUI: JSDC00FCPD1WJ	
15-074	KTCS		TCMS RECORD LOOP DIFF PRESS A :_____(>51.6 KPA) ENG: MTL_DIFF_PRESS_A PUI: JSDC00FCT000P	

RELEASED - Printed documents may be obsolete; validate prior to use.

SECTION IV - OPERATION INSTRUCTIONS

SEQ/STEP	CMD	RESP	DESCRIPTION	VERIF.
			REACTIVATE PIB-A1(SET PIB-A1 LOAD LIMIT)	
15-075	KEPS	SSFE	CES MATE 'JEM A COMMON ACT' LOAD AND RUN MATE SCRIPT MEIT3_MATE_CMDS INDEX: 0X0012D CMD: JPM_EPS_PDB_A_EPS1_RPC03_(PIB_A1)_OP PUI: JSPX96IM0549K GMT _____:_____:_____(HR:MIN:SEC)	
15-076	KEPS		TCMS PDB EPS1:JPM EPS PDB EPS1 VERIFY: PDB EPS1 RPC3 PWR STATUS - OP ENG: PDB_EPS1 RPC3 POWER STATUS PUI: JSDC00FCP70EJ	
15-077	KEPS	SSFE	CES MATE 'JEM A COMMON ACT' LOAD AND RUN MATE SCRIPT MEIT3_MATE_CMDS INDEX: 0X0012E CMD: JPM_EPS_PDB_A_EPS1_RPC03_(PIB_A1)_CL PUI: JSPX96IM0537K GMT _____:_____:_____(HR:MIN:SEC)	

RELEASED - Printed documents may be obsolete; validate prior to use.

SECTION IV - OPERATION INSTRUCTIONS

SEQ/STEP	CMD	RESP	DESCRIPTION	VERIF.
15-078	KEPS		TCMS PDB:JEM PDB EPS1 VERIFY: PDB_EPS1 RPC3 POSN - CL ENG: PDB_EPS1 RPC3 POWER STATUS PUI: JSDC00FCP70EJ	
15-079	KCDH		TCMS VERIFY: 1. PIB_A1 BIT STATUS [ACT]– VALID ENG: PIB_A1 BIT STATUS [ACT]– PUI: JSDC00FCPC39J 2. PIB_A1 BIT RESULT [ACT]- NORMAL ENG: PIB_A1 BIT RESULT [ACT] PUI: JSDC00FCPC3AJ 3. PIB_A1 HEALTH STATUS SUMMARY [ACT] - NORMAL ENG: PIB_A1 HEALTH STATUS SUMMARY [ACT] PUI: JSDC00FCPC00J **ACTIVATE PDB WS**	
15-080	KEPS		CES MATE 'JEM A COMMON ACT' LOAD AND RUN MATE SCRIPT MEIT3_MATE_CMDS: INDEX: 0X0127 CMD: JPM_EPS_PDU_A1_RPC09_(PDB_A_WS)_CL PUI: JSPX96IM0745K GMT _____:_____:_____ (HR:MIN:SEC)	
15-081	KEPS		TCMS PDU A1:JPM EPS PDU A1 VERIFY: PDU A1 RPC9 PWR STATUS – CL ENG: SYS_PDU_A RPC 9 POWER STATUS PUI: JSDC00FCPH0OJ	

RELEASED - Printed documents may be obsolete; validate prior to use.

SECTION IV - OPERATION INSTRUCTIONS

SEQ/STEP	CMD	RESP	DESCRIPTION	VERIF.
15-082	PTC	ALL	VERIFY READY TO PROCEDURE WITH JEM B STRING SYSTEMS ACTIVATION	
			NOTE ONCE THE ISOLATION SWITCH IS CLOSED THE FOLLOWING BOXES WILL HAVE POWER APPLIED: PDU-A1, PDU-A2, PDB-EPS1, DIU-EPS-A, DIU-A1, PIB-A1.	
15-083	KEPS	DET1 DKQN	CLOSE EPS MANUAL SWITCH FOR JEM B POWER STRING	
				TNW:_____
			ACTIVATE JEM B STRING SYSTEM EQUIPMENT	
			NOTE ALLOW 60 SECONDS FROM EPS SWITCH CLOSURE FOR DIU_B1 TO COMPLETE INTERNAL BIT PRIOR TO VERIFICATION OF THE NEXT STEP.	
			INITIAL C&DH STATUS VERIFICATION	
			VERIFY DIU_EPS2 STATUS	
15-084	KCDH		TCMS VERIFY 1. BIT STATUS - VALID ENG: EPS_RACK2_DIU BIT STATUS PUI: JSDC00FCA60EJ 2. BIT RESULT - NORMAL ENG: EPS_RACK2_DIU BIT RESULT PUI: JSDC00FCA60FJ 3. HEALTH STATUS SUMMARY – NORMAL ENG: EPS_RACK2_DIU HEALTH STATUS SUMMARY PUI: JSDC00FCA600J	

RELEASED - Printed documents may be obsolete; validate prior to use.

SECTION IV - OPERATION INSTRUCTIONS

SEQ/STEP	CMD	RESP	DESCRIPTION	VERIF.
			VERIFY DIU_B1 STATUS	
15-085	KCDH		TCMS	
			VERIFY	
			1. BIT STATUS - VALID ENG: DIU_B1 BIT STATUS PUI: JSDC00FCD60EJ	
			2. BIT RESULT – NORMAL ENG: DIU_B1 BIT RESULT- NORMAL PUI: JSDC00FCD60FJ	
			3. HEALTH STATUS SUMMARY - NORMAL ENG: DIU_B1 HEALTH STATUS SUMMARY PUI: JSDC00FCD600J	
			ESTABLISH COMM BETWEEN DIU-EPS2 AND PDU_B1	
15-086	KEPS	SSFE	CES MATE: LOAD AND RUN MATE SCRIPT MEIT3_MATE_CMDS INDEX: 0X0028	
			CMD: JPM_CDH_DIU/ORU_(RS422)_COMM_START_TMPLT PUI: JSDD96IM0035K PARAMATER1: 5 (DIU–EPS2) PARAMETER2: 5 (SYS-PDU-B) EXECUTE	
			GMT _____:_____:_____(HR:MIN:SEC)	

RELEASED - Printed documents may be obsolete; validate prior to use.

SECTION IV - OPERATION INSTRUCTIONS

SEQ/STEP	CMD	RESP	DESCRIPTION	VERIF.
			VERIFY PDU_B1 STATUS	
15-087	KEPS		TCMS PDU B1:JPM EPS PDU B1 VERIFY: 1. DATA FRAME STATUS - CURRENT ENG:PDU_SYS_B_DF_STATUS PUI: JSDC00SWPI30J 2. HEALTH STATUS SUMMARY - NORMAL ENG: SYS_PDU_B HEALTH STATUS SUMMARY PUI: JSDC00FCPI00J RECORD: 3. JRPCM1 INPUT VOLTAGE _____ (BD) ENG: SYS_PDU_B_RPCM(RPC 1-7) INPUT VOLTAGE PUI: JSDC00FCPI1XV 4. JRPCM2 INPUT VOLTAGE _____ (BD) ENG: SYS_PDU_B_RPCM(RPC 8-14) INPUT VOLTAGE PUI: JSDC00FCPI1YV	
			ESTABLISH COMM BETWEEN DIU-EPS 2 AND PDU B2	
15-088	KCDH	SSFE	CES MATE: LOAD AND RUN MATE SCRIPT MEIT3_MATE_CMDS INDEX: 0X001C CMD: JPM_CDH_DIU/ORU_(RS422)_COMM_START_TMPLT. PUI: JSDD96IM0035K PARAMATER: 9 (DIU-B1) PARAMETER: 2 (PL_PDU_B) EXECUTE GMT _____:_____:_____(HR:MIN:SEC)	

RELEASED - Printed documents may be obsolete; validate prior to use.

SECTION IV - OPERATION INSTRUCTIONS

SEQ/STEP	CMD	RESP	DESCRIPTION	VERIF.
15-089	KEPS		TCMS: PDU B2:JPM EPS PDU B2 VERIFY: 1. HEALTH STATUS SUMMARY - NORMAL ENG: PL_PDU_B HEALTH STATUS SUMMARY PUI: JSDC00FCPG00J 2. DATA FRAME STATUS - CURRENT ENG: PDU_PL_B DF STATUS PUI: JSDC00SWPG30J RECORD: 3. RPCM (RPC1-7) INPUT VOLTAGE _____ (BD) ENG: PL_PDU_B_RPCM (RPC1-7) INPUT VOLTAGE PUI: JSDC00FCPG1XV 4. RPCM(RPC8-14) INPUT VOLTAGE _____ (BD) ENG: PL_PDU_B RPCM(RPC8-14) INPUT VOLTAGE PUI: JSDC00FCPG1YV **ENABLE DIU-EPS2 COMMUNICATION ERROR**	
15-090	KCDH	SSFE	CES MATE 'JEM A COMMON ACT' LOAD AND RUN MATE SCRIPT MEIT3_MATE_CMDS INDEX: 0X013D CMD: JPM_CDH_ACTIVE_JCP_EVENT_DET_ENA_TMPLT PUI: JSDC00SWZ322J PARAMETER 1: 87 (DIU_EPS 2 COMMUNICATION ERROR) GMT _____:_____:_____ (HR:MIN:SEC)	

RELEASED - Printed documents may be obsolete; validate prior to use.

SECTION IV - OPERATION INSTRUCTIONS

SEQ/STEP	CMD	RESP	DESCRIPTION	VERIF.
15-091	KCDH		TCMS VERIFY: 'DIU EVENT INHIBIT FLAG' DIU COMM ERROR – ENABLE ENG: EVENT INHIBIT FLAG (DIU EPS 2 COMMUNICATION ERROR) PUI: JSDC00SWZ31OJ **ENABLE DIU-B1 COMMUNICATION ERROR**	
15-092	KCDH	SSFE	CES MATE 'JEM A COMMON ACT' LOAD AND RUN MATE SCRIPT MEIT3_MATE_CMDS INDEX: 0X0129 CMD JPM_CDH_ACTIVE_JCP_EVENT_DET_ENA_TMPLT PUI: JSDD96IM0227K PARAMETER 1: 65 (DIU_B1 COMMUNICATION ERROR) GMT _____:_____:_____(HR:MIN:SEC)	
15-093	KCDH		TCMS VERIFY: 'DIU EVENT INHIBIT FLAG' DIU COMM ERROR - ENABLE ENG: EVENT INHIBIT FLAG(DIU_B1 COMMUNICATION ERROR) PUI: JSDC00SWZ31OJ	

RELEASED - Printed documents may be obsolete; validate prior to use.

SECTION IV - OPERATION INSTRUCTIONS

SEQ/STEP	CMD	RESP	DESCRIPTION	VERIF.
			PDB_B1 ACTIVATION	
			NOTE PDB B1 COMMUNICATION INTERFACE IS AUTOMATICALLY ESTABLISHED AFTER PDU B1 RPC 9 IS CLOSED	
15-094	KCDH	SSFE	CES MATE: LOAD AND RUN MATE SCRIPT MEIT3_MATE_CMDS INDEX: 0X00A7 CMD: JPM_EPS_PDU_B1_RPC09_(PDB_B1)_CL PUI: JSPX96IM0769K GMT _____:_____:_____(HR:MIN:SEC)	
15-095	KCDH		TCMS: VERIFY: 1. PDB_B1 RPC9 POWER STATUS – CL ENG: SYS_PDU_B RPC9 POWER STATUS PUI: JSDC00FCPI0RJ 2. PDB_B1 HEALTH STATUS SUMMARY - NORMAL ENG:PDB_B1 HEALTH STATUS SUMMARY PUI: JSDC00FCP300J 3. PDB_B1 DF STATUS - CURRENT ENG:PDB_B1 DF STATUS PUI: JSDC00SWP320J	
			NOTE DIU B3 COMMUNICATION INTERFACE IS AUTOMATICALLY ESTABLISHED AFTER PDB B1 RPC 10 IS CLOSED	
			ACTIVATE DIU-B3	
15-096	KCDH	SSFE	CES MATE: LOAD AND RUN MATE SCRIPT MEIT3_MATE_CMDS INDEX: 0X0082 CMD: JPM_EPS_PDB_B1_RPC10_(DIU_B3_CNTLR)_CL PUI: JSPX96IM0483K GMT _____:_____:_____(HR:MIN:SEC)	

RELEASED - Printed documents may be obsolete; validate prior to use.

SECTION IV - OPERATION INSTRUCTIONS

SEQ/STEP	CMD	RESP	DESCRIPTION	VERIF.
15-097	KCDH	SSFE	TCMS: VERIFY ENG: PDB_B1 RPC10 POWER STATUS - CL PUI: JSDC00FCP30SJ **NOTE** ALLOW 60 SECONDS FOR DIU_B3 TO COMPLETE INTERNAL BIT PRIOR TO VERIFICATION OF THE NEXT STEP.	
15-098	KCDH	SSFE	TCMS: VERIFY 1. DIU_B3 BIT STATUS – VALID ENG: DIU_B3 BIT STATUS PUI: JSDC00FCDA0EJ 2. DIU_B3 BIT RESULT – NORMAL ENG: DIU_B3 BIT RESULT PUI: JSDC00FCDA0FJ 3. DIU_B3 HEALTH STATUS SUMMARY - NORMAL ENG: DIU_B3 HEALTH STATUS SUMMARY PUI: JSDC00FCDA00J **ENABLE COMM BETWEEN DIU-B3 AND PDB-EPS2**	
15-099	KCDH	SSFE	CES MATE: LOAD AND RUN MATE SCRIPT MEIT3_MATE_CMDS INDEX: 0X0021 CMD: JPM_CDH_DIU/ORU_(RS422)_COMM_START_TMPLT. PUI: JSDD96IM0035K PARAMATER: 11 (DIU-B3) PARAMETER: 1 (PDB_EPS2) EXECUTE GMT _____:_____:_____(HR:MIN:SEC)	
15-100	KCDH		TCMS VERIFY 1. PDB_EPS2 DF STATUS – CURRENT ENG: PDB_EPS2 DF STATUS PUI: JSDC00SWP820J 2. PDB_EPS2 HEALTH STATUS SUMMARY - NORMAL ENG: PDB_EPS2 HEALTH STATUS SUMMARY PUI: JSDC00FCP800J	

RELEASED - Printed documents may be obsolete; validate prior to use.

SECTION IV - OPERATION INSTRUCTIONS

SEQ/STEP	CMD	RESP	DESCRIPTION	VERIF.
			NOTE DIU B2 COMMUNICATION INTERFACE IS AUTOMATICALLY ESTABLISHED AFTER PDB B1 RPC 9 IS CLOSED	
			ACTIVATE DIU-B2	
15-101	KCDH	SSFE	CES MATE: LOAD AND RUN MATE SCRIPT MEIT3_MATE_CMDS INDEX: 0X007F CMD: JPM_EPS_PDB_B1_RPC01_(DIU_B2_VLV)_CL PUI: JSPX96IM0478K EXECUTE GMT _____:_____:_____(HR:MIN:SEC)	
15-102	KCDH		TCMS: VERIFY ENG: PDB_B1 RPC1 POWER STATUS - CL PUI: JSDC00FCP30JJ	
15-103	KCDH	SSFE	CES MATE: LOAD AND RUN MATE SCRIPT MEIT3_MATE_CMDS INDEX: 0X0081 CMD: JPM_EPS_PDB_B1_RPC09_(DIU_B2_CNTLR)_CL PUI: JSPX96IM0482K EXECUTE GMT _____:_____:_____(HR:MIN:SEC)	
15-104	KCDH		TCMS: VERIFY PDB_B1 RPC9 POWER STATUS - CL ENG: PDB_B1 RPC9 POWER STATUS PUI: JSDC00FCP30RJ	

RELEASED - Printed documents may be obsolete; validate prior to use.

SECTION IV - OPERATION INSTRUCTIONS

SEQ/STEP	CMD	RESP	DESCRIPTION	VERIF.
			NOTE ALLOW 60 SECONDS FOR DIU_B2 TO COMPLETE INTERNAL BIT PRIOR TO VERIFICATION OF THE FOLLOWING STEP.	
15-105	KCDH		TCMS: VERIFY 1. DIU_B2 BIT STATUS - VALID ENG: DIU_B2 BIT STATUS PUI: JSDC00FCD80EJ 2. DIU_B2 BIT RESULT – NORMAL ENG: DIU_B2 BIT RESULT PUI: JSDC00FCD80FJ 3. DIU_B2 HEALTH STATUS SUMMARY - NORMAL ENG: DIU_B2 HEALTH STATUS SUMMARY PUI: JSDC00FCD800J	
			PDB_B2 ACTIVATION **NOTE** PDB B2 COMMUNICATION INTERFACE IS AUTOMATICALLY ESTABLISHED AFTER PDU B1 RPC 2 IS CLOSED	
15-106	KCDH	SSFE	CES MATE: LOAD AND RUN MATE SCRIPT MEIT3_MATE_CMDS INDEX: 0X00A4 CMD: JPM_EPS_PDU_B1_RPC02_(PDB_B2)_CL PUI: JSPX96IM0765K GMT _____:_____:_____(HR:MIN:SEC)	
15-107	KCDH		TCMS: VERIFY: 1. SYS_PDU_B RPC2 POWER STATUS – CL ENG: SYS_PDU_B RPC2 POWER STATUS PUI: JSDC00FCPI0KJ 2. PDB_B2 DF STATUS - CURRENT ENG: PDB_B2 DF STATUS- CURRENT PUI: JSDC00SWP420J 3. PDB_B2 HEALTH STATUS SUMMARY - NORMAL ENG: PDB_B2 HEALTH STATUS SUMMARY- NORMAL PUI: JSDC00FCP400J	

RELEASED - Printed documents may be obsolete; validate prior to use.

SECTION IV - OPERATION INSTRUCTIONS

SEQ/STEP	CMD	RESP	DESCRIPTION	VERIF.
			ACTIVATE PIB–B2	
15-108	KCDH	SSFE	CES MATE: LOAD AND RUN MATE SCRIPT MEIT3_MATE_CMDS INDEX: 0X0080 OPS NAME: JPM_EPS_PDB_B1_RPC03_(PIB_B2)_CL PUI JSPX96IM0480K EXECUTE: GMT _____:_____:_____ (DAY:HR:MIN)	
15-109	KEPS		TCMS: PDB B1:JPM EPS PDB B1 VERIFY: PDB_B1 RPC3 POWER STATUS – CL ENG: PDB_B1 RPC3 POWER STATUS PUI: JSDC00FCP30LJ	
15-110	KEPS		TCMS: PIB B2:JPM EPS PIB B2 1. PIB_B2 BIT STATUS- VALID ENG: PIB_B2 BIT STATUS PUI: JSDC00FCPK39J 2. PIB_B2 BIT RESULT- NORMAL ENG: PIB_B2 BIT RESULT PUI: JSDC00FCPK3AJ 3. PIB_B2 HEALTH STATUS SUMMARY- NORMAL ENG: PIB_B2 HEALTH STATUS SUMMARY PUI: JSDC00FCPK00J	
			ACTIVATE B-SIDE MTL DIFFERENTIAL PRESSURE SENSOR	
15-111	KTCS	SSFE	CES MATE: LOAD AND RUN MATE SCRIPT MEIT3_MATE_CMDS INDEX: 0X00AD CMD: JPM_EPS_PIB_B2_15V_SW07_(MTL_EQUIP_B_DP_SNSR_B) _CL PUI: JSPX96IM0790K GMT _____:_____:_____(HR:MIN:SEC)	

RELEASED - Printed documents may be obsolete; validate prior to use.

SECTION IV - OPERATION INSTRUCTIONS

SEQ/STEP	CMD	RESP	DESCRIPTION	VERIF.
15-112	KTCS		TCMS PIB B2:JPM EPS PIB B2 VERIFY: PIB B2 SW7 PWR STATUS - CL ENG: PIB_B2 15V SW7 POWER STATUS PUI: JSDC00FCPK1UJ	
15-113	KTCS		TCMS VERIFY: LOOP DIFF PRESS_B _____(>51.6 KPA) ENG: MTL_DIFF_PRESS_B PUI: JSDC00FCT010P **REACTIVATE PIB-B1(SET PIB-B1 LOAD LIMIT)**	
15-114	KEPS	SSFE	CES MATE LOAD AND RUN MATE SCRIPT MEIT3_MATE_CMDS INDEX: 0X0012F CMD: JPM_EPS_PDB_EPS2_RPC3_(PIB_B1)_OP PUI: JSPX96IM0575K GMT _____:_____:_____(HR:MIN:SEC)	
15-115	KEPS		TCMS PDB EPS2:JPM EPS PDB EPS2 VERIFY: PDB_EPS2 RPC3 PWR STATUS - OP ENG: PDB_EPS2 RPC3 POWER STATUS PUI: JSDC00FCP80EJ	
15-116	KEPS	SSFE	CES MATE ‘JEM B COMMON ACT’ LOAD AND RUN MATE SCRIPT MEIT3_MATE_CMDS INDEX: 0X00130 CMD: JPM_EPS_PDB_EPS2_RPC03_(PIB_B1)_CL PUI: JSPX96IM0564K GMT _____:_____:_____(HR:MIN:SEC)	

RELEASED - Printed documents may be obsolete; validate prior to use.

SECTION IV - OPERATION INSTRUCTIONS

SEQ/STEP	CMD	RESP	DESCRIPTION	VERIF.
15-117	KEPS		TCMS PDB EPS2:JPM EPS PDB EPS2 VERIFY: PDB_EPS2 RPC3 PWR STATUS - CL ENG: PDB_EPS2 RPC3 POWER STATUS PUI: JSDC00FCP80EJ	
15-118	KEPS		TCMS PIB B1:JPM EPS PIB B1 VERIFY: 1. HEALTH STATUS SUMMARY - NORMAL ENG: PIB_B1 HEALTH STATUS SUMMARY PUI: JSDC00FCPE00J 2. BIT STATUS - VALID ENG: PIB_B1 BIT STATUS PUI: JSDC00FCPE39J 3. BIT RESULT - NORMAL ENG: PIB_B1 BIT RESULT PUI: JSDC00FCPE3AJ	
			NOTE PERFORM THE FOLLOWING STEP IF REQUIRED TO POWER THE JCP B TO STANDBY.	
15-119	PTC DKQM	KCDH	PERFORM JCP-B STANDBY ACTIVATION PER R2009 SEQUENCE 21 AND REPORT COMPLETE. START GMT _____:_____:_____ (DAY:HR:MIN) COMPLETE GMT _____:_____:_____ (DAY:HR:MIN)	
				NV:_____
				NOT PERFORMED:_____
15-120	TIE PTC 052	PTC DKQM	JEM COMMON ACTIVATION (JCP-A PRIMARY) COMPLETE. GMT _____:_____:_____ (DAY:HR:MIN)	
				NV:_____

RELEASED - Printed documents may be obsolete; validate prior to use.

SECTION IV - OPERATION INSTRUCTIONS

SEQ/STEP	CMD	RESP	DESCRIPTION	VERIF.
16-000			**JEM COMMON DEACTIVATION (JCP-A PRIMARY)**	
16-001	PTC	DKQM	RECORD THE FOLLOWING INFORMATION: PROCEDURE/SEQ/STEP THAT CALLED THIS INSTRUCTION _____ GMT _____:_____:_____ (DAY:HR:MIN)	NV:_____
			NOTE PERFORM THE FOLLOWING STEP IF THE JCP-B IS NOT POWERED OFF.	
16-002	PTC DKQM	KCDH	PERFORM JCP-B STANDBY DEACTIVATION PER R2009 SEQUENCE 22 AND REPORT COMPLETE. START GMT _____:_____:_____ (DAY:HR:MIN) COMPLETE GMT _____:_____:_____ (DAY:HR:MIN)	NV:_____ NOT PERFORMED:_____

RELEASED - Printed documents may be obsolete; validate prior to use.

SECTION IV - OPERATION INSTRUCTIONS

SEQ/STEP	CMD	RESP	DESCRIPTION	VERIF.
			NOTE THE NOT PERFORMED OPTION MAY BE USED IN THE FOLLOWING 3 STEPS IF THE FOLLOWING SYSTEMS ARE NOT ACTIVATED.	
16-003	PTC	KCTE DKQM	PERFORM DEACTIVATE AUDIO SYSTEM PER R0031V1 SEQUENCE 31. START GMT _____:_____:_____ (DAY:HR:MIN) COMPLETE GMT _____:_____:_____ (DAY:HR:MIN)	NV:_____ NOT PERFORMED:_____
16-004	PTC	KCTE DKQM	PERFORM DEACTIVATE RMS CONSOLE PER R0031V1 SEQUENCE 33. REPORT COMPLETE. START GMT _____:_____:_____ (DAY:HR:MIN) COMPLETE GMT _____:_____:_____ (DAY:HR:MIN)	NV:_____ NOT PERFORMED:_____

RELEASED - Printed documents may be obsolete; validate prior to use.

SECTION IV - OPERATION INSTRUCTIONS

SEQ/STEP	CMD	RESP	DESCRIPTION	VERIF.

NOTE

THE FOLLOWING STEP REFERENCES ALL UOP'S ACTIVATED TO SUPPORT TEST AND SHOULD BE USED TO DEACTIVATE ALL EXCEPT THE UOP THAT THE SLT AND USOS PCS IS ATTACHED TO.

16-005 PTC KEPS DKQM PERFORM DEACTIVATE JEM UOP PER R2009 SEQUENCE 4. REPORT COMPLETE:

RECORD UOP DEACTIVATION OPTIONS
_____
_____
_____

START GMT _____:_____:_____ (DAY:HR:MIN)

COMPLETE GMT _____:_____:_____ (DAY:HR:MIN)

NV:_____

NOT PERFORMED:_____

SHUTDOWN MTL COOLANT DIFFERENTIAL PRESSURE SENSOR B

16-006 KTCS SSFE CES MATE:
LOAD AND RUN MATE SCRIPT
MEIT3_MATE_CMDS
INDEX: 0X00C7

CMD: PIB_B2_15V_SW7_OP_(MTL_DIFF_PRESS_SNSR_B)
PUI: JSTE96IM0236K

GMT _____:_____:_____(HR:MIN:SEC)

16-007 KTCS TCMS
VERIFY: PIB_B2 15V SW7 POWER STATUS – OP
ENG: PIB_B2 15V SW7 POWER STATUS
PUI: JSDC00FCPK1UJ

RELEASED - Printed documents may be obsolete; validate prior to use.

SECTION IV - OPERATION INSTRUCTIONS

SEQ/STEP	CMD	RESP	DESCRIPTION	VERIF.
			DEACTIVATE JEM B STRING SYSTEM EQUIPMENT	
			DEACTIVATE PIB–B2	
16-008	KEPS	SSFE	CES MATE: LOAD AND RUN MATE SCRIPT MEIT3_MATE_CMDS INDEX: 0X0084 CMD: JPM_EPS_PDB_B1_RPC03_(PIB_B2)_OP PUI JSPX96IM0491K EXECUTE: GMT _____:_____:_____(HR:MIN:SEC)	
16-009	KEPS		TCMS PDB B1:JPM EPS PDB B1 VERIFY: PDB B1 RPC3 PWR STATUS – OP ENG: PDB_B1 RPC3 POWER STATUS PUI: JSDC00FCP30LJ	
			PDB_B2 DEACTIVATION	
16-010	KEPS	SSFE	CES MATE: LOAD AND RUN MATE SCRIPT MEIT3_MATE_CMDS INDEX: 0X00A8 CMD: JPM_EPS_PDU_B1_RPC02_(PDB_B2)_OP PUI: JSPX96IM0775K GMT _____:_____:_____(HR:MIN:SEC)	
16-011	KEPS		TCMS PDU:JEM EPS PDU B1 VERIFY: PDU B1 RPC2 POSN – OP ENG: SYS_PDU_B RPC2 POWER STATUS PUI: JSDC00FCPI0KJ	

RELEASED - Printed documents may be obsolete; validate prior to use.

SECTION IV - OPERATION INSTRUCTIONS

SEQ/STEP	CMD	RESP	DESCRIPTION	VERIF.
			DEACTIVATE DIU-B2	
16-012	KCDH	SSFE	CES MATE: LOAD AND RUN MATE SCRIPT MEIT3_MATE_CMDS INDEX: 0X011F CMD:JPM_EPS_PDB_B1_RPC01_(DIU_B2_VLV)_OP(OVERRIDE) PUI: JSPC96IM0001K EXECUTE GMT _____:_____:_____ (DAY:HR:MIN)	
16-013	KCDH		TCMS: VERIFY PDB_B1 RPC1 POWER STATUS - OP ENG: PDB_B1 RPC1 POWER STATUS PUI: JSDC00FCP30JJ	
16-014	KCDH	SSFE	CES MATE: LOAD AND RUN MATE SCRIPT MEIT3_MATE_CMDS INDEX: 0X0085 CMD JPM_EPS_PDB_B1_RPC09_(DIU_B2_CNTLR)_OP PUI: JSPX96IM0493K EXECUTE GMT _____:_____:_____(HR:MIN:SEC)	
16-015	KCDH		TCMS VERIFY PDB_B1 RPC9 POWER STATUS – OP ENG: PDB_B1 RPC9 POWER STATUS PUI: JSDC00FCP30RJ	
			DEACTIVATE DIU-B3	
16-016	KCDH	SSFE	CES MATE: LOAD AND RUN MATE SCRIPT MEIT3_MATE_CMDS INDEX: 0X0086 CMD: JPM_EPS_PDB_B1_RPC10_(DIU_B3_CNTLR)_OP PUI: JSPX96IM0494K GMT _____:_____:_____(HR:MIN:SEC)	
16-017	KCDH		TCMS VERIFY PDB_B1 RPC10 POWER STATUS - OP	

RELEASED - Printed documents may be obsolete; validate prior to use.

SECTION IV - OPERATION INSTRUCTIONS

SEQ/STEP	CMD	RESP	DESCRIPTION	VERIF.

PUI: JSDC00FCP30SJ

RELEASED - Printed documents may be obsolete; validate prior to use.

SECTION IV - OPERATION INSTRUCTIONS

SEQ/STEP	CMD	RESP	DESCRIPTION	VERIF.
			PDB_B1 DEACTIVATION	
16-018	KCDH	SSFE	CES MATE: LOAD AND RUN MATE SCRIPT MEIT3_MATE_CMDS INDEX: 0X00AB CMD: JPM_EPS_PDU_B1_RPC09_(PDB_B1)_OP PUI: JSPX96IM0779K GMT _____:_____:_____(HR:MIN:SEC)	
16-019	KEPS		TCMS PDU:JEM EPS PDU B1 VERIFY: PDU B1 RPC9 POSN - OP ENG: SYS_PDU_B RPC9 POWER STATUS PUI: JSDC00FCPI0RJ	
16-020	KEPS	SDAS	PDAS VERIFY/RECORD: JEM B STRING INPUT CURRENT _____ (<= 5 AMPS)	
16-021	KEPS	DET1 DKQN	OPEN EPS MANUAL SWITCH FOR JEM B POWER STRING.	
				TNW:_____
			SHUTDOWN MTL COOLANT DIFFERENTIAL PRESSURE SENSOR A	
16-022	KCDH	SSFE	CES MATE: LOAD AND RUN MATE SCRIPT MEIT3_MATE_CMDS INDEX: 0X00BD CMD: PIB_A2_15V_SW9_OP_(MTL_DIFF_PRESS_SNSR_A) PUI: JSTE96IM0174K GMT _____:_____:_____(HR:MIN:SEC)	

RELEASED - Printed documents may be obsolete; validate prior to use.

SECTION IV - OPERATION INSTRUCTIONS

SEQ/STEP	CMD	RESP	DESCRIPTION	VERIF.
16-023	KTCS		TCMS VERIFY: PIB_A2 15V SW9 POWER STATUS - OP PUI: JSDC00FCPD1WJ	
			SHUTDOWN JEM A-STRING EQUIPMENT	
			DEACTIVATE PIB_A2	
16-024	KCDH	SSFE	CES MATE: LOAD AND RUN MATE SCRIPT MEIT3_MATE_CMDS INDEX: 0X007C CMD: JPM_EPS_PDB_A2_RPC03_(PIB_A2)_OP PUI: JSPX96IM0468K EXECUTE GMT _____:_____:_____(HR:MIN:SEC)	
16-025	KCDH		TCMS VERIFY: PDB_A2 RPC3 POWER STATUS – OP ENG: PDB_A2 RPC3 POWER STATUS PUI: JSDC00FCP20EJ	
			DEACTIVATE PDB_A1	
16-026	KCDH	SSFE	CES MATE: LOAD AND RUN MATE SCRIPT MEIT3_MATE_CMDS INDEX: 0X00A3 CMD: JPM_EPS_PDU_A1_RPC12_(PDB_A1)_OP PUI: JSPX96IM0758K GMT _____:_____:_____(HR:MIN:SEC)	
16-027	KCDH		TCMS VERIFY: ENG: SYS_PDU_A RPC12 POWER STATUS- OP PUI: JSDC00FCPH0RJ	

RELEASED - Printed documents may be obsolete; validate prior to use.

SECTION IV - OPERATION INSTRUCTIONS

SEQ/STEP	CMD	RESP	DESCRIPTION	VERIF.
			DEACTIVATE DIU A3	
16-028	KCDH	SSFE	CES MATE: LOAD AND RUN MATE SCRIPT MEIT3_MATE_CMDS INDEX: 0X011A CMD: JPM_EPS_PDB_A2_RPC05_(DIU_A3_VLV)_OP(OVERRIDE) PUI: JSPC96IM0000K EXECUTE GMT _____:_____:_____(HR:MIN:SEC)	
16-029	KCDH		TCMS VERIFY: PDB_A2 RPC5 POWER STATUS – OP ENG: PDB_A2 RPC5 POWER STATUS PUI: JSDC00FCP20GJ	
16-030	KCDH	SSFE	CES MATE: LOAD AND RUN MATE SCRIPT MEIT3_MATE_CMDS INDEX: 0X007E CMD JPM_EPS_PDB_A2_RPC07_(DIU_A3_CNTLR)_OP PUI: JSPX96IM0472K EXECUTE GMT _____:_____:_____(HR:MIN:SEC)	
16-031	KCDH		TCMS VERIFY: PDB A2 RPC7 – OP ENG: PDB_A2 RPC7 POWER STATUS PUI: JSDC00FCP20IJ	
			DEACTIVATE DIU A2	
16-032	KCDH	SSFE	CES MATE: LOAD AND RUN MATE SCRIPT MEIT3_MATE_CMDS INDEX: 0X007D CMD: JPM_EPS_PDB_A2_RPC06_(DIU_A2_CNTLR)_OP PUI: JSPX96IM0471K EXECUTE GMT _____:_____:_____(HR:MIN:SEC)	

RELEASED - Printed documents may be obsolete; validate prior to use.

SECTION IV - OPERATION INSTRUCTIONS

SEQ/STEP	CMD	RESP	DESCRIPTION	VERIF.
16-033	KCDH		TCMS VERIFY: PDB_A2 RPC6 POWER STATUS – OP ENG: PDB_A2 RPC6 POWER STATUS PUI: JSDC00FCP20HJ	
			DEACTIVATE PDB_A2	
16-034	KCDH	SSFE	CES MATE: LOAD AND RUN MATE SCRIPT MEIT3_MATE_CMDS INDEX: 0X00A2 CMD: JPM_EPS_PDU_A1_RPC11_(PDB_A2)_OP PUI: JSPX96IM0757K EXECUTE GMT _____:_____:_____(HR:MIN:SEC)	
16-035	KCDH		TCMS VERIFY ENG: SYS_PDU_A RPC11 POWER STATUS – OP PUI: JSDC00FCPH0QJ	
			DEACTIVATE PDB WS	
16-036	KEPS	SSFE	CES MATE 'JEM_B_COMMON_DEACT' LOAD AND RUN MATE SCRIPT MEIT3_MATE_CMDS INDEX: 0X0128 CMD: JPM_EPS_PDU_A1_RPC09_(PDB_A_WS)_OP PUI: JSPX96IM0755K GMT _____:_____:_____(HR:MIN:SEC)	

RELEASED - Printed documents may be obsolete; validate prior to use.

SECTION IV - OPERATION INSTRUCTIONS

SEQ/STEP	CMD	RESP	DESCRIPTION	VERIF.
16-037	KEPS		TCMS PDU A1:JPM EPS PDU A1 VERIFY: PDU A1 RPC9 PWR STATUS – OP ENG: SYS_PDU_A RPC9 POWER STATUS PUI: JSDC00FCPH0OJ **JCP-A DEACTIVATION** **ENABLE COMM BETWEEN C&C AND DIU_EPS1**	
16-038	KCDH	SSFE	CES MATE: LOAD AND RUN MATE SCRIPT MEIT3_MATE_CMDS INDEX: 0X00E8 CMD: PRIM_CCS_ENA_RT_TMPLT PUI: LADD96IM1018K PARAMETER 1: CB-EXT-1 PARAMETER 2: RT-18 GMT _____:_____:_____(HR:MIN:SEC)	
16-039	KCDH		TCMS (DMON) VERIFY 1. JEM_DIU_1_RT_18 – TRUE (ENA) ENG: CB_EXT_1_RT_ENA_JEM_DIU_1_RT_18 PUI: LADP01MDAVX2J 2. EPS_RACK1_DIU HEALTH STATUS SUMMARY [ACT] – NORMAL ENG: EPS_RACK1_DIU HEALTH STATUS SUMMARY [ACT] PUI: JMDC03FCA100J 3. PDU A1 HEALTH STATUS SUMMARY [ACT] – NORMAL ENG: PDU A1 HEALTH STATUS SUMMARY [ACT] PUI: JMDC03FCPH00J 4. PDU A1 RPC 4 (PDB EPS 2) POWER STATUS [ACT] - CL ENG: PDU A1 RPC 4 (PDB EPS 2) POWER STATUS [ACT] PUI: JMDC03FCPH0JJ	

RELEASED - Printed documents may be obsolete; validate prior to use.

SECTION IV - OPERATION INSTRUCTIONS

SEQ/STEP	CMD	RESP	DESCRIPTION	VERIF.
			ENABLE COMMAND BETWEEN C&C AND DIU_EPS1	
16-040	KCDH	SSFE	CES MATE: LOAD AND RUN MATE SCRIPT MEIT3_MATE_CMDS INDEX: 0X0008 CMD: JPM_CDH_DIU_A4_CMD_RCV_FROM_C&C_MDM_INH_OVRD PUI: JSDD96IM0004K GMT _____:_____:_____(HR:MIN:SEC)	
16-041	KCDH		TCMS VERIFY: EPS_RACK1_DIU_MDM COMMAND INHIBIT FLAG – ENABLE PUI: JSDC00FCA11QJ	
			INHIBIT COMM FDIR BETWEEN C&C AND JCP-A	
16-042	KCDH	SSFE	CES MATE: LOAD AND RUN MATE SCRIPT MEIT3_MATE_CMDS INDEX: 0X00DD CMD: PRIM_CCS_INH_RT_FDIR_TMPLT PUI: LADD96IM0770K PARAMETER 1: CB-EXT 1 PARAMETER 2: RT 19 GMT _____:_____:_____(HR:MIN:SEC)	

RELEASED - Printed documents may be obsolete; validate prior to use.

SECTION IV - OPERATION INSTRUCTIONS

SEQ/STEP	CMD	RESP	DESCRIPTION	VERIF.
16-043	KCDH		TCMS VERIFY: RT FDIR FOR JCP-A – TRUE(INH) PUI: LADP01MDAVWXJ **NOTE** VERIFICATION OF JCP SHUTDOWN IS NOT POSSIBLE UNTIL COM IS RE-ENABLED BETWEEN DIU-EPS-2 AND C&C MDM. **NOTE** A COMM ERROR C&W MESSAGE IS EXPECTED AFTER THE NEXT STEP IS PERFORMED SINCE THE JCP-B IS NOT ACTIVATED. THE MESSAGE “CDH PRIMARY JEM CONTROL PROCESSOR FAIL – JEM” WILL OCCUR. **SHUTDOWN JCP_A**	
16-044	KCDH	SSFE	CES MATE: LOAD AND RUN MATE SCRIPT MEIT3_MATE_CMDS INDEX: 0X006B CMD: PRIM_JCP_A_SHUTDN PUI: JSDD96IM0264K GMT _____:_____:_____(HR:MIN:SEC) **NOTE** WAIT APPOXIMATELY 2 MINUTES BEFORE PERFORMING THE NEXT STEP	
16-045	KCDH	MS1	TCMS VERIFY: FRAME COUNT- NOT INCREMENTING ENG: FRAME COUNTER PUI: JSDC00SWZ999U GMT ____:____:____ (DAY:HR:MIN)	

RELEASED - Printed documents may be obsolete; validate prior to use.

SECTION IV - OPERATION INSTRUCTIONS

SEQ/STEP	CMD	RESP	DESCRIPTION	VERIF.
			NOTE WAIT APPOXIMATELY 1 MINUTE BEFORE PERFORMING THE NEXT STEP	
			NOTE MUST USE [ACT] PUIS FOR ALL JEM CMDS AFTER THIS POINT.	
16-046	KCDH		TCMS VERIFY JCP_A FAULT SIGNAL [ACT] – NO (NORMAL) PUI: JMDC03FCZA03J	
16-047	KCDH	SSFE	CES MATE LOAD AND RUN MATE SCRIPT MEIT3_MATE_CMDS INDEX: 0X00F0 CMD: 19 JCP A RT I/O -INHIBIT OPS :PRIM_CCS_INH_JCP_CB_EXT_1_RT_19 PUI: LADD96IM1019K GMT _____:_____:_____(HR:MIN:SEC)	
16-048	KCDH		TCMS VERIFY 19 JCP A RT STATUS I/O - FALSE(INH) PUI: LADP01MDAVWTJ	

RELEASED - Printed documents may be obsolete; validate prior to use.

SECTION IV - OPERATION INSTRUCTIONS

SEQ/STEP	CMD	RESP	DESCRIPTION	VERIF.
			NOTE PERFORM THE FOLLOWING STEP IS THE SLT IS POWERED ON.	
16-049	PTC	KCDH DKQM	PERFORM SLT DEACTIVATION PER R2009 OPERATION INSTRUCTION 06. REPORT COMPLETE. START GMT _____:_____:_____ (DAY:HR:MIN) COMPLETE GMT _____:_____:_____ (DAY:HR:MIN) NV:_____ NOT PERFORMED:_____	
			NOTE PERFORM THE FOLLOWING STEP IS THERE ARE ANY JEM UOP'S POWERED ON.	
16-050	PTC	KEPS DKQM	PERFORM JEM UOP PANEL DEACTIVATION PER R2009 SEQUENCE 04. REPORT COMPLETE. RECORD UOP DEACTIVATION OPTIONS _____ _____ _____ START GMT _____:_____:_____ (DAY:HR:MIN) COMPLETE GMT _____:_____:_____ (DAY:HR:MIN) NV:_____ NOT PERFORMED:_____	
			POWER OFF JCP_A	
16-051	KCDH	SSFE	CES MATE: LOAD AND RUN MATE SCRIPT MEIT3_MATE_ACT_CMDS INDEX: 0X004A CMD: JPM_EPS_PDB_A_DMS1_RPC01_(JCP_A_MPC/BIC)_OP_(A CT) PUI: LADD96IM1088K GMT _____:_____:_____(HR:MIN:SEC)	

RELEASED - Printed documents may be obsolete; validate prior to use.

SECTION IV - OPERATION INSTRUCTIONS

SEQ/STEP	CMD	RESP	DESCRIPTION	VERIF.
16-052	KCDH		TCMS VERIFY: PDB_DMS1 RPC1 POWER STATUS [ACT] – OP ENG: PDB_DMS1 RPC1 POWER STATUS [ACT] PUI: JMDC03FCP50CJ	
16-053	KCDH	SSFE	CES MATE: LOAD AND RUN MATE SCRIPT MEIT3_MATE_ACT_CMDS INDEX: 0X004B CMD: JPM_EPS_PDB_A_DMS1_RPC07_(JCP_A_EDSU)_OP_(ACT) PUI: LADD96IM1089K GMT _____:_____:_____(HR:MIN:SEC)	
16-054	KCDH		TCMS VERIFY: PDB_DMS1 RPC7 POWER STATUS [ACT]- OP ENG: PDB_DMS1 RPC7 POWER STATUS [ACT] PUI: JMDC03FCP50IJ **DEACTIVATE PDB-DMS1**	
16-055	KCDH	SSFE	CES MATE: LOAD AND RUN MATE SCRIPT MEIT3_MATE_ACT_CMDS INDEX: 0X0007 CMD: JPM_CDH_DIU_A4/PDB_DMS1_(RS422_CH1)_COMM_STOP_(ACT) PUI: LADD96IM1071K EXECUTE GMT ____:____:____ (DAY:HR:MIN)	
16-056	KEPS		TCMS PRE JCP:SLB1_A ‘JPM EPS SYS LOC BUS1:AV STR A’ VERIFY: DATA FRAME TIME TAG – “NOT INCREMENTING” ENG: PDB_DMS1 DATA FRAME TIME TAG PUI: JMDC03FC0041W	

RELEASED - Printed documents may be obsolete; validate prior to use.

SECTION IV - OPERATION INSTRUCTIONS

SEQ/STEP	CMD	RESP	DESCRIPTION	VERIF.
16-057	KEPS	SSFE	CES MATE: LOAD AND RUN MATE SCRIPT MEIT3_MATE_ACT_CMDS INDEX: 0X0026 CMD: PDU_A1_RPC10_OP_(PDB_DMS1)_ACT PUI: LAPX96IM0372K GMT ____:____:____ (HR:MIN:SEC)	
16-058	KEPS		TCMS PDU A1:JPM EPS PDU A1 VERIFY: PDU A1 RPC10 PWR STATUS – OP ENG: SYS_PDU_A RPC10 POWER STATUS [ACT] PUI: JMDC03FCPH0PJ **INHIBIT FDIR BETWEEN DIU-EPS-1 AND C&C MDM**	
16-059	KCDH	SSFE	CES MATE: LOAD AND RUN MATE SCRIPT MEIT3_MATE_CMDS INDEX: 0X00DC CMD PRIM_CCS_INH_RT_FDIR_TMPLT PUI: LADD96IM0770K PARAMETER 1: CB-EXT-1 PARAMETER 2: RT-18 EXECUTE GMT ____:____:____ (HR:MIN:SEC)	
16-060	KCDH		TCMS VERIFY: RT FDIR FOR RT 18 – TRUE (INH) PUI: LADP01MDAVX6J **INHIBIT COMM BETWEEN DIU-EPS1 AND C&C MDM**	
16-061	KCDH	SSFE	CES MATE: LOAD AND RUN MATE SCRIPT MEIT3_MATE_CMDS INDEX: 0X00EF CMD PRIM_CCS_INH_RT_TMPLT PUI: LADD96IM1019K PARAMETER 1: CB-EXT-1 PARAMETER 2: RT- 18 EXECUTE GMT ____:____:____ (HR:MIN:SEC)	

RELEASED - Printed documents may be obsolete; validate prior to use.

SECTION IV - OPERATION INSTRUCTIONS

SEQ/STEP	CMD	RESP	DESCRIPTION	VERIF.
16-062	KCDH		TCMS VERIFY: RT STATUS FOR RT 18 – FALSE(INH) PUI: LADP01MDAVX2J	
16-063	KEPS	SDAS	PDAS VERIFY/RECORD: JEM A STRING INPUT CURRENT _____ (<= 5 AMPS)	
16-064	KEPS	DET1 DKQN	OPEN EPS MANUAL SWITCH FOR JEM A POWER STRING	TNW:_____
16-065	KTCS	TLM	PERFORM NASDA PROCEDURE JTP-321015 TO DEACTIVATE NASDA TCS/ESS GSE. REPORT COMPLETE. GMT ____:____:____ (DAY:HR:MIN) GMT ____:____:____ (DAY:HR:MIN)	NV:_____
16-066	TIE PTC 052	PTC DKQM	JEM COMMON DEACTIVATION (JCP-A PRIMARY) COMPLETE. GMT ____:____:____ (DAY:HR:MIN)	NV:_____

RELEASED - Printed documents may be obsolete; validate prior to use.

SECTION IV - OPERATION INSTRUCTIONS

SEQ/STEP	CMD	RESP	DESCRIPTION	VERIF.
17-000			**JEM COMMON ACTIVATION (JCP-B PRIMARY)**	
17-001	PTC	DKQM	RECORD THE FOLLOWING INFORMATION: PROCEDURE/SEQ/STEP THAT CALLED THIS INSTRUCTION _____ GMT ____:____:____ (DAY:HR:MIN)	NV:_____
			NOTE VERIFICATION OF I/0 AND FDIR INHIBITS CAN BE PERFORMED IN PARALLEL WITH TCS VALVE RECONFIGURATION.	
			NOTE PERFORM THE NEXT TWO STEPS TO RECONFIGURE TO 2WCL.	
17-002	KTCS TLM	TLM MJ1 NSQ	MANUALLY CONFIGURE JLCV-A TO 2WCL POSITION	TJW:_____
17-003	KTCS TLM	TLM MJ1 NSQ	MANUALLY CONFIGURE JLCV-B TO 2WCL POSITION	TJW:_____
				NOT PERFORMED:_____ (PREVIOUS 2 STEPS)

RELEASED - Printed documents may be obsolete; validate prior to use.

SECTION IV - OPERATION INSTRUCTIONS

SEQ/STEP	CMD	RESP	DESCRIPTION	VERIF.
			NOTE PERFORM THE FOLLOWING STEP IF JEM GSE COOLING HAS NOT BEEN ACTIVATED.	
17-004	PTC	KTCS	PERFORM DAILY TCS GSE ACTIVATION PER R0031V1 SEQUENCE 17 AND REPORT COMPLETE. START GMT _____:_____:_____ (DAY:HR:MIN) COMPLETE GMT _____:_____:_____ (DAY:HR:MIN)	NV:_____ NOT PERFORMED:_____
17-005	KCDH	MS1	VERIFY USOS PCS CONNECTED TO JEM UOP UOP-B2-AD5 (J3).	
17-006	KCDH TLM	TLM MJ1	VERIFY JEM SLT CONNECTED TO JEM UOP UOP-B2-AD5 (J4).	T:_____
			VERIFY JEM EXT-2 RT FDIR INHIBITS	
17-007	KCDH		TCMS (DMON) VERIFY RT FDIR STATUS – TRUE (INH) 15 ACBM-JS _____ PUI: LADP01MDAVV6J 16 MDP _____ PUI: LADP01MDAVVFJ 18 DIU-EPS-2 _____ PUI: LADP01MDAVUXJ 19 JCP-B _____ PUI: LADP01MDAVUOJ	
			VERIFY JEM EXT-1 RT FDIR INHIBITS	
17-008	KCDH		TCMS(DMON): VERIFY: RT FDIR STATUS – TRUE (INH) RT 15 ACBM-JP _____ PUI: LADP01MDAVXFJ RT 18 DIU-EPS-1 _____ PUI: LADP01MDAVX6J RT 19 JCP-A _____ PUI: LADP01MDAVWXJ	

RELEASED - Printed documents may be obsolete; validate prior to use.

SECTION IV - OPERATION INSTRUCTIONS

SEQ/STEP	CMD	RESP	DESCRIPTION	VERIF.
			VERIFY JEM EXT-2 RT –I/O INHIBITS	
17-009	KCDH		TCMS (DMON) VERIFY: RT STATUS I/O – FALSE (INH) 15 ACBM-JS _____ PUI: LADP01MDAVV2J 16 MDP _____ PUI: LADP01MDAVVBJ 18 DIU-EPS-2 _____ PUI: LADP01MDAVUTJ 19 JCP-B _____ PUI: LADP01MDAVUKJ	
			VERIFY JEM EXT –1 RT – I/O INHIBITIS	
17-010	KCDH		TCMS (DMON) VERIFY RT STATUS I/O – FALSE (INH) RT 15 ACBM-JP _____ PUI: LADP01MDAVXBJ RT 18 DIU-EPS-1 _____ PUI: LADP01MDAVX2J RT 19 JCP-A _____ PUI: LADP01MDAVWTJ	
17-011	PTC	ALL	VERIFY READY TO PROCEDURE WITH JEM B STRING SYSTEMS ACTIVATION	
			NOTE ONCE THE ISOLATION SWITCH IS CLOSED THE FOLLOWING BOXES WILL HAVE POWER APPLIED: PDU-A1, PDU-A2, PDB-EPS1, DIU-EPS-A, DIU-A1, PIB-A1.	
17-012	KEPS	DET1 DKQN	CLOSE EPS MANUAL SWITCH FOR JEM B STRING POWER	

TNW:_____

RELEASED - Printed documents may be obsolete; validate prior to use.

SECTION IV - OPERATION INSTRUCTIONS

SEQ/STEP	CMD	RESP	DESCRIPTION	VERIF.
			ESTABLISH COMM BETWEEN C&C MDM AND DIU-EPS-2	
17-013	KCDH	SSFE	CES MATE LOAD AND RUN MATE SCRIPT JEMB_ACT_CMDS INDEX: 0X0000 CMD PRIM_CCS_ENA_RT_TMPLT PUI: LADD96IM1018K PARAMETER 1 : CB-EXT-2 PARAMETER 2 : RT-18 GMT _____:_____:_____ (HR:MIN:SEC)	
17-014	KCDH		TCMS (DMON) VERIFY: DIU-EPS2 RT STATUS I/O - TRUE (ENA) PUI: LADP01MDAVUTJ OPS: PRIM_CCS_CB_EXT_2_RT_ENA_JEM_DIU_2_RT_18	
17-015	KCDH	SSFE	CES MATE PRESS ‘RUN’ BUTTON TO ISSUE THE NEXT COMMAND FROM MATE SCRIPT JEMB_ACT_CMDS: INDEX: 0X0001 CMD: PRIM_CCS_ENA_RT_FDIR_TMPLT_ PUI: LADD96IM0769K PARAMETER: CB-EXT-2 PARAMETER: RT-18 GMT _____:_____:_____ (HR:MIN:SEC)	
17-016	KCDH		TCMS (DMON) VERIFY: DIU-EPS2 RT FDIR (RT 18) – FALSE (ENA) PUI: LADP01MDAVUXJ OPS: PRIM_CCS_CB_EXT_2_RT_FDIR_INH_JEM_DIU_2_RT_18	

RELEASED - Printed documents may be obsolete; validate prior to use.

SECTION IV - OPERATION INSTRUCTIONS

SEQ/STEP	CMD	RESP	DESCRIPTION	VERIF.
17-017	KCDH		TCMS (ACTIVATION STR B:DIU EPS 2) VERIFY 'DIU FRAME' 1. ENG: EPS_RACK2_DIU BIT STAT [ACT] - VALID PUI: JMDC04FCA60EJ 2. ENG: EPS_RACK2_DIU BIT RESULT [ACT] - NORMAL PUI: JMDC04FCA60FJ 3. HEALTH SUM - NORMAL EPS_RACK2_DIU HEALTH STATUS SUMMARY [ACT] PUI: JMDC04FCA600J **ESTABLISH COMM BETWEEN DIU-EPS-2 AND PDU-B1**	
17-018	KEPS	SSFE	CES MATE PRESS 'RUN' BUTTON TO ISSUE THE NEXT COMMAND FROM MATE SCRIPT JEMB_ACT_CMDS: INDEX: 0X0002 CMD: JPM_CDH_DIU_B4/PDU_B1_(RS422_CH5)_COMM_START_(ACT) PUI: LADD96IM1101K GMT _____:_____:_____ (HR:MIN:SEC)	
17-019	KEPS		TCMS PRE-JCP:SLB1_B 'JPEM EPS PRE-JCP PDU B1' VERIFY: 1. DATA FRAME COUNTER – "INCREMENTING" ENG: SYS_PDU_B DATA FRAME TIME TAG – INCREMENTING PUI: JMDC04FC0081W 2. HEALTH SUMMARY - NORMAL ENG: SYS_PDU_B HEALTH STATUS SUMMARY [ACT] PUI: JMDC04FCPI00J 3. PDU B1 RPC4 POSN - CL SYS_PDU_B RPC4 POWER STATUS [ACT]- ON PUI: JMDC04FCPI0MJ	

RELEASED - Printed documents may be obsolete; validate prior to use.

SECTION IV - OPERATION INSTRUCTIONS

SEQ/STEP	CMD	RESP	DESCRIPTION	VERIF.
17-020	KEPS		TCMS PRE-JCP:SLB1_B 'JEM EPS PRE-JCP PDU B1' RECORD: 1. INPUT VOLTAGE RPC 1-7 _____ (BD) ENG: SYS_PDU_B_RPCM(RPC1-7)_ INPUT VOLTAGE [ACT] PUI: JMDC04FCPI1XV 2. INPUT VOLTAGE RPC 18-14 _____ (BD) ENG: SYS_PDU_B_RPCM (RPC 8-14) INPUT VOLTAGE [ACT] PUI: JMDC04FCPI1YV **ESTABLISH COMM BETWEEN DIU-EPS-2 AND PIB-B1**	
17-021	KEPS	SSFE	CES MATE PRESS 'RUN' BUTTON TO ISSUE THE NEXT COMMAND FROM MATE SCRIPT JEMB_ACT_CMDS: INDEX: 0X0003 CMD: JPM_CDH_DIU_B4/PIB_B1_(RS422_CH3)_COMM_START_(ACT) PUI: LADD96IM1099K GMT _____:_____:_____ (HR:MIN:SEC)	

RELEASED - Printed documents may be obsolete; validate prior to use.

SECTION IV - OPERATION INSTRUCTIONS

SEQ/STEP	CMD	RESP	DESCRIPTION	VERIF.
17-022	KEPS		TCMS PRE-JCP:PIB_B1 'JEM EPS PRE-JCP PIB B1' VERIFY: 1. BIT STATUS - VALID ENG: PIB_B1 BIT STATUS [ACT] PUI: JMDC04FCPE39J 2. BIT RESULT - NORMAL ENG: PIB_B1 BIT RESULT [ACT] PUI: JMDC04FCPE3AJ 3. HEALTH SUMMARY - NORMAL ENG: PIB_B1 HEALTH STATUS SUMMARY [ACT] PUI: JMDC04FCPE00J GMT _____:_____:_____ (DAY:HR:MIN)	
			JEM UOP_B2_AD5 ACTIVATION (PRE-JCP ACT) **NOTE** THE FOLLOWING 6 STEPS WILL ACTIVATE UOP_B2_AD5 IF REQUIRED TO SUPPORT TEST AND NOT ALREADY ACTIVATED PRE JCP ACTIVATION.	
17-023	KEPS TLM	TLM MJ1	VERIFY ALL EXPECTED DEVICES ARE CONNECTED TO JEM UOP_B2_AD5.	T:_____
17-024	KEPS	SSFE	CES MATE PRESS 'RUN' BUTTON TO ISSUE THE NEXT COMMAND FROM MATE SCRIPT JEMB_ACT_CMDS: INDEX: 0X0004 CMD: JPM_EPS_PDU_B1_RPC07_(UOP_B2_AD5)_CL_(ACT) PUI: LAPX96IM0475K GMT _____:_____:_____ (HR:MIN:SEC)	

RELEASED - Printed documents may be obsolete; validate prior to use.

SECTION IV - OPERATION INSTRUCTIONS

SEQ/STEP	CMD	RESP	DESCRIPTION	VERIF.
17-025	KEPS		TCMS PRE-JCP:PDU_B 'JEM EPS PRE-JCP PDU B1' VERIFY: PDU B1 RPC7 POSN - CL ENG: SYS_PDU_B RPC7 POWER STATUS [ACT] PUI: JMDC04FCPI0PJ	
17-026	KEPS TLM	TLM MJ1	UOP B2_AD5 VERIFY: "RESET " ILLUMINATED (WHITE)	
				T:_____

NOTE

PERFORM THE FOLLOWING STEP IF OUTPUT POWER IS REQUIRED FOR TEST.

17-027	KEPS TLM	TLM MJ1	UOP_B2_AD5 1. PRESS "POWER OUT " BUTTON 2. VERIFY: "FAULT/TEST" ILLUMINATED (GREEN) 3. VERIFY: "ENABLE" ILLUMINATED (GREEN)	
				T:_____
				NOT PERFORMED:_____
17-028	PTC	KCDH	PERFORM OPERATIONS INSTRUCTION SEQUENCE 05 PER R2009 SLT ACTIVATION. REPORT COMPLETE. START GMT _____:_____:_____ (DAY:HR:MIN) COMPLETE GMT _____:_____:_____ (DAY:HR:MIN)	
				NV:_____

RELEASED - Printed documents may be obsolete; validate prior to use.

SECTION IV - OPERATION INSTRUCTIONS

SEQ/STEP	CMD	RESP	DESCRIPTION	VERIF.

PRIMARY JCP B ACTIVATION

ENABLE COMM BETWEEN JCP B AND C&C MDM

NOTE

THE FOLLOWING STEP WILL RESULT IN THE FOLLOWING C&W MESSAGE. “CDH PRIMARY JEM CONTROL PROCESSOR FAIL – JEM” ON PCS

17-029 KCDH SSFE CES MATE

PRESS ‘RUN’ BUTTON TO ISSUE THE NEXT COMMAND FROM MATE SCRIPT JEMB_ACT_CMDS:
INDEX: 0X0005

CMD: PRIM_CCS_ENA_RT_TMPLT:
PUI: LADD96IM1018K
PARAMETER 1: CB-EXT-2
PARAMETER 2: RT 19

GMT _____:_____:_____ (HR:MIN:SEC)

17-030 KCDH TCMS
VERIFY-CB-EXT-2 RT 19 COM – TRUE (ENABLED)
PUI: LADP01MDAVUKJ
OPS: PRIM_CCS_CB_EXT_2_RT_ENA_JCP_2_RT_19

NOTE

UPON ACTIVATION OF PDB DMS2, JCP- B ACTIVATES AUTOMATICALLY

NOTE

WHEN JCP IS ACTIVATED, JCP WILL AUTOMATICALLY ESTABLISH SAMPLING WITH TAC_M. SINCE TAC_M IS POWERED OFF , THIS WILL CAUSE DIU_EPS_2 HEALTH STATUS SUMMARY TO INDICATE “ERROR”

17-031 KEPS SSFE CES MATE

PRESS ‘RUN’ BUTTON TO ISSUE THE NEXT COMMAND FROM MATE SCRIPT JEMB_ACT_CMDS:
INDEX: 0X0006

CMD:
JPM_EPS_PDU_B1_RPC03_(PDB_B_DMS2)_CL_(ACT)
PUI: LADD96IM1118K

GMT _____:_____:_____ (HR:MIN:SEC)

RELEASED - Printed documents may be obsolete; validate prior to use.

SECTION IV - OPERATION INSTRUCTIONS

SEQ/STEP	CMD	RESP	DESCRIPTION	VERIF.
17-032	KEPS		TCMS PRE-JCP:PDU_B1 'JEM EPS PRE-JCP PDU B1' VERIFY: PDU B1 RPC3 POSN - CL ENG: SYS_PDU_B RPC3 POWER STATUS [ACT] PUI: JMDC04FCPI0LJ **NOTE** JCP B TAKES BETWEEN 5.5 AND 10 MINUTES TO INITIALIZE DEPENDING ON FILE CONFIGURATION. STEPS TO ESTABLISH COMMUNICATION BETWEEN C&C MDM AND JCP B CAN BE PERFORMED IMMEDIATELY AFTER VERIFICATION OF THE FOLLOWING STEP. **NOTE** AFTER JCP-B INT PWR SWITCH IS CLOSED, THE JCP B INITIATES A SELF TEST (BIT) WHICH TAKES APPROXIMATELY 60 SECONDS TO COMPLETE. DURING THE BIT, THE JCP B FATAL ERR WILL INDICATE "YES". AFTER THE BIT IS COMPLETE, THE FATAL ERROR WILL RETURN TO "NO" DEPENDING ON TIMING OF THE RT I/O ENABLE COMMAND BETWEEN THE C&C AND JCP THIS FATAL ERROR MAY BE MONITORED. **VERIFY JCP B STATUS**	
17-033	KCDH		TCMS VERIFY 1. JCP_B SECONDARY POWER STATUS[ACT]– CL (ON) ENG: JCP_B SECONDARY POWER STATUS [ACT] PUI: JMDC04FCZB04J 2. JCP_B FAULT SIGNAL[ACT]- NO (NORMAL) ENG: JCP_B FAULT SIGNAL [ACT] PUI: JMDC04FCZB03J	

RELEASED - Printed documents may be obsolete; validate prior to use.

SECTION IV - OPERATION INSTRUCTIONS

SEQ/STEP	CMD	RESP	DESCRIPTION	VERIF.
17-034	KCDH		TCMS (JPM ACTIVE JCP INFORMATION) VERIF Y: 'ACTIVE JCP' FRAME COUNTER- INCREMENTING ENG: FRAME COUNTER PUI: JSDC00SWZ999U	
17-035	KCDH		TCMS (FAS MESSAGE LOG) VERIFY: JCP FAS MSG – FAS SERVICE STARTED (8) ENG: MESSAGE ID BOX (TO SS_PCS) 1, 2, or 3 PUI: JSDC00SWZ621J	
			ENABLE BUS FDIR BETWEEN C&C MDM AND JCP B	
17-036	KCDH	SSFE	CES MATE PRESS 'RUN' BUTTON TO ISSUE THE NEXT COMMAND FROM MATE SCRIPT JEMB_ACT_CMDS: INDEX: 0X0007 CMD: PRIM_CCS_ENA_RT_FDIR_TMPL PUI: LADD96IM0769K PARAMETER 1: CB-EXT-2 PARAMETER 2: RT 19 GMT _____:_____:_____ (HR:MIN:SEC)	
17-037	KCDH		TCMS VERIFY: CB-EXT-2 RT 19 FDIR – FALSE (ENA) PUI: LADP01MDAVUOJ OPS: PRIM_CCS_CB_EXT_2_RT_FDIR_INH_JCP_2_RT_19	
			INHIBIT COMMANDS C&C MDM AND DIU-EPS-2	
17-038	KCDH	SSFE	CES MATE PRESS 'RUN' BUTTON TO ISSUE THE NEXT COMMAND FROM MATE SCRIPT JEMB_ACT_CMDS: INDEX: 0X0008 CMD:JPM_CDH_DIU_B4_CMD_RCV_FROM_C&C_MDM_INH PUI: JSDD96IM0009K GMT _____:_____:_____ (HR:MIN:SEC)	

RELEASED - Printed documents may be obsolete; validate prior to use.

SECTION IV - OPERATION INSTRUCTIONS

SEQ/STEP	CMD	RESP	DESCRIPTION	VERIF.
17-039	KCDH		TCMS VERIFY EPS_RACK2_DIU MDM COMMAND INHIBIT FLAG- INHIBIT PUI: JSDC00FCA61QJ	
			INHIBIT FDIR BETWEEN DIU-EPS 2 AND C&C MDM	
17-040	KCDH	SSFE	CES MATE PRESS 'RUN' BUTTON TO ISSUE THE NEXT COMMAND FROM MATE SCRIPT JEMB_ACT_CMDS: INDEX: 0X0009 CMD PRIM_CCS_INH_RT_FDIR_TMPLT PUI: LADD96IM0770K PARAMETER: CB-EXT-2 PARAMETER: RT-18 GMT _____:_____:_____ (HR:MIN:SEC)	
17-041	KCDH		TCMS (DMON) VERIFY: CB-EXT-2 RT-18 FDIR STAT – TRUE - (INH) PUI: LADP01MDAVUXJ	
			INHIBIT COMM BETWEEN DIU-EPS-2 AND C&C MDM	
17-042	KCDH	SSFE	CES MATE PRESS 'RUN' BUTTON TO ISSUE THE NEXT COMMAND FROM MATE SCRIPT JEMB_ACT_CMDS: INDEX: 0X000A CMD PRIM_CCS_INH_RT_TMPLT PUI: LADD96IM1019K PARAMETER: CB-EXT-2 PARAMETER: RT-18 GMT _____:_____:_____ (HR:MIN:SEC)	
17-043	KCDH		TCMS (DMON) VERIFY: CB-EXT-2 RT-18 RT STAT – FALSE (INH) PUI: LADP01MDAVUTJ OPS: PRIM_CCS_CB_EXT_2_RT_ENA_JEM_DIU_2_RT_18	

RELEASED - Printed documents may be obsolete; validate prior to use.

SECTION IV - OPERATION INSTRUCTIONS

SEQ/STEP	CMD	RESP	DESCRIPTION	VERIF.

NOTE

[ACT] PUIS FOR ALL JEM CMDS AND TELEMETRY AFTER THIS POINT ARE NO LONGER VALID.

INHIBIT ALL EVENT CHECK AND AUTO_FUNCTION

17-044 KCDH

CES MATE

PRESS 'RUN' BUTTON TO ISSUE THE NEXT COMMAND FROM MATE SCRIPT JEMB_ACT_CMDS:
INDEX: 0X000B

CMD:JPM_CDH_ACTIVE_JCP_FAS_AUTO_PROC_INH_TMPLT
PUI: JSDD96IM0225K
PARAMETER 1 (AUTO FUNCTION ID): 98
(AUTOMATED FUNCTION INHIBIT FLAG (STOP DUMP PM))

GMT _____:_____:_____ (HR:MIN:SEC)

17-045 KCDH

TCMS

VERIFY: AUTOMATED FUNCTION INHIBIT FLAG - INHIBIT
ENG: AUTOMATED FUNCTION INHIBIT FLAG (STOP_DUMP_PM)
PUI: JSDC00SWZ420J

17-046 KCDH

CES MATE
PRESS 'RUN' BUTTON TO ISSUE THE NEXT COMMAND FROM MATE SCRIPT JEMB_ACT_CMDS:
INDEX: 0X000C

CMD:JPM_CDH_ACTIVE_JCP_FAS_AUTO_PROC_INH_TMPLT
PUI:JSDD96IM0225K
PARAMETER 1 (AUTO FUNCTION ID) : 99
(AUTOMATED FUNCTION INHIBIT FLAG(STOP DUMP ELM))

GMT _____:_____:_____ (HR:MIN:SEC)

17-047 KCDH

TCMS

VERIFY: AUTOMATED FUNCTION INHIBIT FLAG (STOP_DUMP_ELM) - INHIBIT
ENG: AUTOMATED FUNCTION INHIBIT FLAG (STOP_DUMP_ELM)
PUI: JSDC00SWZ42KJ

RELEASED - Printed documents may be obsolete; validate prior to use.

SECTION IV - OPERATION INSTRUCTIONS

SEQ/STEP	CMD	RESP	DESCRIPTION	VERIF.
17-048	KCDH		TCMS (DIU_EPS2) 'DIU BIT' HEALTH SUM – ERROR ENG: EPS_RACK2_DIU HEALTH STATUS SUMMARY PUI: JSDC00FCA600J **NOTE** COMMUNICATION IS AUTOMATICALLY ESTABLISHED BETWEEN DIU EPS 2 AND TAC M. TAC M IS NOT ACTIVE PER THE COMMON ACTIVATION SO COMMUNICATION MUST BE INHIBITED TO ELIMINATE UNWANTED ERROR INDICATIONS.	
17-049	KCDH	SSFE	CES MATE PRESS 'RUN' BUTTON TO ISSUE THE NEXT COMMAND FROM MATE SCRIPT JEMB_ACT_CMDS: INDEX: 0X000D CMD: JPM_CDH_DIU/ORU_(RS422)_COMM_STOP_TMPLT PUI: JSDD96IM0036K PARAMETER 1: 5 (DIU_EPS_2) PARAMETER 2: 6 (TAC_M) GMT _____:_____:_____ (HR:MIN:SEC)	
17-050	KCDH		TCMS (DIU EPS 2) VERIFY: HEALTH SUM – NORMAL ENG: EPS_RACK2_DIU HEALTH STATUS SUMMARY PUI: JSDC00FCA600J **DIU-B1 COMMUNICATION ERROR' EVENT ENABLE VERIFICATION**	
17-051	KCDH		TCMS (DIU_B1) 'DIU EVENT INHIBIT FLAG' DIU COMM ERR – ENABLE ENG: EVENT INHIBIT FLAG (DIU_B1 COMMUNICATION ERROR) PUI: JSDC00SWZ31OJ	

RELEASED - Printed documents may be obsolete; validate prior to use.

SECTION IV - OPERATION INSTRUCTIONS

SEQ/STEP	CMD	RESP	DESCRIPTION	VERIF.
			VERIFY DIU B1 STATUS	
			NOTE DIU- B1 WAS ACTIVATED AUTOMATICALLY DURING JEM INITIAL ACTIVATION, BUT COMMUNICATION WAS NOT ESTABLISHED UNTIL JCP-B ACTIVATION.	
17-052	KCDH		TCMS VERIFY 1. ENG: DIU_B1 BIT STATUS - VALID PUI: JSDC00FCD60EJ 2. ENG:DIU_B1 BIT RESULT - NORMAL PUI: JSDC00FCD60FJ 3. HEALTH SUM - NORMAL ENG: DIU_B1 HEALTH STATUS SUMMARY PUI: JSDC00FCD600J	
			VERIFY PDU B2 STATUS	
			NOTE PDU-B2 WAS ACTIVATED AUTOMATICALLY DURING JEM INITIAL ACTIVATION, BUT COMM WAS NOT ESTABLISHED UNTIL DIU-B1 COMMUNICATION WAS ESTABLISHED.	
17-053	KEPS		TCMS PDU B2:JPM EPS PDU B2 VERIFY: 1. DATA FRAME STATUS – CURRENT ENG: PDU PL B DF STATUS PUI: JSDC00SWPG30J 2. HEALTH STATUS SUMMARY – NORMAL ENG: PL PDU B HEALTH STATUS SUMMARY PUI: JSDC00FCPG00J	

RELEASED - Printed documents may be obsolete; validate prior to use.

SECTION IV - OPERATION INSTRUCTIONS

SEQ/STEP	CMD	RESP	DESCRIPTION	VERIF.
17-054	KEPS		TCMS PDU B2:JPM EPS PDU B2 RECORD: 1. JRPCM1 INPUT VOLTAGE _____(BD) ENG: PL_PDU_B RPCM(RPC1-7) INPUT VOLTAGE PUI: JSDC00FCPG1XV 2. JRPCM2 INPUT VOLTAGE_____ (BD) ENG: PL_PDU_B RPCM(RPC8-13) INPUT VOLTAGE PUI: JSDC00FCPG1YV **VERIFY PDB_DMS 2 STATUS** **NOTE** PDB-DMS WAS ACTIVATED PRIOR TO JCP BUT COMMUNICATION WAS NOT ESTABLISHED UNTIL JCP B ACTIVATION COMPLETE.	
17-055	KEPS		TCMS PDB DMS:JPM EPS PDB DMS2 VERIFY: 1. DATA FRAME STATUS- CURRENT ENG: PDB_DMS2 DF STATUS PUI: JSDC00SWP620J 2. HEALTH STATUS SUMMARY- NORMAL ENG: PDB_DMS2 HEALTH STATUS SUMMARY PUI: JSDC00FCP600J RECORD: 3. PDB_DMS2 INPUT VOLTAGE _____ (BD) PUI: JSDC00FCP610V	

RELEASED - Printed documents may be obsolete; validate prior to use.

SECTION IV - OPERATION INSTRUCTIONS

SEQ/STEP	CMD	RESP	DESCRIPTION	VERIF.
			PDB_B1 ACTIVATION	
			NOTE	
			PDB B1 COMMUNICATION INTERFACE IS AUTOMATICALLY ESTABLISHED AFTER PDU B1 RPC 9 IS CLOSED	
17-056	KEPS	SSFE	CES MATE	
			PRESS 'RUN' BUTTON TO ISSUE THE NEXT COMMAND FROM MATE SCRIPT JEMB_ACT_CMDS: INDEX: 0X000E	
			CMD: JPM_EPS_PDU_B1_RPC09_(PDB_B1)_CL PUI: JSPX96IM0769K	
			GMT _____:_____:_____ (HR:MIN:SEC)	
17-057	KEPS		TCMS PDU B1:JPM EPS PDU B1	
			VERIFY:	
			1. PDU B1 RPC9 POSN - CL ENG: SYS_PDU_B RPC9 POWER STATUS – ON PUI: JSDC00FCPI0RJ	
			2. DATA FRAME STATUS - CURRENT ENG: PDB_B1 DF STATUS PUI: JSDC00SWP320J	
			3. HEALTH STATUS SUMMARY – NORMAL ENG: PDB_B1 HEALTH STATUS SUMMARY PUI: JSDC00FCP300J	
			RECORD:	
			4. PDB_B1 INPUT VOLTAGE _____(BD) PUI: JSDC00FCP31LV	

RELEASED - Printed documents may be obsolete; validate prior to use.

SECTION IV - OPERATION INSTRUCTIONS

SEQ/STEP	CMD	RESP	DESCRIPTION	VERIF.

NOTE

DIU B3 COMMUNICATION INTERFACE IS AUTOMATICALLY ESTABLISHED AFTER PDB B1 RPC 10 IS CLOSED

ACTIVATE DIU-B3

17-058 KCDH SSFE CES MATE

PRESS 'RUN' BUTTON TO ISSUE THE NEXT COMMAND FROM MATE SCRIPT JEMB_ACT_CMDS:
INDEX: 0X000F

JPM_EPS_PDB_B1_RPC10_(DIU_B3_CNTLR)_CL
PUI: JSPX96IM0483K

GMT _____:_____:_____ (HR:MIN:SEC)

NOTE

ALLOW 60 SECONDS FOR DIU_B3 TO COMPLETE THE INTERNAL BIT PRIOR TO VERIFICATION OF THE NEXT STEP.

17-059 KCDH TCMS
VERIFY

1. ENG: PDB_B1 RPC10 POWER STATUS - CL
   PUI: JSDC00FCP30SJ

2. ENG:DIU_B3 HEALTH STATUS SUMMARY - NORMAL
   PUI: JSDC00FCDA00J

3. ENG:DIU_B3 BIT STATUS - VALID
   PUI: JSDC00FCDA0EJ

4. ENG: DIU_B3 BIT RESULT - NORMAL
   PUI: JSDC00FCDA0FJ

RELEASED - Printed documents may be obsolete; validate prior to use.

SECTION IV - OPERATION INSTRUCTIONS

SEQ/STEP	CMD	RESP	DESCRIPTION	VERIF.

ESTABLISH COMM BETWEEN DIU-B3 AND PDB EPS 2

NOTE:

PDB EPS2 WAS ACTIVATED AUTOMATICALLY IN INITIAL ACTIVATION BUT COMMUNICATION IS ESTABLISHED AFTER DIU B3 IS ACTIVATED, SO IT IS VERIFIED AT THIS POINT.

17-060 KCDH SSFE CES MATE

PRESS 'RUN' BUTTON TO ISSUE THE NEXT COMMAND FROM MATE SCRIPT JEMB_ACT_CMDS:
INDEX: 0X0010

CMD: JPM_CDH_DIU/ORU_(RS422)_COMM_START_TMPLT
PUI: JSDD96IM0035K
PARAMETER: 11 (DIU-B3)
PARAMETER: 1 (PDB-EPS2)

GMT _____:_____:_____ (HR:MIN:SEC)

17-061 KEPS TCMS
PDB EPS2:JPM EPS PDB EPS2

VERIFY:

1. DATA FRAME STAT- CURRENT
   ENG: PDB_EPS2 DF STATUS
   PUI: JSDC00SWP820J

2. HEALTH STATUS SUMMARY – NORMAL
   ENG: PDB_EPS2 HEALTH STATUS SUMMARY
   PUI: JSDC00FCP800J

RECORD:
3. PDB_EPS2 INPUT VOLTAGE _____ (BD)
   ENG: (PDB_EPS2 INPUT VOLTAGE)
   PUI: JSDC00FCP810V

RELEASED - Printed documents may be obsolete; validate prior to use.

SECTION IV - OPERATION INSTRUCTIONS

SEQ/STEP	CMD	RESP	DESCRIPTION	VERIF.

NOTE

DIU B2 COMMUNICATION INTERFACE IS AUTOMATICALLY ESTABLISHED AFTER PDB B1 RPC 9 IS CLOSED

ACTIVATE DIU-B2

17-062 KCDH SSFE CES MATE

PRESS 'RUN' BUTTON TO ISSUE THE NEXT COMMAND
FROM MATE SCRIPT JEMB_ACT_CMDS:
INDEX: 0X0011

CMD: JPM_EPS_PDB_B1_RPC01_(DIU_B2_VLV)_CL
PUI: JSPX96IM0478K
EXECUTE

GMT _____:_____:_____ (HR:MIN:SEC)

17-063 KCDH TCMS
VERIFY

ENG: PDB_B1 RPC1 POWER STATUS - CL
PUI: JSDC00FCP30JJ

17-064 KCDH SSFE CES MATE

PRESS 'RUN' BUTTON TO ISSUE THE NEXT COMMAND
FROM MATE SCRIPT JEMB_ACT_CMDS:
INDEX: 0X0012

CMD: JPM_EPS_PDB_B1_RPC09_(DIU_B2_CNTLR)_CL
PUI: JSPX96IM0482K
EXECUTE

GMT _____:_____:_____ (HR:MIN:SEC)

17-065 KCDH TCMS (DIU_B2)
VERIFY

'DIU RPC POSN'
RPC 9 CNTL - CL
ENG: PDB_B1 RPC9 POWER STATUS
PUI: JSDC00FCP30RJ

RELEASED - Printed documents may be obsolete; validate prior to use.

SECTION IV - OPERATION INSTRUCTIONS

SEQ/STEP	CMD	RESP	DESCRIPTION	VERIF.
			VERIFY DIU-B2 STATUS	
			NOTE ALLOW 60 SECONDS FOR DIU_B2 TO COMPLETE INTERNAL BIT PRIOR TO VERIFICATION OF THE NEXT STEP.	
17-066	KCDH		TCMS VERIFY 'DIU BIT' 1. HEALTH SUM - NORMAL ENG:DIU_B2 HEALTH STATUS SUMMARY PUI: JSDC00FCD800J 2. BIT STAT - VALID ENG: DIU_B2 BIT STATUS PUI: JSDC00FCD80EJ 3. BIT RESULT - NORMAL ENG: DIU_B2 BIT RESULT PUI: JSDC00FCD80FJ	
			PDB_B2 ACTIVATION	
			NOTE PDB B2 COMMUNICATION INTERFACE IS AUTOMATICALLY ESTABLISHED AFTER PDU B1 RPC 2 IS CLOSED	
17-067	KEPS	SSFE	CES MATE PRESS 'RUN' BUTTON TO ISSUE THE NEXT COMMAND FROM MATE SCRIPT JEMB_ACT_CMDS: INDEX: 0X0013 CMD: JPM_EPS_PDU_B1_RPC02_(PDB_B2)_CL PUI: JSPX96IM0765K GMT _____:_____:_____ (HR:MIN:SEC)	

RELEASED - Printed documents may be obsolete; validate prior to use.

SECTION IV - OPERATION INSTRUCTIONS

SEQ/STEP	CMD	RESP	DESCRIPTION	VERIF.
17-068	KEPS		TCMS PDU B1:JPM EPS PDU B1 VERIFY: 1. PDU B1 RPC2 POSN - CL ENG: SYS_PDU_B RPC2 POWER STATUS PUI: JSDC00FCPI0KJ TCMS PDB B2:JPM EPS PDB B2 2. HEALTH STATUS SUMMARY - NORMAL ENG: PDB_B2 HEALTH STATUS SUMMARY PUI: JSDC00FCP400J 3. DATA FRAME STATUS - CURRENT ENG: PDB_B2 DF_STATUS PUI: JSDC00SWP420J RECORD: 4. PDB_B2 INPUT VOLTAGE _____ (BD) PUI: JSDC00FCP410V **ACTIVATE PIB B2**	
17-069	KEPS	SSFE	CES MATE PRESS ‘RUN’ BUTTON TO ISSUE THE NEXT COMMAND FROM MATE SCRIPT JEMB_ACT_CMDS: INDEX: 0X0014 CMD: JPM_EPS_PDB_B1_RPC03_(PIB_B2)_C1 PUI JSPX96IM0480K EXECUTE: GMT _____:_____:_____ (HR:MIN:SEC)	

RELEASED - Printed documents may be obsolete; validate prior to use.

SECTION IV - OPERATION INSTRUCTIONS

SEQ/STEP	CMD	RESP	DESCRIPTION	VERIF.
17-070	KEPS		TCMS PDB:JEM EPS PDB B1 VERIFY: 1. PDB B1 RPC3 POSN - CL ENG: PDB_B1 RPC3 POWER STATUS PUI: JSDC00FCP30LJ TCMS PIB:JEM EPS PIB B2 2. BIT STATUS – VALID ENG: PIB_B2 BIT STATUS PUI: JSDC00FCPK39J 3. BIT RESULT - NORMAL ENG: PIB_B2 BIT RESULT PUI: JSDC00FCPK3AJ 4. HEALTH STATUS SUMMARY – NORMAL ENG: PIB_B2 HEALTH STATUS SUMMARY PUI: JSDC00FCPK00J	

RELEASED - Printed documents may be obsolete; validate prior to use.

SECTION IV - OPERATION INSTRUCTIONS

SEQ/STEP	CMD	RESP	DESCRIPTION	VERIF.
			ACTIVATE B-SIDE MTL DIFFERENTIAL PRESSURE SENSOR	
17-071	KTCS	SSFE	CES MATE PRESS 'RUN' BUTTON TO ISSUE THE NEXT COMMAND FROM MATE SCRIPT JEMB_ACT_CMDS: INDEX: 0X0015 CMD: JPM_EPS_PIB_B2_15V_SW07_(MTL_EQUIP_B_DP_SNSR_B)_ CL PUI: JSPX96IM0790K GMT _____:_____:_____ (HR:MIN:SEC)	
17-072	KTCS		TCMS VERIFY: PIB_B2 15V SW7 POWER STATUS - CL ENG: PIB_B2 15V SW7 POWER STATUS PUI: JSDC00FCPK1UJ	
17-073	KTCS		TCMS VERIFY: LOOP DIFF PRESS_B _____(>51.6 KPA) ENG: MTL_DIFF_PRESS_B PUI: JSDC00FCT010P	
			REACTIVATE PIB-B1(SET PIB-B1 LOAD LIMIT)	
17-074	KEPS	SSFE	CES MATE PRESS 'RUN' BUTTON TO ISSUE THE NEXT COMMAND FROM MATE SCRIPT JEMB_ACT_CMDS: INDEX: 0X0016 CMD: JPM_EPS_PDB_B_EPS2_RPC03_(PIB_B1)_OP PUI: JSPX96IM0575K GMT _____:_____:_____ (HR:MIN:SEC)	
17-075	KEPS		TCMS PDB_EPS2:JPM EPS PDB EPS2 VERIFY: PDB_EPS2 RPC3 POWER STATUS - OP ENG: PDB_EPS2 RPC3 POWER STATUS PUI: JSDC00FCP80EJ	

RELEASED - Printed documents may be obsolete; validate prior to use.

SECTION IV - OPERATION INSTRUCTIONS

SEQ/STEP	CMD	RESP	DESCRIPTION	VERIF.
17-076	KEPS	SSFE	CES MATE PRESS 'RUN' BUTTON TO ISSUE THE NEXT COMMAND FROM MATE SCRIPT JEMB_ACT_CMDS: INDEX: 0X0017 CMD: JPM_EPS_PDB_B_EPS2_RPC03_(PIB_B1)_CL PUI: JSPX96IM0564K GMT _____:_____:_____ (HR:MIN:SEC)	
17-077	KEPS		TCMS PDB EPS2:JPM PDB EPS2 VERIFY: PDB EPS2 RPC3 POSN - CL ENG: PDB_EPS2 RPC3 POWER STATUS PUI: JSDC00FCP80EJ	
17-078	KCDH		TCMS VERIFY: 1. PIB_A1 BIT STATUS [ACT]– VALID ENG: PIB_A1 BIT STATUS [ACT]– PUI: JSDC00FCPE39J 2. PIB_A1 BIT RESULT [ACT]- NORMAL ENG: PIB_A1 BIT RESULT [ACT] PUI: JSDC00FCPE3AJ 3. PIB_A1 HEALTH STATUS SUMMARY [ACT] - NORMAL ENG: PIB_A1 HEALTH STATUS SUMMARY [ACT] PUI: JSDC00FCPE00J	
17-079	PTC	ALL	VERIFY READY TO PROCEED WITH JEM A STRING SYSTEMS ACTIVATION **NOTE** ONCE THE ISOLATION SWITCH IS CLOSED THE FOLLOWING BOXES WILL HAVE POWER APPLIED: PDU-B1, PDU-B2, PDB-EPS2, DIU-EPS2, DIU-B1, PIB-B1.	
17-080	KEPS	DET1 DKQN	CLOSE EPS MANUAL SWITCH FOR JEM A STRING POWER	

TNW:_____

RELEASED - Printed documents may be obsolete; validate prior to use.

SECTION IV - OPERATION INSTRUCTIONS

SEQ/STEP	CMD	RESP	DESCRIPTION	VERIF.

NOTE

ALLOW 60 SECONDS FROM EPS SWITCH CLOSURE FOR DIU_A1 TO COMPLETE INTERNAL BIT PRIOR TO VERIFICATION OF THE NEXT STEP.

INITIAL C&DH STATUS VERIFICATION
DIU-EPS-1 VERIFICATION

17-081 KCDH

TCMS
VERIFY

1. BIT STAT - VALID
   ENG: EPS_RACK1_DIU BIT STATUS
   PUI: JSDC00FCA10EJ

2. BIT RESULT - NORMAL
   ENG: EPS_RACK1_DIU BIT RESULT
   PUI: JSDC00FCA10FJ

3. HEALTH SUM - NORMAL
   ENG: EPS_RACK1_DIU HEALTH STATUS SUMMARY
   PUI: JSDC00FCA100J

RELEASED - Printed documents may be obsolete; validate prior to use.

SECTION IV - OPERATION INSTRUCTIONS

SEQ/STEP	CMD	RESP	DESCRIPTION	VERIF.
			DIU A1 STATUS VERIFICATION	
17-082	KCDH		TCMS VERIFY 'DIU BIT' 1. BIT STAT - VALID ENG: DIU_A1 BIT STATUS PUI: JSDC00FCD00EJ 2. BIT RESULT - NORMAL ENG: DIU_A1 BIT RESULT PUI: JSDC00FCD00FJ 3. HEALTH SUM - NORMAL ENG:DIU_A1 HEALTH STATUS SUMMARY PUI: JSDC00FCD000J	
			ESTABLISH COM BETWEEN DIU-EPS1 AND PDU A1	
17-083	KEPS	SSFE	CES MATE PRESS 'RUN' BUTTON TO ISSUE THE NEXT COMMAND FROM MATE SCRIPT JEMB_ACT_CMDS: INDEX: 0X0018 CMD:JPM_CDH_DIU/ORU_(RS422)_COMM_START_TMPLT PUI: JSDD96IM0035K PARAMETER: 4 (DIU–EPS1) PARAMETER: 5 (SYS-PDU-A) EXECUTE GMT _____:_____:_____ (HR:MIN:SEC)	
17-084	KEPS		TCMS PDU A1:JPM EPS PDU A1 VERIFY: 1. DATA FRAME COUNTER – CURRENT ENG:PDU_SYS_A DF STATUS PUI: JSDC00SWPH30J 2. HEALTH STATUS SUMMARY – NORMAL ENG: SYS_PDU_A HEALTH STATUS SUMMARY PUI: JSDC00FCPH00J	

RELEASED - Printed documents may be obsolete; validate prior to use.

SECTION IV - OPERATION INSTRUCTIONS

SEQ/STEP	CMD	RESP	DESCRIPTION	VERIF.
17-085	KEPS		TCMS: PDU A1:JPM EPS PDU A1 RECORD: 1. JRPCM1 INPUT VOLTAGE – _____ (BD) ENG: SYS_PDU_A RPCM(RPC1-7) INPUT VOLTAGE PUI: JSDC00FCPH1ZV 2. JRPCM2 INPUT VOLTAGE – _____ (BD) ENG: SYS_PDU_A RPCM(RPC8-14) INPUT VOLTAGE PUI: JSDC00FCPH20V **ESTABLISH COMM BETWEEN DIU A1 AND PDU A2**	
17-086	KEPS	SSFE	CES MATE PRESS 'RUN' BUTTON TO ISSUE THE NEXT COMMAND FROM MATE SCRIPT JEMB_ACT_CMDS: INDEX: 0X0019 CMD JPM_CDH_DIU/ORU_(RS422)_COMM_START_TMPLT PUI: JSDD96IM0035K PARAMATER: 6 (DIU-A1) PARAMETER: 3 (PL_PDU_A) GMT _____:_____:_____ (HR:MIN:SEC)	
17-087	KEPS		TCMS PDU A2:JPM EPS PDU A2 VERIFY: 1. DATA FRAME STATUS - CURRENT ENG: PDU_PL_A DF STATUS PUI: JSDC00SWPF30J 2. HEALTH STATUS SUMMARY - NORMAL ENG: PL_PDU_A HEALTH STATUS SUMMARY PUI: JSDC00FCPF00J	

RELEASED - Printed documents may be obsolete; validate prior to use.

SECTION IV - OPERATION INSTRUCTIONS

SEQ/STEP	CMD	RESP	DESCRIPTION	VERIF.
17-088	KEPS		TCMS: PDU A2:JPM EPS PDU A2 RECORD: 1. JRPCM1 INPUT VOLTAGE – _____ (BD) ENG:PL_PDU_A RPCM(RPC1-7) INPUT VOLTAGE PUI: JSDC00FCPF1XV 2. JRPCM2(RPC8-13)INPUT VOLTAGE–_____ (BD) ENG: PL_PDU_A RPCM(RPC8-13) INPUT VOLTAGE PUI: JSDC00FCPF1YV **ENABLE DIU_EPS 1 COMMUNICATION ERROR**	
17-089	KCDH	SSFE	CES MATE PRESS 'RUN' BUTTON TO ISSUE THE NEXT COMMAND FROM MATE SCRIPT JEMB_ACT_CMDS: INDEX: 0X001A CMD: JPM_CDH_ACTIVE_JCP_EVENT_DET_ENA_TMPLT PUI: JSDD96IM0227K PARAMETER 1: 85 (DIU_EPS 1 COMMUNICATION ERROR) GMT _____:_____:_____ (HR:MIN:SEC)	
17-090	KCDH		TCMS (JPM DIU_EPS1) VERIFY: 'DIU EVENT INHIBIT FLAG' DIU COMM ERROR – ENABLE ENG: EVENT INHIBIT FLAG (DIU_EPS 1 COMMUNICATION ERROR) PUI: JSDC00SWZ320J **ENABLE DIU-A1 COMMUNICATION ERROR**	
17-091	KCDH	SSFE	CES MATE PRESS 'RUN' BUTTON TO ISSUE THE NEXT COMMAND FROM MATE SCRIPT JEMB_ACT_CMDS: INDEX: 0X001B CMD JPM_CDH_ACTIVE_JCP_EVENT_DET_ENA_TMPLT PUI: JSDD96IM0227K PARAMETER 1: 63 (DIU_A1 COMMUNICATION ERROR) GMT _____:_____:_____ (HR:MIN:SEC)	

RELEASED - Printed documents may be obsolete; validate prior to use.

SECTION IV - OPERATION INSTRUCTIONS

SEQ/STEP	CMD	RESP	DESCRIPTION	VERIF.
17-092	KCDH		TCMS VERIFY: 'DIU EVENT INHIBIT FLAG' DIU COMM ERROR - ENABLE ENG: EVENT INHIBIT FLAG (DIU_A1 COMMUNICATION ERROR) PUI: JSDC00SWZ31MJ **PDB-A2 ACTIVATION** **NOTE** PDB_A2 COMMUNICATION INTERFACE IS AUTOMATICALLY ESTABLISHED AFTER PDU_A1 RPC 11 IS CLOSED.	
17-093	KEPS	SSFE	CES MATE PRESS 'RUN' BUTTON TO ISSUE THE NEXT COMMAND FROM MATE SCRIPT JEMB_ACT_CMDS: INDEX: 0X001C CMD: JPM_EPS_PDU_A1_RPC11_(PDB_A2)_CL PUI: JSPX96IM0747K EXECUTE: GMT _____:_____:_____ (HR:MIN:SEC)	
17-094	KEPS		TCMS PDU A1:JPM EPS PDU A1 VERIFY: 1. PDU-A1 RPC11 POSN – CL ENG: SYS_PDU_A RPC11 POWER STATUS PUI: JSDC00FCPH0QJ TCMS PDB A2:JPM EPS PDB A2 2. HEALTH STATUS SUMMARY - NORMAL ENG: PDB_A2 HEALTH STATUS SUMMARY PUI: JSDC00FCP200J 3. DATA FRAME STATUS - CURRENT ENG: PDB_A2 DF STATUS PUI: JSDC00SWP220J	

RELEASED - Printed documents may be obsolete; validate prior to use.

SECTION IV - OPERATION INSTRUCTIONS

SEQ/STEP	CMD	RESP	DESCRIPTION	VERIF.
			ACTIVATE DIU-A2	
			NOTE DIU A2 COMMUNICATION INTERFACE IS AUTOMATICALLY ESTABLISHED AFTER PDB A2 RPC6 IS CLOSED	
17-095	KCDH	SSFE	CES MATE PRESS 'RUN' BUTTON TO ISSUE THE NEXT COMMAND FROM MATE SCRIPT JEMB_ACT_CMDS: INDEX: 0X001D CMD: JPM_EPS_PDB_A2_RPC6_(DIU_A2_CNTL)_CL PUI: JSPX96IM0462K EXECUTE GMT _____:_____:_____ (HR:MIN:SEC)	
17-096	KCDH		TCMS VERIFY: 'DIU RPC POSN' RPC 6 CNTL - CL ENG: PDB_A2 RPC6 POWER STATUS PUI: JSDC00FCP20HJ	
			NOTE ALLOW 60 SECONDS FOR DIU_A2 TO COMPLETE INTERNAL BIT TEST PRIOR TO VERIFICATION OF THE FOLLOWING STEP.	
17-097	KCDH		TCMS VERIFY: 'DIU BIT' 1. HEALTH SUMM - NORMAL ENG:DIU_A2 HEALTH STATUS SUMMARY PUI: JSDC00FCD200J 2. BIT STAT - VALID ENG: DIU_A2 BIT STATUS PUI: JSDC00FCD20EJ 3. BIT RESULT - NORMAL ENG:DIU_A2 BIT RESULT PUI: JSDC00FCD20FJ	

RELEASED - Printed documents may be obsolete; validate prior to use.

SECTION IV - OPERATION INSTRUCTIONS

SEQ/STEP	CMD	RESP	DESCRIPTION	VERIF.

ESTABLISH COMM BETWEEN DIU-A2 AND PDB-EPS 1

17-098 KEPS SSFE CES MATE

PRESS 'RUN' BUTTON TO ISSUE THE NEXT COMMAND
FROM MATE SCRIPT JEMB_ACT_CMDS:
INDEX: 0X001E

CMD: JPM_CDH_DIU/ORU_(RS422)_COMM_START_TMPLT
PUI: JSDD96IM0035K
PARAMETER 1: 7 (DIU_A2)
PARAMETER 2: 3 (PDB_EPS_1)
EXECUTE:

GMT _____:_____:_____ (HR:MIN:SEC)

17-099 KEPS TCMS
PDB EPS1:JPM EPS PDB EPS1

VERIFY:

1. DATA FRAME STATUS - CURRENT
   ENG: PDB_EPS1 DF STATUS
   PUI: JSDC00SWP720J

2. HEALTH STATUS SUMMARY - NORMAL
   ENG: PDB_EPS1 HEALTH STATUS SUMMARY

ACTIVATE DIU_A3

NOTE

DIU A3 COMMUNICATION INTERFACE IS
AUTOMATICALLY ESTABLISHED AFTER PDB A2 RPC7
IS CLOSED

17-100 KCDH SSFE CES MATE
PRESS 'RUN' BUTTON TO ISSUE THE NEXT COMMAND
FROM MATE SCRIPT JEMB_ACT_CMDS:
INDEX: 0X001F

CMD: JPM_EPS_PDB_A2_RPC05_(DIU_A3_VLV)_CL
PUI: JSPX96IM0461K

GMT _____:_____:_____ (HR:MIN:SEC)

RELEASED - Printed documents may be obsolete; validate prior to use.

SECTION IV - OPERATION INSTRUCTIONS

SEQ/STEP	CMD	RESP	DESCRIPTION	VERIF.
17-101	KCDH	SSFE	TCMS (DIU_A3) VERIFY: 'DIU RPC POSN' RPC 5 VDO - CL ENG:PDB_A2 RPC05 POWER STATUS PUI: JSDC00FCP20GJ	
17-102	KCDH	SSFE	CES MATE PRESS 'RUN' BUTTON TO ISSUE THE NEXT COMMAND FROM MATE SCRIPT JEMB_ACT_CMDS: INDEX: 0X0020 CMD: JPM_EPS_PDB_A2_RPC07_(DIU_A3_CNTLR)_CL PUI: JSPX96IM0463K EXECUTE GMT _____:_____:_____ (HR:MIN:SEC)	
17-103	KCDH		TCMS VERIFY: ENG: PDB_A2 RPC7 POWER STATUS – CL PUI: JSDC00FCP20IJ **NOTE** ALLOW 60 SECONDS FOR DIU_A3 TO COMPLETE INTERNAL BIT TEST PRIOR TO VERIFICATION OF THE FOLLOWING STEP.	
17-104	KCDH		TCMS VERIFY: 'DIU BIT' 1. HEALTHY SUM - NORMAL ENG:DIU_A3 HEALTH STATUS SUMMARY PUI: JSDC00FCD400J 2. BIT STAT - VALID ENG: DIU_A3 BIT STATUS PUI: JSDC00FCD40EJ 3. BIT RESULT - NORMAL ENG: DIU_A3 BIT RESULT PUI: JSDC00FCD40FJ	

RELEASED - Printed documents may be obsolete; validate prior to use.

SECTION IV - OPERATION INSTRUCTIONS

SEQ/STEP	CMD	RESP	DESCRIPTION	VERIF.
			ACTIVATE PDB-A1	
17-105	KEPS	SSFE	CES MATE PRESS 'RUN' BUTTON TO ISSUE THE NEXT COMMAND FROM MATE SCRIPT JEMB_ACT_CMDS: INDEX: 0X0021 CMD: JPM_EPS_PDU_A1_RPC12_(PDB_A1)_CL PUI: JSPX96IM0748K EXECUTE GMT _____:_____:_____ (HR:MIN:SEC)	
17-106	KEPS		TCMS PDU A1:JPM EPS PDU A1 VERIFY: 1. PDU A1 RPC12 POSN - CL ENG: SYS_PDU_A RPC12 POWER STATUS PUI: JSDC00FCPH0RJ TCMS PDB A1:JPM EPS PDB A1 2. HEALTH STATUS SUMMARY - NORMAL ENG: PDB_A1 HEALTH STATUS SUMMARY PUI: JSDC00FCP100J 3. DATA FRAME STATUS - CURRENT ENG: PDB_A1 DF STATUS PUI: JSDC00SWP120J	
			ACTIVATED PIB_A2	
17-107	KEPS	SSFE	CES MATE PRESS 'RUN' BUTTON TO ISSUE THE NEXT COMMAND FROM MATE SCRIPT JEMB_ACT_CMDS: INDEX: 0X0022 CMD:JPM_EPS_PDB_A2_RPC3_(PIB_A2)_CL PUI: JSPX96IM0459K EXECUTE GMT _____:_____:_____ (HR:MIN:SEC)	

RELEASED - Printed documents may be obsolete; validate prior to use.

SECTION IV - OPERATION INSTRUCTIONS

SEQ/STEP	CMD	RESP	DESCRIPTION	VERIF.
17-108	KEPS		TCMS PDB A2:JPM EPS PDB A2 VERIFY: 1. PDB A2 RPC3 POSN – CL ENG: PDB_A2 RPC3 POWER STATUS PUI: JSDC00FCP20EJ TCMS PIB A2:JPM EPS PIB A2 2. HEALTH STATUS SUMMARY- NORMAL ENG: PIB_A2 HEALTH STATUS SUMMARY PUI: JSDC00FCPD00J 3. BIT STATUS- VALID ENG: PIB_A2 BIT STATUS PUI: JSDC00FCPD39J 4. BIT RESULT- NORMAL ENG: PIB_A2 BIT RESULT PUI: JSDC00FCPD3AJ **ACTIVATE A-SIDE MTL DIFF PRESSURE SENSOR**	
17-109	KTCS	SSFE	CES MATE PRESS ‘RUN’ BUTTON TO ISSUE THE NEXT COMMAND FROM MATE SCRIPT JEMB_ACT_CMDS: INDEX: 0X0023 CMD: JPM_EPS_PIB_A2_15V_SW09_(MTL_EQUIP_A_DP_SNSR_A)_CL PUI: JSTE96IM0155K GMT _____:_____:_____ (HR:MIN:SEC)	
17-110	KTCS		TCMS VERIFY: PIB_A2 15V SW9 POWER STATUS - CL ENG:PIB_A2 15V SW9 POWER STATUS PUI: JSDC00FCPD1WJ	
17-111	KTCS		TCMS RECORD LOOP DIFF PRESS A:_____(>51.6 KPA) ENG: MTL_DIFF_PRESS_A PUI: JSDC00FCT000P	

RELEASED - Printed documents may be obsolete; validate prior to use.

SECTION IV - OPERATION INSTRUCTIONS

SEQ/STEP	CMD	RESP	DESCRIPTION	VERIF.
			REACTIVATE PIB-A1(SET PIB-A1 LOAD LIMIT)	
17-112	KEPS	SSFE	CES MATE PRESS 'RUN' BUTTON TO ISSUE THE NEXT COMMAND FROM MATE SCRIPT JEMB_ACT_CMDS: INDEX: 0X0024 CMD: JPM_EPS_PDB_A_EPS1_RPC03_(PIB_A1)_OP PUI: JSPX96IM0549K GMT _____:_____:_____ (HR:MIN:SEC)	
17-113	KEPS		TCMS PDB EPS1:JPM PDB EPS1 VERIFY: PDB EPS1 RPC3 POSN - OP ENG: PDB_EPS1 RPC3 POWER STATUS PUI: JSDC00FCP70EJ	
17-114	KEPS	SSFE	CES MATE PRESS 'RUN' BUTTON TO ISSUE THE NEXT COMMAND FROM MATE SCRIPT JEMB_ACT_CMDS: INDEX: 0X0025 CMD: JPM_EPS_PDB_A_EPS1_RPC03_(PIB_A1)_CL PUI: JSPX96IM0537K GMT _____:_____:_____ (HR:MIN:SEC)	

RELEASED - Printed documents may be obsolete; validate prior to use.

SECTION IV - OPERATION INSTRUCTIONS

SEQ/STEP	CMD	RESP	DESCRIPTION	VERIF.
17-115	KEPS		TCMS PDB EPS1:JPM EPS PDB EPS1 VERIFY: 1. PDB_EPS1 RPC3 POSN - CL ENG: PDB_EPS1 RPC3 POWER STATUS PUI: JSDC00FCP70EJ TCMS PIB:JEM EPS PIB A1 2. HEALTH STATUS SUMMARY - NORMAL ENG: PIB_A1 HEALTH STATUS SUMMARY - NORMAL PUI: JSDC00FCPC00J 3. BIT STATUS - VALID ENG: PIB_A1 BIT STATUS PUI: JSDC00FCPC39J 4. BIT RESULT - NORMAL ENG: PIB_A1 BIT RESULT PUI: JSDC00FCPC3AJ **ACTIVATE PDB WS**	
17-116	KEPS		CES MATE PRESS ‘RUN’ BUTTON TO ISSUE THE NEXT COMMAND FROM MATE SCRIPT JEMB_ACT_CMDS: INDEX: 0X0026 CMD: JPM_EPS_PDU_A1_RPC09_(PDB_A_WS)_CL PUI: JSPX96IM0745K GMT _____:_____:_____ (HR:MIN:SEC)	
17-117	KEPS		TCMS PDU A1:JPM EPS PDU A1 VERIFY: PDU A1 RPC9 POSN – CL ENG: SYS_PDU_A RPC 9 POWER STATUS PUI: JSDC00FCPH0OJ	

RELEASED - Printed documents may be obsolete; validate prior to use.

SECTION IV - OPERATION INSTRUCTIONS

SEQ/STEP	CMD	RESP	DESCRIPTION	VERIF.
			NOTE PERFORM THE FOLLOWING STEP IF REQUIRED TO POWER THE JCP A TO STANDBY.	
17-118	PTC DKQM	KCDH	PERFORM JCP-A STANDBY ACTIVATION PER R2009 SEQUENCE 19 AND REPORT COMPLETE. START GMT _____:_____:_____ (DAY:HR:MIN) COMPLETE GMT _____:_____:_____ (DAY:HR:MIN)	NV:_____ NOT PERFORMED:_____
17-119	TIE PTC 052	PTC DKQM	JEM COMMON ACTIVATION (JCP B PRIMARY) COMPLETE. GMT _____:_____:_____ (DAY:HR:MIN)	NV:_____

RELEASED - Printed documents may be obsolete; validate prior to use.

SECTION IV - OPERATION INSTRUCTIONS

SEQ/STEP	CMD	RESP	DESCRIPTION	VERIF.
18-000			**JEM COMMON DEACTIVATION (JCP-B PRIMARY)**	
18-001	PTC	DKQM	RECORD THE FOLLOWING INFORMATION: PROCEDURE/SEQ/STEP THAT CALLED THIS INSTRUCTION _____ GMT _____:_____:_____ (DAY:HR:MIN)	NV:_____
			NOTE PERFORM THE FOLLOWING STEP IF THE JCP-A IS NOT POWERED OFF.	
18-002	PTC	KCDH	PERFORM JCP-A STANDBY DEACTIVATION PER R2009 SEQUENCE 20 AND REPORT COMPLETE. START GMT _____:_____:_____ (DAY:HR:MIN) COMPLETE GMT _____:_____:_____ (DAY:HR:MIN)	NV:_____ NOT PERFORMED:_____

RELEASED - Printed documents may be obsolete; validate prior to use.

SECTION IV - OPERATION INSTRUCTIONS

SEQ/STEP	CMD	RESP	DESCRIPTION	VERIF.
			NOTE THE NOT PERFORMED OPTION MAY BE USED IN THE FOLLOWING 3 STEPS IF THE SYSTEMS ARE NOT ACTIVATED	
18-003	PTC	KCTE	PERFORM DEACTIVATE AUDIO SYSTEM DEACTIVATION PER R0031V1 OPS-SUPPORT SETUP-31 START GMT _____:_____:_____ (DAY:HR:MIN) COMPLETE GMT _____:_____:_____ (DAY:HR:MIN)	NV:_____ NOT PERFORMED:_____
18-004	PTC	KCTE	PERFORM DEACTIVATE RMS CONSOLE PER R0031V1 OPS-SUPPORT SETUP 33. REPORT COMPLETE. START GMT _____:_____:_____ (DAY:HR:MIN) COMPLETE GMT _____:_____:_____ (DAY:HR:MIN)	NV:_____ NOT PERFORMED:_____
			NOTE PERFORM THE FOLLOWING STEP IF A USOS PAYLOAD PCS IS ACTIVE IN THE JEM.	
18-005	PTC	KCDH DKQM	PERFORM FLIGHT PCS DEACTIVATION PER OMI R2009 SEQUENCE 09. REPORT COMPLETE. START GMT _____:_____:_____ (DAY:HR:MIN) COMPLETE GMT _____:_____:_____ (DAY:HR:MIN)	NV:_____ NOT PERFORMED:_____

RELEASED - Printed documents may be obsolete; validate prior to use.

SECTION IV - OPERATION INSTRUCTIONS

SEQ/STEP	CMD	RESP	DESCRIPTION	VERIF.

NOTE

THE FOLLOWING STEP REFERENCES ALL UOP'S ACTIVATED TO SUPPORT TEST AND SHOULD BE USED TO DEACTIVATE ALL EXCEPT THE UOP THAT THE SLT AND USOS PCS IS ATTACHED TO.

18-006 PTC KEPS DEACTIVATE JEM UOP(S) PER SEQUENCE 4 OF R2009 JEM UOP PANEL DEACTIVATION. REPORT COMPLETE:

RECORD UOP'S DEACTIVATION OPTIONS
_____
_____
_____

START GMT _____:_____:_____ (DAY:HR:MIN)

COMPLETE GMT _____:_____:_____ (DAY:HR:MIN)

NV:_____

NOT PERFORMED:_____

SHUTDOWN MTL COOLANT DIFFERENTIAL PRESSURE SENSOR A

18-007 KTCS SSFE CES MATE

LOAD AND RUN MATE SCRIPT
JEMB_DEACT_CMDS
INDEX: 0X0004

CMD:
JPM_EPS_PIB_A2_15V_SW09_(MTL_EQUIP_A_DP_SNSR_A
)_OP
PUI: JSTE96IM0174K

GMT _____:_____:_____ (HR:MIN:SEC)

18-008 KTCS TCMS
VERIFY:
PIB_A2 15V SW9 POWER STATUS – OP
ENG: PIB_A2 15V SW9 POWER STATUS
PUI: JSDC00FCPD1WJ

RELEASED - Printed documents may be obsolete; validate prior to use.

SECTION IV - OPERATION INSTRUCTIONS

SEQ/STEP	CMD	RESP	DESCRIPTION	VERIF.
			POWER OFF PIB_A2	
18-009	KEPS	SSFE	CES MATE PRESS 'RUN' BUTTON TO ISSUE THE NEXT COMMAND FROM MATE SCRIPT JEMB_DEACT_CMDS: INDEX: 0X0005 CMD: JPM_EPS_PDB_A2_RPC03_(PIB_A2)_OP PUI: JSPX96IM0468K GMT _____:_____:_____ (HR:MIN:SEC)	
18-010	KEPS		TCMS PDB A2:JPM EPS PDB A2 VERIFY: PDB_A2 RPC3 POSN – OP ENG: PDB_A2 RPC3 POWER STATUS PUI: JSDC00FCP20EJ	
			POWER OFF PDB A1	
18-011	KEPS	SSFE	CES MATE PRESS 'RUN' BUTTON TO ISSUE THE NEXT COMMAND FROM MATE SCRIPT JEMB_DEACT_CMDS: INDEX: 0X0006 CMD: JPM_EPS_PDU_A1_RPC12_(PDB_A1)_OP PUI: JSPX96IM0758K GMT _____:_____:_____ (HR:MIN:SEC)	
18-012	KEPS		TCMS PDU A1:JPM EPS PDU A1 VERIFY: PDU A1 RPC12 POSN - CL ENG: SYS_PDU_A RPC12 POWER STATUS PUI: JSDC00FCPH0RJ	

RELEASED - Printed documents may be obsolete; validate prior to use.

SECTION IV - OPERATION INSTRUCTIONS

SEQ/STEP	CMD	RESP	DESCRIPTION	VERIF.
			POWER OFF DIU A3	
18-013	KCDH	SSFE	CES MATE PRESS 'RUN' BUTTON TO ISSUE THE NEXT COMMAND FROM MATE SCRIPT JEMB_DEACT_CMDS: INDEX: 0X0007 CMD: JPM_EPS_PDB_A2_RPC05_(DIU_A3_VLV)_OP_(OVRD) PUI: JSPC96IM0000Q GMT _____:_____:_____(HR:MIN:SEC)	
18-014	KCDH		TCMS (DIU_A3) VERIFY: 'DIU_RPC_POSN' RPC 5 VDO – OPEN ENG: PDB_A2 RPC5 POWER STATUS - OP PUI: JSDC00FCP20GJ	
18-015	KCDH	SSFE	CES MATE PRESS 'RUN' BUTTON TO ISSUE THE NEXT COMMAND FROM MATE SCRIPT JEMB_DEACT_CMDS: INDEX: 0X0008 CMD: JPM_EPS_PDB_A2_RPC07_(DIU_A3_CNTLR)_OP PUI: JSPX96IM0472K GMT _____:_____:_____(HR:MIN:SEC)	

RELEASED - Printed documents may be obsolete; validate prior to use.

SECTION IV - OPERATION INSTRUCTIONS

SEQ/STEP	CMD	RESP	DESCRIPTION	VERIF.
18-016	KCDH		TCMS (DIU A3) VERIFY: 'DIU RPC POSN' RPC 7 CNTL – OP ENG: PDB_A2 RPC7 POWER STATUS PUI: JSDC00FCP20IJ **POWER OFF DIU A2**	
18-017	KCDH	SSFE	CES MATE PRESS 'RUN' BUTTON TO ISSUE THE NEXT COMMAND FROM MATE SCRIPT JEMB_DEACT_CMDS: INDEX: 0X0009 CMD: JPM_EPS_PDB_A2_RPC06_(DIU_A2_CNTLR)_OP PUI: JSPX96IM0471K GMT _____:_____:_____ (HR:MIN:SEC)	
18-018	KCDH		TCMS VERIFY: PDB_A2 RPC6 POWER STATUS – OP ENG: PDB_A2 RPC6 POWER STATUS PUI: JSDC00FCP20HJ **DEACTIVATE PDB_A2**	
18-019	KEPS	SSFE	CES MATE PRESS 'RUN' BUTTON TO ISSUE THE NEXT COMMAND FROM MATE SCRIPT JEMB_DEACT_CMDS: INDEX: 0X000A CMD: JPM_EPS_PDU_A1_RPC11_(PDB_A2)_OP PUI: JSPX96IM0757K GMT _____:_____:_____ (HR:MIN:SEC)	
18-020	KEPS		TCMS PDU A1:JPM EPS PDU A1 VERIFY: PDU A1 RPC11 POSN – OP ENG: SYS_PDU_A RPC11 POWER STATUS PUI: JSDC00FCPH0QJ	

RELEASED - Printed documents may be obsolete; validate prior to use.

SECTION IV - OPERATION INSTRUCTIONS

SEQ/STEP	CMD	RESP	DESCRIPTION	VERIF.
			DEACTIVATE PDB WS	
18-021	KEPS	SSFE	CES MATE PRESS 'RUN' BUTTON TO ISSUE THE NEXT COMMAND FROM MATE SCRIPT JEMB_DEACT_CMDS: INDEX: 0X000B CMD: JPM_EPS_PDU_A1_RPC09_(PDB_A_WS)_OP PUI: JSPX96IM0755K GMT _____:_____:_____(HR:MIN:SEC)	
18-022	KEPS		TCMS PDU:JEM EPS PDU A1 VERIFY: PDU_A1 RPC9 POSN – OP ENG: SYS_PDU_A RPC9 POWER STATUS PUI: JSDC00FCPH0OJ	
18-023	KEPS	SDAS	PDAS VERIFY/RECORD: JEM A STRING INPUT CURRENT _____ (</= 5 AMPS).	
18-024	KEPS	DET1 DKQN	OPEN EPS MANUAL SWITCH FOR JEM A STRING POWER STRING.	
				TNW:_____
			NOTE PERFORM THE FOLLOWING STEP IF THERE IS A FLIGHT PCS POWERED ON IN THE JEM.	
18-025	PTC	KCDH	PERFORM FLIGHT PCS DEACTIVATION PER R2009 OPERATION INSTRUCTION 09. REPORT COMPLETE. START GMT _____:_____:_____ (DAY:HR:MIN) COMPLETE GMT _____:_____:_____ (DAY:HR:MIN)	
				NV:_____
				NOT PERFORMED:_____

RELEASED - Printed documents may be obsolete; validate prior to use.

SECTION IV - OPERATION INSTRUCTIONS

SEQ/STEP	CMD	RESP	DESCRIPTION	VERIF.
			SHUTDOWN MTL COOLANT DIFFERENTIAL PRESSURE SENSOR B	
18-026	KTCS	SSFE	CES MATE PRESS 'RUN' BUTTON TO ISSUE THE NEXT COMMAND FROM MATE SCRIPT JEMB_DEACT_CMDS: INDEX: 0X000C CMD: JPM_EPS_PIB_B2_15V_SW07_(MTL_EQUIP_B_DP_SNSR_B)_OP PUI: JSTE96IM0236K GMT _____:_____:_____ (HR:MIN:SEC)	
18-027	KTCS		TCMS VERIFY: PIB_B2 15V SW7 POWER STATUS- OP ENG: PIB_B2 15V SW7 POWER STATUS PUI: JSDC00FCPK1UJ	
			DEACTIVATE PIB-B2	
18-028	KEPS	SSFE	CES MATE PRESS 'RUN' BUTTON TO ISSUE THE NEXT COMMAND FROM MATE SCRIPT JEMB_DEACT_CMDS: INDEX: 0X000D CMD: JPM_EPS_PDB_B1_RPC03_(PIB_B2)_OP PUI: JSPX96IM0491K GMT _____:_____:_____ (HR:MIN:SEC)	
18-029	KEPS		TCMS PDB B1:JPM EPS PDB B1 VERIFY: PDB B1 RPC3 POSN - OP ENG: PDB_B1 RPC3 POWER STATUS PUI: JSDC00FCP30LJ	

RELEASED - Printed documents may be obsolete; validate prior to use.

SECTION IV - OPERATION INSTRUCTIONS

SEQ/STEP	CMD	RESP	DESCRIPTION	VERIF.
			DEACTIVATE PDB_B2	
18-030	KEPS	SSFE	CES MATE PRESS 'RUN' BUTTON TO ISSUE THE NEXT COMMAND FROM MATE SCRIPT JEMB_DEACT_CMDS: INDEX: 0X000E CMD: JPM_EPS_PDU_B1_RPC02_(PDB_B2)_OP PUI: JSPX96IM0775K GMT _____:_____:_____ (HR:MIN:SEC)	
18-031	KEPS		TCMS PDU B1:JPM EPS PDU B1 VERIFY: PDU B1 RPC2 POSN – OP ENG: SYS_PDU_B RPC2 POWER STATUS PUI: JSDC00FCPI0KJ	
			DEACTIVATE DIU_B2	
18-032	KCDH	SSFE	CES MATE PRESS 'RUN' BUTTON TO ISSUE THE NEXT COMMAND FROM MATE SCRIPT JEMB_DEACT_CMDS: INDEX: 0X000F CMD: JPM_EPS_PDB_B1_RPC01_(DIU_B2_VLV)_OP_(OVRD) PUI: JSPC96IM0001K GMT _____:_____:_____ (HR:MIN:SEC)	
18-033	KCDH		TCMS (DIU_B2) VERIFY: 'DIU RPC POSN' RPC 1 VDO – OP ENG: PDB_B1 RPC1 POWER STATUS PUI: JSDC00FCP30JJ	

RELEASED - Printed documents may be obsolete; validate prior to use.

SECTION IV - OPERATION INSTRUCTIONS

SEQ/STEP	CMD	RESP	DESCRIPTION	VERIF.
18-034	KCDH	SSFE	CES MATE PRESS 'RUN' BUTTON TO ISSUE THE NEXT COMMAND FROM MATE SCRIPT JEMB_DEACT_CMDS: INDEX: 0X0010 CMD: JPM_EPS_PDB_B1_RPC09_(DIU_B2_CNTLR)_OP PUI: JSPX96IM0493K GMT _____:_____:_____ (HR:MIN:SEC)	
18-035	KCDH		TCMS (DIU B2) VERIFY: 'DIU RPC POSN' RPC 9 CNTL – OP ENG: PDB_B1 RPC9 POWER STATUS PUI: JSDC00FCP30RJ **DEACTIVATE DIU_B3**	
18-036	KCDH	SSFE	CES MATE PRESS 'RUN' BUTTON TO ISSUE THE NEXT COMMAND FROM MATE SCRIPT JEMB_DEACT_CMDS: INDEX: 0X0011 CMD: JPM_EPS_PDB_B1_RPC10_(DIU_B3_CNTLR)_OP PUI: JSPX96IM0494K GMT _____:_____:_____ (HR:MIN:SEC)	
18-037	KCDH		TCMS (DIU B3) VERIFY: 'DIU RPC POSN' RPC 10 CNTL – OP ENG: PDB_B1 RPC10 POWER STATUS-OP PUI: JSDC00FCP30SJ	

RELEASED - Printed documents may be obsolete; validate prior to use.

SECTION IV - OPERATION INSTRUCTIONS

SEQ/STEP	CMD	RESP	DESCRIPTION	VERIF.
			DEACTIVATE PDB-B1	
18-038	KEPS	SSFE	CES MATE PRESS 'RUN' BUTTON TO ISSUE THE NEXT COMMAND FROM MATE SCRIPT JEMB_DEACT_CMDS: INDEX: 0X0012 CMD: PDU_B1_RPC9_OP_(PDB_B1) PUI: JSPX96IM0779K GMT _____:_____:_____ (HR:MIN:SEC)	
18-039	KEPS		TCMS PDU B1:JPM EPS PDU B1 VERIFY: PDU B1 RPC9 POSN – OP ENG: SYS_PDU_B RPC9 POWER STATUS PUI: JSDC00FCPI0RJ	
			JCP DEACTIVATION	
			ENABLE COMM BETWEEN C&C AND DIU EPS 2	
18-040	KCDH	SSFE	CES MATE PRESS 'RUN' BUTTON TO ISSUE THE NEXT COMMAND FROM MATE SCRIPT JEMB_DEACT_CMDS: INDEX: 0X0013 CMD:PRIM_CCS_ENA_RT_TMPLT- ENA PUI: LADD96IM1018K PARAMETER 1: EXT 2 PARAMETER 2: RT 18 GMT _____:_____:_____ (HR:MIN:SEC)	

RELEASED - Printed documents may be obsolete; validate prior to use.

SECTION IV - OPERATION INSTRUCTIONS

SEQ/STEP	CMD	RESP	DESCRIPTION	VERIF.
18-041	KCDH		TCMS (DMON) VERIFY: 1. ENG: CB_EXT_2_RT_ENA_JEM_DIU_2_RT_18 – TRUE (ENA) PUI: LADP01MDAVUTJ OPS: PRIM_CCS_CB_EXT_2_RT_ENA_JEM_DIU_2_RT_18 2. ENG: EPS_RACK2_DIU HEALTH STATUS SUMMARY [ACT] – NORMAL PUI: JMDC04FCA600J 3. ENG: SYS_PDU_B HEALTH STATUS SUMMARY [ACT] – NORMAL PUI: JMDC04FCPI00J 4. ENG: SYS_PDU_B RPC 4 POWER STATUS [ACT] - CL PUI: JMDC04FCPI0MJ **ENABLE FDIR BETWEEN C&C AND DIU-EPS2**	
18-042	KCDH	SSFE	CES MATE PRESS ‘RUN’ BUTTON TO ISSUE THE NEXT COMMAND FROM MATE SCRIPT JEMB_DEACT_CMDS: INDEX: 0X0014 CMD: PRIM_CCS_ENA_RT_FDIR_TMPLT_ PUI: LADD96IM0769K PARAMETER: CB-EXT-2 PARAMETER: RT-18 EXECUTE GMT _____:_____:_____ (HR:MIN:SEC)	

RELEASED - Printed documents may be obsolete; validate prior to use.

SECTION IV - OPERATION INSTRUCTIONS

SEQ/STEP	CMD	RESP	DESCRIPTION	VERIF.
18-043	KCDH		TCMS (DMON) VERIFY: DIU-EPS2 RT FDIR (RT 18) – FALSE (ENABLE) PUI: LADP01MDAVUXJ OPS: PRIM_CCS_CB_EXT_2_RT_FDIR_INH_JEM_DIU_2_RT_18 **ENABLE COMMANDING BETWEEN C&C MDM AND DIU – EPS 2**	
18-044	KCDH	SSFE	CES MATE PRESS 'RUN' BUTTON TO ISSUE THE NEXT COMMAND FROM MATE SCRIPT JEMB_DEACT_CMDS: INDEX: 0X0015 CMD: JPM_CDH_DIU_B4_CMD_RCV_FROM_C&C_MDM_INH_OVRD PUI: JSDD96IM0008K GMT _____:_____:_____(HR:MIN:SEC)	
18-045	KCDH		TCMS (ACTIVATION STR B: DIU_EPS 2) VERIFY: 'DIU CMD INHIBIT FLAG' MDM CMD – ENABLE ENG: EPS_RACK2_DIU MDM COMMAND INHIBIT FLAG [ACT] PUI: JMDC04FCA61QJ **INHIBIT FDIR BETWEEN C&C AND JCP B**	
18-046	KCDH	SSFE	CES MATE PRESS 'RUN' BUTTON TO ISSUE THE NEXT COMMAND FROM MATE SCRIPT JEMB_DEACT_CMDS: INDEX: 0X0016 CMD: PRIM_CCS_INH_JCP_2_EXT_2_FDIR_RT_19 PUI: LADD95SM0097K GMT _____:_____:_____ (HR:MIN:SEC)	
18-047	KCDH		TCMS (DMON) VERIFY: JCP-B RT FDIR – TRUE (INH) OPS: CB_EXT_2_RT_FDIR_INH_JCP_2_RT_19 PUI: LADP01MDAVUOJ	

RELEASED - Printed documents may be obsolete; validate prior to use.

SECTION IV - OPERATION INSTRUCTIONS

SEQ/STEP	CMD	RESP	DESCRIPTION	VERIF.
			SHUTDOWN JCP B	
18-048	KCDH	SSFE	CES MATE PRESS 'RUN' BUTTON TO ISSUE THE NEXT COMMAND FROM MATE SCRIPT JEMB_DEACT_CMDS: INDEX: 0X0017 CMD: JPM_CDH_JCP_B_SHUTDN PUI: JSDD96IM0269K GMT _____:_____:_____ (HR:MIN:SEC) **NOTE** PCS MAY RECEIVE A CAUTION AND WARNING MESSAGE AFTER JCP STOPS COMMUNICATING. **NOTE** WAIT APPROXIMATELY 2 MINUTES BEFORE PERFORMING THE NEXT STEP.	
18-049	KCDH	MS1	TCMS VERIFY: FRAME COUNT- NOT INCREMENTING ENG: FRAME COUNTER PUI: JSDC00SWZ999U GMT ____:____:____ (DAY:HR:MIN) **NOTE** WAIT APPROXIMATELY 1 MINUTE BEFORE PERFORMING THE NEXT STEP **NOTE** MUST USE [ACT] PUIS FOR ALL JEM CMDS AND TELEMETRY AFTER THIS POINT.	
18-050	KCDH	MS1	TCMS (DMON) VERIFY: FATAL ERROR – NO (NORMAL) ENG: JCP_B_FAULT SIGNAL [ACT] PUI: JMDC04FCZB03J	

RELEASED - Printed documents may be obsolete; validate prior to use.

SECTION IV - OPERATION INSTRUCTIONS

SEQ/STEP	CMD	RESP	DESCRIPTION	VERIF.
18-051	KCDH	SSFE	CES MATE PRESS 'RUN' BUTTON TO ISSUE THE NEXT COMMAND FROM MATE SCRIPT JEMB_DEACT_CMDS: INDEX: 0X0018 CMD: PRIM_CCS_INH_JCP_2_CB_EXT_2_RT_19 PUI: LADD95SM0094K GMT _____:_____:_____ (HR:MIN:SEC)	
18-052	KCDH		TCMS (DMON) VERIFY 19 JCP B RT I/O - FALSE (INH) ENG: CB_EXT_2_RT_ENA_JCP_2_RT_19 PUI: LADP01MDAVUKJ	
18-053	PTC	KCDH	PERFORM SLT DEACTIVATION PER OMI R2009 SEQUENCE 06. REPORT COMPLETE. START GMT _____:_____:_____ (DAY:HR:MIN) COMPLETE GMT _____:_____:_____ (DAY:HR:MIN)	
				NV:_____

PERFORM JEM UOP-B2-AD5(J4) PANEL DEACTIVATION

18-054	KEPS TLM	TLM MJ1	VERIFY ALL DEVICES CONNECTED TO UOP-B2_AD5 ARE DEACTIVATED.	
				T:_____

NOTE

PERFORM THE FOLLOWING STEP IF THE ENABLE LIGHT IS ILLUMINATED ON UOP_B2_AD5

18-055	KEPS TLM	TLM MJ1	UOP_B2_AD5 1. PRESS "POWER OUT" BUTTON 2. VERIFY:"FAULT/TEST" NO LONGER ILLUMINATED. 3. VERIFY: "ENABLE" NO LONGER ILLUMINATED (GREEN)	
				T:_____

NOT PERFORMED:_____

RELEASED - Printed documents may be obsolete; validate prior to use.

SECTION IV - OPERATION INSTRUCTIONS

SEQ/STEP	CMD	RESP	DESCRIPTION	VERIF.
18-056	KEPS	SSFE	CES MATE PRESS 'RUN' BUTTON TO ISSUE THE NEXT COMMAND FROM MATE SCRIPT JEMB_DEACT_CMDS: INDEX: 0X0019 CMD: JPM_JPM_EPS_PDU_B1_RPC07_(UOP_B2_AD5)_OP_(ACT) PUI: LAPX96IM0467K GMT _____:_____:_____ (HR:MIN:SEC)	
18-057	KEPS		TCMS PRE-JCP:PDU_B1 'JPM EPS PRE-JCP PDU B1' VERIFY: PDU B1 RPC1 PWR STATUS - CL ENG: SYS_PDU_B RPC7 POWER STATUS [ACT] PUI: JMDC04FCPI0PJ **POWER OFF JCP B**	
18-058	KCDH	SSFE	CES MATE: PRESS 'RUN' BUTTON TO ISSUE THE NEXT COMMAND FROM MATE SCRIPT JEMB_DEACT_CMDS: INDEX: 0X001A CMD: JPM_EPS_PDB_B_DMS2_RPC01_(JCP_B_MPC/BIC)_OP_(A CT) PUI: LAPX96IM0397K GMT _____:_____:_____ (HR:MIN:SEC)	
18-059	KCDH		TMCS VERIFY: JPM_EPS_PDB_B_DMS2_RPC01_(JCP_B_MPC/BIC)_POSN_(ACT) - OP ENG: (PDB_DMS2 RPC1 POWER STATUS [ACT]) PUI: JMDC04FCP60CJ	

RELEASED - Printed documents may be obsolete; validate prior to use.

SECTION IV - OPERATION INSTRUCTIONS

SEQ/STEP	CMD	RESP	DESCRIPTION	VERIF.
18-060	KCDH	SSFE	CES MATE: PRESS 'RUN' BUTTON TO ISSUE THE NEXT COMMAND FROM MATE SCRIPT JEMB_DEACT_CMDS: INDEX: 0X001B CMD: JPM_EPS_PDB_B_DMS2_RPC07_(JCP_B_EDSU)_OP_(ACT) PUI: LAPX96IM0398K GMT _____:_____:_____ (HR:MIN:SEC)	
18-061	KCDH		TCMS VERIFY: JPM_EPS_PDB_B_DMS2_RPC07_(JCP_B_EDSU)_POSN_(ACT)- OP ENG: PDB_DMS2 RPC7 POWER STATUS [ACT] PUI: JMDC04FCP60IJ **DEACTIVATE PDB-DMS**	
18-062	KCDH	SSFE	CES MATE PRESS 'RUN' BUTTON TO ISSUE THE NEXT COMMAND FROM MATE SCRIPT JEMB_DEACT_CMDS: INDEX: 0X001C CMD: JPM_CDH_DIU_B4/PDB_B_DMS2_(RS422_CH1)_COMM_STO P_(ACT) PUI: LADD96IM1102K GMT _____:_____:_____ (HR:MIN:SEC)	
18-063	KEPS		TCMS PRE-JCP:PDU_B1 'JPM EPS PRE-JCP PDU B1' VERIFY: DF TIME TAG – "NOT INCREMENTING" ENG: PDB_DMS2 DATA FRAME TIME TAG PUI: JMDC04FC0041W	
18-064	KEPS	SSFE	CES MATE PRESS 'RUN' BUTTON TO ISSUE THE NEXT COMMAND FROM MATE SCRIPT JEMB_DEACT_CMDS: INDEX: 0X001D CMD: JPM_EPS_PDU_B1_RPC03_(PDB_B_DMS2)_OP_(ACT) PUI: LAPX96IM0457K GMT _____:_____:_____ (HR:MIN:SEC)	

RELEASED - Printed documents may be obsolete; validate prior to use.

SECTION IV - OPERATION INSTRUCTIONS

SEQ/STEP	CMD	RESP	DESCRIPTION	VERIF.
18-065	KEPS		TCMS PRE-JCP:PDU_B1 'JPM EPS PRE-JCP PDU B1' VERIFY: PDU B1 RPC1 –PWR STATUS - CL ENG: SYS_PDU_B RPC3 POWER STATUS [ACT] PUI: JMDC04FCPI0LJ	
			INHIBIT FDIR BETWEEN DIU-EPS 2 AND C&C MDM	
18-066	KCDH	SSFE	CES MATE PRESS 'RUN' BUTTON TO ISSUE THE NEXT COMMAND FROM MATE SCRIPT JEMB_DEACT_CMDS: INDEX: 0X001E CMD PRIM_CCS_INH_RT_FDIR_TMPLT PUI: LADD96IM0770K PARAMETER: CB-EXT-2 PARAMETER: RT-18 EXECUTE GMT _____:_____:_____ (HR:MIN:SEC)	
18-067	KCDH		TCMS (DMON) VERIFY: CB-EXT-2 RT-18 FDIR STAT – TRUE (INH) PUI: LADP01MDAVUXJ OPS: PRIM_CCS_CB_EXT_2_RT_FDIR_INH_JEM_DIU_2_RT_18	
			INHIBIT COMM BETWEEN DIU-EPS-2 AND C&C MDM	
18-068	KCDH	SSFE	CES MATE PRESS 'RUN' BUTTON TO ISSUE THE NEXT COMMAND FROM MATE SCRIPT JEMB_ACT_CMDS: INDEX: 0X001F CMD PRIM_CCS_INH_RT_TMPLT PUI: LADD96IM1019K PARAMETER: CB-EXT-2 PARAMETER: RT-18 EXECUTE GMT _____:_____:_____ (HR:MIN:SEC)	

RELEASED - Printed documents may be obsolete; validate prior to use.

SECTION IV - OPERATION INSTRUCTIONS

SEQ/STEP	CMD	RESP	DESCRIPTION	VERIF.
18-069	KCDH		TCMS (DMON) VERIFY: CB-EXT-2 RT-18 RT STAT – FALSE (INH) PUI: LADP01MDAVUTJ OPS: PRIM_CCS_CB_EXT_2_RT_ENA_JEM_DIU_2_RT_18	
18-070	KEPS	SDAS	PDAS VERIFY/RECORD JEM B STRING INPUT CURRENT _____ (</= 5 AMPS)	
18-071	KEPS	DET1 DKQN	OPEN EPS MANUAL SWITCH FOR JEM B-STRING POWER STRING.	TNW:_____
18-072	KTCS	TLM	PERFORM NASDA PROCEDURE JTP-321015 TO DEACTIVATE NASDA TCS/ESS GSE. REPORT COMPLETE.	
18-073	TIE PTC 052	PTC DKQM	JEM COMMON DEACTIVATION (JCP-B PRIMARY) COMPLETE. GMT _____:_____:_____ (DAY:HR:MIN)	NV:_____

RELEASED - Printed documents may be obsolete; validate prior to use.

SECTION IV - OPERATION INSTRUCTIONS

SEQ/STEP	CMD	RESP	DESCRIPTION	VERIF.
19-000			**JCP-A STANDBY ACTIVATION**	
19-001	PTC	DKQM	RECORD THE FOLLOWING INFORMATION: PROCEDURE/SEQ/STEP THAT CALLED THIS INSTRUCTION _____ GMT _____:_____:_____ (DAY:HR:MIN)	
				NV:_____
			NOTE THE FOLLOWING SEQUENCE WILL ACTIVATE PDB-DMS1 TO ACTIVATE JCP A AND CONFIGURE TO STANDBY AFTER THE COMMON ACTIVATION SEQUENCE (JCP-B PRIMARY) IS COMPLETE.	
			NOTE WHEN PDU A1 RPC 10 IS CLOSED, JCP A IS POWERED AUTOMATICALLY VIA NORMALLY CLOSED RELAYS PDB_DMS1 RPC1 (JCP A MPC/BIC) AND RPC 7 (JCP_A EDSU)	
19-002	KCDH	SSFE	CES MATE LOAD AND RUN MATE SCRIPT MEIT3_MATE_CMDS INDEX: 0X009E CMD: JPM_EPS_PDU_A1_RPC10_(PDB_A_DMS1)_CL PUI: JSPX96IM0746K GMT _____:_____:_____(HR:MIN:SEC)	

RELEASED - Printed documents may be obsolete; validate prior to use.

SECTION IV - OPERATION INSTRUCTIONS

SEQ/STEP	CMD	RESP	DESCRIPTION	VERIF.
19-003	KCDH		TCMS (SYS LOCAL BUS 1: AV STR A-2) VERIFY: 1. PDU A1 – BOX HEADER GREEN, INDICATING ON ENG: SYS_PDU_A RPC10 POWER STATUS PUI: JSDC00FCPH0PJ 2. PDB_DMS1 DF STAT – CURRENT ENG: PDB_DMS1 DF STATUS PUI: JSDC00SWP520J 3. DMS 1 HLTH STAT SUM – NORMAL ENG: PDB_DMS1 HEALTH STATUS SUMMARY PUI: JSDC00FCP500J ACTIVE JCP DISPLAY 4. JCP-A: MPC\BIC RPC POSN - ON ENG: PDB_DMS1 RPC1 POWER STATUS PUI: JSDC00FCP50CJ 5. JCP-A: EDSU-RPC POSN - ON ENG: PDB_DMS1 RPC7 POWER STATUS PUI: JSDC00FCP50IJ	

RELEASED - Printed documents may be obsolete; validate prior to use.

SECTION IV - OPERATION INSTRUCTIONS

SEQ/STEP	CMD	RESP	DESCRIPTION	VERIF.

NOTE

IT WILL TAKE APPROXIMATELY 6 MINUTES FROM JCP POWER ON UNTIL HOT STANDBY MODE IS REACHED.

VERIFICATIONS OF THE FOLLOWING STEP CANNOT BE COMPLETED UNTIL JCP IS IN HOT STANDBY MODE.

A FATAL ERROR INDICATION WILL OCCUR FOR APPROXIMATELY 1 MINUTE WHILE JCP SELF-TEST (BIT) IS RUNNING.

19-004 KCDH

TCMS (SECONDARY JCP INFORMATION)
VERIFY:

1. PWR STATUS – ON
   ENG: STAND_BY_JCP CNTLR POWER STATUS
   PUI: JSDC00SWZC1AJ

2. STAND BY JCP MODE- ‘HOT_STAND_BY’
   ENG: STAND_BY_JCP MODE
   PUI: JSDC00SWZC10J

3. RECORD DF STATUS STANDBY JCP1 - _____
   ENG: STANDBY_JCP1 DF STATUS
   PUI: JSDC00SWZC01J

4. RECORD DF STATUS STANDBY JCP2 – _____
   ENG: STANDBY_JCP2 DF STATUS
   PUI: JSDC00SWZC02J

5. RECORD DF STATUS STANDBY JCP3 – _____
   ENG: STANDBY_JCP3 DF STATUS
   PUI: JSDC00SWZC03J

6. RECORD DF STATUS STANDBY JCP4 – _____
   ENG: STANDBY_JCP4 DF STATUS
   PUI: JSDC00SWZC04J

RELEASED - Printed documents may be obsolete; validate prior to use.

SECTION IV - OPERATION INSTRUCTIONS

SEQ/STEP	CMD	RESP	DESCRIPTION	VERIF.

NOTE

PERFORM THE NEXT 2 STEPS IF JCP-A WILL BE LEFT IN A HOT STANDBY CONFIGURATION.

19-005 KCDH SSFE CES MATE
LOAD AND RUN MATE SCRIPT
MEIT3_MATE_CMDS
INDEX: 0X0065
CMD: JPM_CDH_ACTIVE_JCP_EVENT_DET_ENA_TMPLT
PUI: JSDD96IM0227K
PARAMETER 1: JCP_A COMMUNICATION ERROR (91)

GMT _____:_____:_____(HR:MIN:SEC)

19-006 KCDH TCMS (ACTIVE JCP HEALTH AND STATUS)
VERIFY:
JCP A COM ERROR - ENABLE
ENG: EVENT INHIBIT FLAG(JCP_A COMMUNICATION ERROR)
PUI: JSDC00SWZ325J

NOT PERFORMED:_____
(PREVIOUS 2 STEPS)

PERFORM STANDBY JCP SHUTDOWN

NOTE

PERFORM THE FOLLOWING 2 STEPS IF JCP-A IS REQUIRED TO BE IN COLD STNDBY FOR THE REST OF TEST.

19-007 KCDH SSFE CES MATE
LOAD AND RUN MATE SCRIPT
MEIT3_MATE_CMDS
INDEX: 0X006B

CMD: JPM_CDH_JCP_A_SHUTDN
PUI: JSDD96IM0264K

GMT _____:_____:_____(HR:MIN:SEC)

RELEASED - Printed documents may be obsolete; validate prior to use.

SECTION IV - OPERATION INSTRUCTIONS

SEQ/STEP	CMD	RESP	DESCRIPTION	VERIF.
19-008	KCDH		TCMS (SECONDARY JCP INFORMATION) VERIFY: 1. JCP MODE – COLD STDBY ENG: STAND_BY_JCP MODE PUI: JSDC00SWZC10J 2. PWR STATUS – OP ENG: STAND_BY_JCP CNTLR POWER STATUS PUI: JSDC00SWZC1AJ	
				NOT PERFORMED:_____ (PREVIOUS 2 STEPS)
19-009	TIE PTC 052	PTC DKQM	JCP-A STANDBY ACTIVATION COMPLETE. GMT ____:____:____ (DAY:HR:MIN)	
				NV:_____

RELEASED - Printed documents may be obsolete; validate prior to use.

SECTION IV - OPERATION INSTRUCTIONS

SEQ/STEP	CMD	RESP	DESCRIPTION	VERIF.
20-000			**JCP-A STANDBY DEACTIVATION**	
20-001	PTC	DKQM	RECORD THE FOLLOWING INFORMATION: PROCEDURE/SEQ/STEP THAT CALLED THIS INSTRUCTION _____ GMT ____:____:____ (DAY:HR:MIN)	
				NV:_____
			NOTE THE FOLLOWING SEQUENCE WILL DEACTIVATE PDB-DMS1 TO DEACTIVATE JCP A. **NOTE** PEFORM THE NEXT 2 STEPS IF JCP_A STATUS IS HOT STNDBY.	
20-002	KCDH	SSFE	CES MATE LOAD AND RUN MATE SCRIPT MEIT3_MATE_CMDS INDEX: 0X006B CMD: JPM_CDH_JCP_A_SHUTDN PUI: JSDD96IM0264K GMT _____:_____:_____(HR:MIN:SEC)	
20-003	KCDH		TCMS (SECONDARY JCP INFORMATION) VERIFY: 1. JCP MODE – COLD STDBY ENG: STAND_BY_JCP MODE PUI: JSDC00SWZC10J 2. PWR STATUS – OP ENG: STAND_BY_JCP CNTLR POWER STATUS PUI: JSDC00SWZC1AJ	
				NOT PERFORMED:_____ (PREVIOUS 2 STEPS)

RELEASED - Printed documents may be obsolete; validate prior to use.

SECTION IV - OPERATION INSTRUCTIONS

SEQ/STEP	CMD	RESP	DESCRIPTION	VERIF.
20-004	KCDH		TCMS (ACTIVE JCP DISPLAY) RECORD 1. JCP-A: MPC\BIC RPC POSN – _____ ENG: PDB_DMS1 RPC1 POWER STATUS PUI: JSDC00FCP50CJ 2. JCP-A: EDSU-RPC POSN – _____ ENG: PDB_DMS1 RPC7 POWER STATUS PUI: JSDC00FCP50IJ **NOTE** PEFORM THE NEXT 4 STEPS IF PDB_DMS1 RPC 1 AND RPC 7 POWER STATUS INDICATES CLOSED. **CAUTION** WAIT 120 SECONDS BEFORE ISSUING THE NEXT COMMAND TO PREVENT POSSIBLE DAMAGE TO JCP HARD DRIVE	
20-005	KCDH	SSFE	CES MATE LOAD AND RUN MATE SCRIPT MEIT3_MATE_CMDS INDEX: 0X0088 CMD: JPM_EPS_PDB_A_DMS1_RPC01_(JCP_A_MPC/BIC)_OP PUI: JSPX96IM0522K GMT _____:_____:_____(HR:MIN:SEC)	

RELEASED - Printed documents may be obsolete; validate prior to use.

SECTION IV - OPERATION INSTRUCTIONS

SEQ/STEP	CMD	RESP	DESCRIPTION	VERIF.
20-006	KCDH		TCMS (ACTIVE JCP DISPLAY) VERIFY JCP-A: MPC\BIC RPC POSN – OP ENG: PDB_DMS1 RPC1 POWER STATUS PUI: JSDC00FCP50CJ	
20-007	KCDH	SSFE	CES MATE LOAD AND RUN MATE SCRIPT MEIT3_MATE_CMDS INDEX: 0X008A CMD: JPM_EPS_PDB_A_DMS1_RPC07_(JCP_A_EDSU)_OP PUI: JSPX96IM0524K GMT _____:_____:_____(HR:MIN:SEC)	
20-008	KCDH		TCMS (ACTIVE JCP DISPLAY) VERIFY: JCP-A: EDSU-RPC POSN – OP ENG: PDB_DMS1 RPC7 POWER STATUS PUI: JSDC00FCP50IJ	
				NOT PERFORMED:_____ (PREVIOUS 4 STEPS)
20-009	KCDH	SSFE	CES MATE LOAD AND RUN MATE SCRIPT MEIT3_MATE_CMDS INDEX: 0X00A1 CMD: JPM_EPS_PDU_A1_RPC10_(PDB_A_DMS1)_OP PUI: JSPX96IM0756K GMT _____:_____:_____(HR:MIN:SEC)	
20-010	KCDH		TCMS (SYS LOCAL BUS 1: AV STR A-2) VERIFY PDU A1 – BOX HEADER GRAY, INDICATING OFF ENG: SYS_PDU_A RPC10 POWER STATUS PUI: JSDC00FCPH0PJ	
20-011	TIE PTC 052	PTC DKQM	JCP-A STANDBY DEACTIVATION COMPLETE. GMT ____:____:____ (DAY:HR:MIN)	

NV:_____

RELEASED - Printed documents may be obsolete; validate prior to use.

SECTION IV - OPERATION INSTRUCTIONS

SEQ/STEP	CMD	RESP	DESCRIPTION	VERIF.
21-000			**JCP-B STANDBY ACTIVATION**	
21-001	PTC	DKQM	RECORD THE FOLLOWING INFORMATION: PROCEDURE/SEQ/STEP THAT CALLED THIS INSTRUCTION _____ GMT ____:____:____ (DAY:HR:MIN)	
				NV:_____
			NOTE THE FOLLOWING SEQUENCE WILL ACTIVATE PDB-DMS2 TO ACTIVATE JCP B AND CONFIGURE TO STANDBY AFTER THE COMMON ACTIVATION SEQUENCE (JCP-A PRIMARY) IS COMPLETE.	
			NOTE WHEN PDU B1 RPC 3 IS CLOSED, JCP B IS POWERED AUTOMATICALLY VIA NORMALLY CLOSED RELAYS PDB_DMS2 RPC1 (JCP B MPC/BIC) AND RPC 7 (JCP_B EDSU)	
21-002	KCDH	SSFE	CES MATE LOAD AND RUN MATE SCRIPT MEIT3_MATE_CMDS INDEX: 0X00A5 CMD: JPM_EPS_PDU_B1_RPC03_(PDB_B_DMS2)_CL PUI: JSPX96IM0766K GMT _____:_____:_____(HR:MIN:SEC)	

RELEASED - Printed documents may be obsolete; validate prior to use.

SECTION IV - OPERATION INSTRUCTIONS

SEQ/STEP	CMD	RESP	DESCRIPTION	VERIF.
21-003	KCDH		TCMS (SYS LOCAL BUS 1: AV STR B-2) 1. PDU B1 – BOX HEADER GREEN, INDICATING ON ENG: SYS_PDU_B RPC3 POWER STATUS PUI: JSDC00FCPI0LJ 2. PDB_DMS2 DF STAT – CURRENT ENG: PDB_DMS2 DF STATUS PUI: JSDC00SWP620J 3. DMS 2 HLTH STAT SUM - NORMAL ENG: PDB_DMS2 HEALTH STATUS SUMMARY PUI: JSDC00FCP600J ACTIVE JCP DISPLAY 4. JCP-B: MPC\BIC RPC POSN – CL ENG: PDB_DMS2 RPC1 POWER STATUS PUI: JSDC00FCP60CJ 5. JCP-B: EDSU-RPC POSN - CL ENG: PDB_DMS2 RPC7 POWER STATUS PUI: JSDC00FCP60IJ	

RELEASED - Printed documents may be obsolete; validate prior to use.

SECTION IV - OPERATION INSTRUCTIONS

SEQ/STEP	CMD	RESP	DESCRIPTION	VERIF.

NOTE

IT WILL TAKE APPROXIMATELY 6 MINUTES FROM JCP POWER ON UNTIL HOT STANDBY MODE IS REACHED.

VERIFICATIONS OF THE FOLLOWING STEP CANNOT BE COMPLETED UNTIL JCP IS IN HOT STANDBY MODE.

A FATAL ERROR INDICATION WILL OCCUR FOR APPROXIMATELY 1 MINUTE WHILE JCP SELF-TEST (BIT) IS RUNNING.

21-004 KCDH

TCMS (SECONDARY JCP INFORMATION)
VERIFY

1. PWR STATUS – ON
   ENG: STAND_BY_JCP CNTLR POWER STATUS
   PUI: JSDC00SWZC1AJ

2. STAND BY JCP MODE – HOT STAND BY
   ENG: STAND_BY_JCP MODE
   PUI: JSDC00SWZC10J

3. RECORD DF STATUS STANDBY JCP1 - _____
   ENG: STANDBY_JCP1 DF STATUS
   PUI: JSDC00SWZC01J

4. RECORD DF STATUS STANDBY JCP2 – _____
   ENG: STANDBY_JCP2 DF STATUS
   PUI: JSDC00SWZC02J

5. RECORD DF STATUS STANDBY JCP3 – _____
   ENG: STANDBY_JCP3 DF STATUS
   PUI: JSDC00SWZC03J

6. RECORD DF STATUS STANDBY JCP4 – _____
   ENG: STANDBY_JCP4 DF STATUS
   PUI: JSDC00SWZC04J

RELEASED - Printed documents may be obsolete; validate prior to use.

SECTION IV - OPERATION INSTRUCTIONS

SEQ/STEP	CMD	RESP	DESCRIPTION	VERIF.
			NOTE PERFORM THE NEXT 2 STEPS IF JCP-A WILL BE LEFT IN A HOT STANDBY CONFIGURATION.	
21-005	KCDH	SSFE	CES MATE LOAD AND RUN MATE SCRIPT MEIT3_MATE_CMDS INDEX : 0X005B CMD: JPM_CDH_ACTIVE_JCP_EVENT_DET_ENA_TMPLT PUI: JSDD96IM0227K PARAMETER 1: JCP_B COMMUNICATION ERROR (92) GMT _____:_____:_____(HR:MIN:SEC)	
21-006	KCDH		TCMS (ACTIVE JCP HEALTH AND STATUS) VERIFY JCP B COM ERROR - ENABLE ENG: EVENT INHIBIT FLAG(JCP_B COMMUNICATION ERROR) PUI: JSDC00SWZ326J	
				NOT PERFORMED:_____ (PREVIOUS 2 STEPS)
			PERFORM STANDBY JCP SHUTDOWN	
			NOTE PERFORM THE FOLLOWING 2 STEPS IF JCP-B IS REQUIRED TO BE IN COLD STNDBY FOR THE REST OF TEST.	
21-007	KCDH	SSFE	CES MATE LOAD AND RUN MATE SCRIPT MEIT3_MATE_CMDS INDEX: OX006E ENG: JPM_CDH_JCP_B_SHUTDN PUI: JSDD96IM0269K GMT ____:____:____ (DAY:HR:MIN)	

RELEASED - Printed documents may be obsolete; validate prior to use.

SECTION IV - OPERATION INSTRUCTIONS

SEQ/STEP	CMD	RESP	DESCRIPTION	VERIF.
21-008	KCDH		TCMS (SECONDARY JCP INFORMATION) VERIFY: 1. JCP MODE – COLD_STBY ENG: STAND_BY_JCP MODE PUI: JSDC00SWZC10J 2. PWR STATUS - OFF ENG: STAND_BY JCP CNTLR POWER STATUS PUI: JSDC00SWZC1AJ	
				NOT PERFORMED:_____ (PREVIOUS 2 STEPS)
21-009	TIE PTC 052	PTC DKQM	JCP-B STANDBY ACTIVATION COMPLETE. GMT ____:____:____ (DAY:HR:MIN)	
				NV:_____

RELEASED - Printed documents may be obsolete; validate prior to use.

SECTION IV - OPERATION INSTRUCTIONS

SEQ/STEP	CMD	RESP	DESCRIPTION	VERIF.
22-000			**JCP-B STANDBY DEACTIVATION**	
22-001	PTC	DKQM	RECORD THE FOLLOWING INFORMATION: PROCEDURE/SEQ/STEP THAT CALLED THIS INSTRUCTION _____ GMT ____:____:____ (DAY:HR:MIN)	
				NV:_____
			NOTE THE FOLLOWING SEQUENCE WILL DEACTIVATE PDB-DMS2 TO DEACTIVATE JCP B.	
			NOTE PERFORM THE NEXT 2 STEPS IF JCP B STATUS SHOWS HOT STANDBY.	
22-002	KCDH	SSFE	CES MATE LOAD AND RUN MATE SCRIPT MEIT3_MATE_CMDS INDEX: OX006E ENG: JPM_CDH_JCP_B_SHUTDN PUI: JSDD96IM0269K GMT ____:____:____ (DAY:HR:MIN)	
22-003	KCDH		TCMS (SECONDARY JCP INFORMATION) VERIFY: 1. JCP MODE – COLD_STBY ENG: STAND_BY_JCP MODE PUI: JSDC00SWZC10J 2. PWR STATUS - OFF ENG: STAND_BY JCP CNTLR POWER STATUS PUI: JSDC00SWZC1AJ	
				NOT PERFORMED:_____ (PREVIOUS 2 STEPS)

RELEASED - Printed documents may be obsolete; validate prior to use.

SECTION IV - OPERATION INSTRUCTIONS

SEQ/STEP	CMD	RESP	DESCRIPTION	VERIF.
22-004	KCDH		TCMS (ACTIVE JCP DISPLAY) RECORD: 1. JCP-B: MPC\BIC RPC POSN – _____ ENG: PDB_DMS2 RPC1 POWER STATUS PUI: JSDC00FCP60CJ 2. JCP-B: EDSU-RPC POSN – _____ ENG: PDB_DMS2 RPC7 POWER STATUS PUI: JSDC00FCP60IJ **NOTE** PEFORM THE NEXT 4 STEPS IF PDB_DMS1 RPC 1 AND RPC 7 POWER STATUS INDICATES CLOSED. **CAUTION** WAIT 120 SECONDS BEFORE ISSUING THE NEXT COMMAND TO PREVENT POSSIBLE DAMAGE TO JCP HARD DRIVE.	
22-005	KCDH	SSFE	CES MATE LOAD AND RUN MATE SCRIPT MEIT3_MATE_CMDS INDEX: 0X008C ENG: JPM_EPS_PDB_B_DMS2_RPC01_(JCP_B_MPC/BIC)_OP PUI: JSPX96IM0530K GMT ____:____:____ (DAY:HR:MIN)	
22-006	KCDH		TCMS (ACTIVE JCP DISPLAY) VERIFY: JCP-B: MPC\BIC RPC POSN – OP ENG: PDB_DMS2 RPC1 POWER STATUS PUI: JSDC00FCP60CJ	
22-007	KCDH	SSFE	CES MATE LOAD AND RUN MATE SCRIPT MEIT3_MATE_CMDS INDEX: 0X008E ENG: JPM_EPS_PDB_B_DMS2_RPC07_(JCP_B_EDSU)_OP PUI: JSPX96IM0532K GMT ____:____:____ (DAY:HR:MIN)	
22-008	KCDH		TCMS (ACTIVE JCP DISPLAY) VERIFY JCP-B: EDSU-RPC POSN – OP ENG: PDB_DMS2 RPC7 POWER STATUS PUI: JSDC00FCP60IJ	

RELEASED - Printed documents may be obsolete; validate prior to use.

SECTION IV - OPERATION INSTRUCTIONS

SEQ/STEP	CMD	RESP	DESCRIPTION	VERIF.

NOT PERFORMED:_____
(PREVIOUS 4 STEPS)

RELEASED - Printed documents may be obsolete; validate prior to use.

SECTION IV - OPERATION INSTRUCTIONS

SEQ/STEP	CMD	RESP	DESCRIPTION	VERIF.
22-009	KCDH	SSFE	CES MATE LOAD AND RUN MATE SCRIPT MEIT3_MATE_CMDS INDEX: 0X00A9 CMD: JPM_EPS_PDU_B1_RPC03_(PDB_B_DMS2)_OP PUI: JSPX96IM0776K GMT _____:_____:_____(HR:MIN:SEC)	
22-010	KCDH		TCMS (SYS LOCAL BUS 1: AV STR B-2) VERIFY: PDU B1 – BOX HEADER GRAY, INDICATING OFF ENG: SYS_PDU_B RPC3 POWER STATUS PUI: JSDC00FCPI0LJ	
22-011	TIE PTC 052	PTC DKQM	JCP-B STANDBY DEACTIVATION COMPLETE. GMT _____:_____:_____ (DAY:HR:MIN)	

NV:_____

RELEASED - Printed documents may be obsolete; validate prior to use.

SECTION IV - OPERATION INSTRUCTIONS

SEQ/STEP	CMD	RESP	DESCRIPTION	VERIF.
23-000			**JCP SWITCHOVER (JCP A ACTIVE TO JCP B ACTIVE)**	
23-001	PTC	DKQM	RECORD THE FOLLOWING INFORMATION: PROCEDURE/SEQ/STEP THAT CALLED THIS INSTRUCTION _____ GMT _____:_____:_____ (DAY:HR:MIN)	
				NV:_____

CAUTION

DO NOT PERFORM OTHER JEM SYSTEM COMMANDING UNTIL SUCCESSFUL COMPLETION OF THIS SEQUENCE.

23-002	PTC	ALL	VERIFY READY FOR JCP SWITCHOVER ALL SYSTEM COMMANDING WILL STOP UNTIL NOTIFIED.	
			VERIFY/INHIBIT JCP B FDIR	
23-003	KCDH		TCMS(DMON) RECORD RT FDIR STATUS RT 19 JCP-B - _____ PUI: LADP01MDAVUOJ	

RELEASED - Printed documents may be obsolete; validate prior to use.

SECTION IV - OPERATION INSTRUCTIONS

SEQ/STEP	CMD	RESP	DESCRIPTION	VERIF.

NOTE

PERFORM THE FOLLOWING STEP IF JCP B FDIR STATUS WAS RECORDED AS ENABLED IN THE PREVIOUS STEP

23-004 KCDH MS1 PCS
JPM:CDH OVERVIEW:CB EXT-2:RT STATUS

'CB EXT 2 RT STATUS'

'RT FDIR STATUS'

1. CMD: 19 JCP B INHIBIT FDIR
   OPS: PRIM_CCS_INH_RT_FDIR_TMPLT
   PUI: LADD96IM0770K

   GMT _____:_____:_____ (HR:MIN:SEC)

2. VERIFY: 19 JCP B RT FDIR STATUS – INH
   OPS:
   PRIM_CCS_CB_EXT_2_RT_FDIR_INH_JCP_2_RT_19
   PUI: LADP01MDAVUOJ

NOT PERFORMED:_____

VERIFY/INHIBIT JCP A FDIR

23-005 KCDH TCMS(DMON)
RECORD:
RT FDIR STATUS

RT 19 JCP-A - _____
PUI: LADP01MDAVWXJ

RELEASED - Printed documents may be obsolete; validate prior to use.

SECTION IV - OPERATION INSTRUCTIONS

SEQ/STEP	CMD	RESP	DESCRIPTION	VERIF.

NOTE

PERFORM THE FOLLOWING STEP IF JCP A FDIR STATUS WAS RECORDED AS ENABLED IN THE PREVIOUS STEP

23-006 KCDH MS1 PCS
JPM:CDH OVERVIEW:CB EXT-1:RT STATUS

'CB EXT 1 RT STATUS'

'RT FDIR STATUS'

1. CMD: 19 JCP A INHIBIT FDIR
   OPS: PRIM_CCS_INH_RT_FDIR_TMPLT
   PUI: LADD96IM0770K

   GMT _____:_____:_____ (HR:MIN:SEC)

2. VERIFY: 19 JCP B RT FDIR STATUS – INH
   OPS:
   PRIM_CCS_CB_EXT_1_RT_FDIR_INH_JCP_1_RT_19
   PUI: LADP01MDAVWXJ

RECORD/INHIBIT RT I/O FOR JCP B

23-007 KCDH TCMS (DMON)
RECORD:
RT I/O STATUS
19 JCP-B _____
PUI: LADP01MDAVUKJ

NOTE

PERFORM THE FOLLOWING STEP IF JCP B RT I/O STATUS WAS RECORDED AS ENABLED IN THE PREVIOUS STEP

23-008 KCDH MS1 PCS
JPM:CDH OVERVIEW:CB EXT-2:RT STATUS

'CB EXT 2 RT STATUS'

'RT STATUS'

1. CMD: 19 JCP B RT STATUS - INHIBIT
   OPS: PRIM_CCS_INH_RT_TMPLT
   PUI: LADD96IM1019K

   GMT _____:_____:_____ (HR:MIN:SEC)

2. VERIFY: 19 JCP B RT STATUS – INH
   OPS:
   PRIM_CCS_CB_EXT_2_RT_FDIR_INH_JCP_2_RT_19

RELEASED - Printed documents may be obsolete; validate prior to use.

SECTION IV - OPERATION INSTRUCTIONS

SEQ/STEP	CMD	RESP	DESCRIPTION	VERIF.

PUI: LADP01MDAVUOJ

RELEASED - Printed documents may be obsolete; validate prior to use.

SECTION IV - OPERATION INSTRUCTIONS

SEQ/STEP	CMD	RESP	DESCRIPTION	VERIF.
			VERIFY JCP A ACTIVE	
23-009	KCDH		TCMS (ACTIVE JCP) ACTIVE JCP – A_LINE ENG: OODT_DATA LINE OF ACTIVE_JCP PUI: JSDC00SWZ712J	
			TRANSITIONING JCP B FROM COLD STANDBY TO HOT STANDBY.	
23-010	KCDH	MS1	PCS JPM:CDH OVERVIEW:JCP B 'STANDBY JCP' RECORD STAND BY JPC MODE - _____ ENG: STAND_BY_JCP MODE PUI: JSDC00SWZC10J **NOTE** PERFORM THE FOLLOWING 2 STEPS IF STDBY_JCP_MODE RECORDED IN THE PREVIOUS STEP WAS COLD STANDBY. **NOTE** IT TAKES UP TO 5 MINUTES TO COMPLETE TRANSITION JCP TO HOT - STANDBY	
23-011	KCDH	SSFE	CES MATE LOAD AND RUN MATE SCRIPT MEIT3_MATE_CMDS INDEX: 0X006D CMD: JPM_CDH_JCP_B_PWR_ON_TMPLT PUI: JSDD96IM0267K GMT _____:_____:_____ (HR:MIN:SEC)	

RELEASED - Printed documents may be obsolete; validate prior to use.

SECTION IV - OPERATION INSTRUCTIONS

SEQ/STEP	CMD	RESP	DESCRIPTION	VERIF.
23-012	KCDH		TCMS (JPM STANDBY JCP INFORMATION) 'STANDBY JCP INFO' VERIFY: 1. POWER STATUS – ON ENG: STAND_BY_JCP CNTLR POWER STATUS PUI: JSDC00SWZC1AJ 2. JCP MODE – HOT_STANDBY ENG: STAND_BY_JCP MODE PUI: JSDC00SWZC10J 'DF STATUS' 3. STANDBY JCP1 – CURRENT ENG: STANDBY_JCP1 DF STATUS PUI: JSDC00SWZC01J 4. STANDBY JCP2 – CURRENT ENG: STANDBY_JCP2 DF STATUS PUI: JSDC00SWZC02J 5. STANDBY JCP3 – CURRENT ENG: STANDBY_JCP3 DF STATUS PUI: JSDC00SWZC03J 6. STANDBY JCP 4 – CURRENT ENG: STANDBY_JCP4 DF STATUS PUI: JSDC00SWZC04J 7. S/W LOGICAL VERSION – DEFAULT ENG: STAND_BY_SOC PROGRAM VERSION PUI: JSDC00SWZC0CJ 8. OODT LOGICAL VERSION – CONTINUOUS DEFAULT ENG: STAND_BY_SOC OODT LOGICAL VERSION PUI: JSDC00SWZC09J	
				NOT PERFORMED:_____ (PREVIOUS 2 STEPS)
23-013	KCDH		RECORD JEM CONFIGURATION PER R2009 APPENDIX D.	

RELEASED - Printed documents may be obsolete; validate prior to use.

SECTION IV - OPERATION INSTRUCTIONS

SEQ/STEP	CMD	RESP	DESCRIPTION	VERIF.
			PERFORM JCP SWITCHOVER (JCP B TO ACTIVE JCP)	
23-014	PTC	ALL	VERIF Y ALL SYSTEMS READY TO PROCEED WITH JCP SWITCHOVER.	
			NOTE 1. IT TAKES APPROXIMATELY 1 MINUTE FOR JCP_A TO GO TO TRANISTIONING MODE. 2. EXPECT USOS MESSAGE ‘PRIMARY CC MDM DETECT LOSS OF DOM WITH JCP-JPM’ WHEN JCP_A GOES TO TRANSITIONING MODE. 3. IT TAKES APPROXIMATELY 4 MINUTES TO COMPLETE FAS 113.	
23-015	KCDH	SSFE	CES MATE LOAD AND RUN MATE SCRIPT MEIT3_MATE_CMDS INDEX: 0X006C CMD: JPM_CDH_JCP_B_TO_ACTIVE_JCP_SWITCHOVER PUI: JSDD96IM0266K GMT _____:_____:_____ (HR:MIN:SEC)	
23-016	KCDH		TCMS (JPM ACTIVE JCP INFORMATION) ‘ACTIVE JCP’ VERIFY- FRM CNTR – “NOT INCREMENTING” ENG: FRAME COUNTER PUI: JSDC00SWZ999U	

RELEASED - Printed documents may be obsolete; validate prior to use.

SECTION IV - OPERATION INSTRUCTIONS

SEQ/STEP	CMD	RESP	DESCRIPTION	VERIF.

NOTE

EXPECT US C&W MESSAGE ‘ PRIMARY CC MDM DETECT LOSS OF COM WITH JCP_A -JPM

RECONFIGURE C&C MDM COMMUNICATION FROM EXT 1 TO EXT 2

23-017 KCDH MS1 PCS
C&DH:PRIMARY C&C MDM:CB-EXT-1:RT STATUS

‘CB-EXT-1 RT STATUS’

1. CMD: RT STATUS I/O INHIBIT FOR THE FOLLOWING RT

   RT 19 JCP-A
   OPS: PRIM_CCS_INH_RT_TMPLT
   PUI: LADD96IM1019K

   GMT _____:_____:_____ (HR:MIN:SEC)

2. VERIFY
   RT 19 JCP-A RT STATUS – INH
   OPS: Prim_CCS_CB_EXT_1_RT_Ena_JCP_1_RT_19
   PUI: LADP01MDAVWTJ

23-018 KCDH MS1 PCS
C&DH:PRIMARY C&C MDM:CB-EXT-2:RT STATUS

‘CB-EXT-2 RT STATUS’

1. CMD: RT STATUS I/O ENABLE FOR THE FOLLOWING RT
   19 JCP-B
   OPS: PRIM_CCS_ENA_RT_TMPLT
   PUI: LADD96IM1018K

   GMT _____:_____:_____ (HR:MIN:SEC)

2. VERIFY: 19 JCP-B RT STATUS – ENA
   OPS: PRIM_CCS_CB_EXT_2_RT_ENA_JCP_2_RT_19
   PUI: LADP01MDAVUKJ

23-019 KCDH MS1 PCS(C&W SUMMARY PAGE)
VERIFY
‘PRIMARY CC MDM DETECT LOSS OF COMMM WITH JCP-JPM’ IS CLEARED.

RELEASED - Printed documents may be obsolete; validate prior to use.

SECTION IV - OPERATION INSTRUCTIONS

SEQ/STEP	CMD	RESP	DESCRIPTION	VERIF.

NOTE

THE FOLLOWING STEP MAY TAKE UP TO 5 MINUTES TO VERIFY.

VERIFY JCP SWITCHOVER

23-020 KCDH

TCMS (FAS MESSAGE PAGE)
VERIFY

1. FAS SYSTEM SERVICES STARTED
   ENG: MESSAGE ID BOX(TO GROUND) 1
   PUI: JSDC00SWZ62AJ

2. FINISHED FAS0113 (SYSTEM SETUP SEUENCE IN JCP ACTIVATION)
   ENG: MESSAGE ID BOX (TO GROUND) 1
   PUI: JSDC00SWZ62AJ

23-021 KCDH

TCMS (JPM ACTIVE JCP HLTH & STAT)
'ACTIVE JCP'

1. FRM CNTR – "INCREMENTING"
   ENG: FRAME COUNTER
   PUI: JSDC00SWZ999U
2. ACTIVE JCP - JCP-B
   ENG: OODT_DATA LINE OF ACTIVE_JCP
   PUI: JSDC00SWZ712J

   'STANDBY JCP INFO'

3. STNDBY JCP MODE – COLD_STANDBY
   ENG: STAND_BY_JCP MODE
   PUI: JSDC00SWZC10J

23-022 KCDH

TCMS (ACTIVE JCP HLTH & STAT)
'SOFTWARE STATUS'

1. SOFTWARE VERSION - DEFAULT
   ENG: OODT_DATA ACTIVE_JCP PROGRAM VERSION
   PUI: JSDC00SWZ714J

2. LOGICAL VERSION – CONTINUOUS DEFAULT
   ENG: OODT_DATA ACTIVE_JCP OODT VERSION
   PUI: JSDC00SWZ711J

   RECORD:
3. OODT REVISION- _____(BD)
   ENG: OODT_DATA ACTIVE_JCP OODT VALUE VERSION
   PUI: JSDC00SWZ719U

RELEASED - Printed documents may be obsolete; validate prior to use.

SECTION IV - OPERATION INSTRUCTIONS

SEQ/STEP	CMD	RESP	DESCRIPTION	VERIF.
			CHECK JEM DATA PARAMTER LISTS	
23-023	TIE	ALL	VERIFY JEM CONFIGURATION PER R2009 APPENDIX D. REPORT COMPLETE.	
			ENABLE BUS FDIR FOR JCP B	
23-024	KCDH	MS1	PCS C&DH:PRIMARY C&C MDM:CB-EXT-2:RT STATUS 'CB EXT 2 RT STATUS' 'RT FDIR STATUS' 1. CMD: 19 JCP B RT FDIR STATUS -ENABLE FDIR OPS: PRIM_CCS_ENA_RT_FDIR_TMPLT PUI: LADD96IM0769K GMT _____:_____:_____ (HR:MIN:SEC) 2. VERIFY: JCP B RT FDIR STATUS – ENA OPS: PRIM_CCS_CB_EXT_2_RT_FDIR_INH_JCP_2_RT_19 PUI: LADP01MDAVUOJ 19 JCP-B PUI: LADP01MDAVUOJ	
23-025	TIE PTC 052	PTC DKQM	JCP SWITCHOVER (JCP A TO JCP B ACTIVE) COMPLETE. GMT _____:_____:_____ (DAY:HR:MIN)	

NV:_____

RELEASED - Printed documents may be obsolete; validate prior to use.

SECTION IV - OPERATION INSTRUCTIONS

SEQ/STEP	CMD	RESP	DESCRIPTION	VERIF.
24-000			**JCP SWITCHOVER (JCP B ACTIVE TO JCP A ACTIVE)**	
24-001	PTC	DKQM	RECORD THE FOLLOWING INFORMATION: PROCEDURE/SEQ/STEP THAT CALLED THIS INSTRUCTION _____ GMT _____:_____:_____ (DAY:HR:MIN)	NV:_____

CAUTION

DO NOT PERFORM OTHER JEM SYSTEM COMMANDING UNTIL SUCCESSFUL COMPLETION OF THIS SEQUENCE.

24-002	PTC	ALL	VERIFY READY FOR JCP SWITCHOVER ALL SYSTEM COMMAND WILL STOP UNTIL NOTIFIED.	
			VERIFY/INHIBIT FDIR BETWEEN JCP A/B	
24-003	KCDH		TCMS(DMON) RECORD RT FDIR STATUS RT 19 JCP-B - _____ PUI: LADP01MDAVUOJ	

NOTE

PERFORM THE FOLLOWING STEP IF JCP B FDIR STATUS WAS RECORDED AS ENABLED IN THE PREVIOUS STEP

24-004	KCDH	MS1	PCS JPM:CDH OVERVIEW:CB EXT-2:RT STATUS ‘CB EXT 2 RT STATUS’ ‘RT FDIR STATUS’ 1. CMD: 19 JCP B INHIBIT FDIR OPS: PRIM_CCS_INH_RT_FDIR_TMPLT PUI: LADD96IM0770K GMT _____:_____:_____ (HR:MIN:SEC) 2. VERIFY: 19 JCP B RT FDIR STATUS – INH OPS: PRIM_CCS_CB_EXT_2_RT_FDIR_INH_JCP_2_RT_19 PUI: LADP01MDAVUOJ	NOT PERFORMED:_____

RELEASED - Printed documents may be obsolete; validate prior to use.

SECTION IV - OPERATION INSTRUCTIONS

SEQ/STEP	CMD	RESP	DESCRIPTION	VERIF.

RELEASED - Printed documents may be obsolete; validate prior to use.

SECTION IV - OPERATION INSTRUCTIONS

SEQ/STEP	CMD	RESP	DESCRIPTION	VERIF.
			VERIFY/INHIBIT JCP A FDIR	
24-005	KCDH		TCMS(DMON): RECORD: RT FDIR STATUS RT 19 JCP-A - _____ PUI: LADP01MDAVWXJ	
			NOTE PERFORM THE FOLLOWING STEP IF JCP A FDIR STATUS WAS RECORDED AS ENABLED IN THE PREVIOUS STEP	
24-006	KCDH	MS1	PCS JPM:CDH OVERVIEW:CB EXT-1:RT STATUS ‘CB EXT 1 RT STATUS’ ‘RT FDIR STATUS’ 1. CMD: 19 JCP A INHIBIT FDIR OPS: PRIM_CCS_INH_RT_FDIR_TMPLT PUI: LADD96IM0770K GMT _____:_____:_____ (HR:MIN:SEC) 2. VERIFY: 19 JCP B RT FDIR STATUS – INH OPS: PRIM_CCS_CB_EXT_1_RT_FDIR_INH_JCP_1_RT_19 PUI: LADP01MDAVWXJ	
			RECORD/INHIBIT RT I/O FOR JCP B	
24-007	KCDH		TCMS (DMON) RECORD: RT I/O STATUS 19 JCP-A _____ PUI: LADP01MDAVWTJ	

RELEASED - Printed documents may be obsolete; validate prior to use.

SECTION IV - OPERATION INSTRUCTIONS

SEQ/STEP	CMD	RESP	DESCRIPTION	VERIF.

NOTE

PERFORM THE FOLLOWING STEP IF JCP A RT I/O STATUS WAS RECORDED AS ENABLED IN THE PREVIOUS STEP

24-008 KCDH MS1 PCS
JPM:CDH OVERVIEW:CB EXT-1:RT STATUS

'CB EXT 1 RT STATUS'

'RT STATUS'

1. CMD: 19 JCP A RT STATUS - INHIBIT
   OPS: PRIM_CCS_INH_RT_TMPLT
   PUI: LADD96IM1019K

   GMT _____:_____:_____ (HR:MIN:SEC)

2. VERIFY: 19 JCP A RT STATUS – INH
   OPS:
   PRIM_CCS_CB_EXT_2_RT_FDIR_INH_JCP_1_RT_19
   PUI: LADP01MDAVWTJ_

VERIFY JCP B ACTIVE

24-009 KCDH TCMS (ACTIVE JCP)
ACTIVE JCP –B_LINE
ENG: OODT_DATA LINE OF ACTIVE_JCP
PUI: JSDC00SWZ712J

TRANSITIONING JCP A FROM COLD STANDBY TO HOT STANDBY.

24-010 KCDH MS1 PCS
JPM:CDH OVERVIEW:JCP A

'STANDBY JCP'

RECORD STAND BY JCP MODE - _____
ENG: STAND_BY_JCP MODE
PUI: JSDC00SWZC10J

RELEASED - Printed documents may be obsolete; validate prior to use.

SECTION IV - OPERATION INSTRUCTIONS

SEQ/STEP	CMD	RESP	DESCRIPTION	VERIF.
			NOTE PERFORM THE FOLLOWING 2 STEPS IF STDBY_JCP_MODE RECORDED IN THE PREVIOUS STEP WAS COLD STANDBY.	
			NOTE IT TAKES UP TO 5 MINUTES TO COMPLETE TRANSITION JCP TO HOT STANDBY	
24-011	KCDH	SSFE	CES MATE LOAD AND RUN MATE SCRIPT MEIT3_MATE_CMDS INDEX: 0X00AE CMD: JPM_CDH_JCP_A_PWR_ON_TMPLT PUI: JSPX96IM0822K GMT _____:_____:_____ (HR:MIN:SEC)	

RELEASED - Printed documents may be obsolete; validate prior to use.

SECTION IV - OPERATION INSTRUCTIONS

SEQ/STEP	CMD	RESP	DESCRIPTION	VERIF.
24-012	KCDH		TCMS (JPM STANDBY JCP INFORMATION) 'STANDBY JCP INFO' VERIFY: 1. POWER STATUS – ON ENG: STAND_BY_JCP CNTLR POWER STATUS PUI: JSDC00SWZC1AJ 2. JCP MODE – HOT_STANDBY ENG: STAND_BY_JCP MODE PUI: JSDC00SWZC10J 'DF STATUS' 3. STANDBY JCP1 – CURRENT ENG: STANDBY_JCP1 DF STATUS PUI: JSDC00SWZC01J 4. STANDBY JCP2 – CURRENT ENG: STANDBY_JCP2 DF STATUS PUI: JSDC00SWZC02J 5. STANDBY JCP3 – CURRENT ENG: STANDBY_JCP3 DF STATUS PUI: JSDC00SWZC03J 6. STANDBY JCP 4 – CURRENT ENG: STANDBY_JCP4 DF STATUS PUI: JSDC00SWZC04J 7. S/W LOGICAL VERSION – DEFAULT ENG: STAND_BY_SOC PROGRAM VERSION PUI: JSDC00SWZC0CJ 8. OODT LOGICAL VERSION – CONTINUOUS DEFAULT ENG: STAND_BY_SOC OODT LOGICAL VERSION PUI: JSDC00SWZC09J	
				NOT PERFORMED:_____ (PREVIOUS 2 STEPS)
24-013	TIE	ALL	TCMS RECORD JEM CONFIGURATION PER R2009 APPENDIX D.	

RELEASED - Printed documents may be obsolete; validate prior to use.

SECTION IV - OPERATION INSTRUCTIONS

SEQ/STEP	CMD	RESP	DESCRIPTION	VERIF.
			PERFORM JCP SWITCHOVER (JCP A TO ACTIVE JCP)	
24-014	KCDH	MS1	PCS C&DH:PRIMARY C&C MDM:CB-EXT-2:RT STATUS 'CB-EXT-1 RT FDIR STATUS' 1. CMD: RT FDIR STATUS INHIBIT FOR THE FOLLOWING RT. RT 19 JCP-B OPS: PRIM_CCS_INH_RT_FDIR_TMPLT PUI: LADD96IM0770K GMT _____:_____:_____ (HR:MIN:SEC) 2. VERIFY RT FDIR STATUS – INH RT 19 JCP-B RT FDIR STATUS - INH PUI: LADP01MDAVUOJ	
24-015	PTC	ALL	VERIFY ALL SYSTEMS READY TO PROCEED WITH JCP SWITCHOVER.	

RELEASED - Printed documents may be obsolete; validate prior to use.

SECTION IV - OPERATION INSTRUCTIONS

SEQ/STEP	CMD	RESP	DESCRIPTION	VERIF.

NOTE

1. IT TAKES APPROXIMATELY 1 MINUTE FOR JCP_A TO GO TO TRANSITIONING MODE.

2. EXPECT USOS MESSAGE ‘PRIMARY CC MDM DETECT LOSS OF DOM WITH JCP-JPM’ WHEN JCP_A GOES TO TRANSITIONING MODE.

3. IT TAKES APPROXIMATELY 4 MINUTES TO COMPLETE FAS 113.

24-016 KCDH SSPF

CES MATE
LOAD AND RUN MATE SCRIPT
MEIT3_MATE_CMDS
INDEX: 0X006F
CMD: JPM_CDH_JCP_A_TO_ACTIVE_JCP_SWITCHOVER
PUI: JSDD96IM0271K

GMT _____:_____:_____ (HR:MIN:SEC)

24-017 KCDH

TCMS (JPM ACTIVE JCP INFORMATION)
‘ACTIVE JCP’
VERIFY-
FRM CNTR – “NOT INCREMENTING”
ENG: FRAME COUNTER
PUI: JSDC00SWZ999U

NOTE

EXPECT US C&W MESSAGE ‘ PRIMARY CC MDM DETECT LOSS OF COM WITH JCP_A -JPM

RECONFIGURE C&C MDM COMMUNICATION FROM EXT 2 TO EXT 1

24-018 KCDH MS1

PCS
C&DH:PRIMARY C&C MDM:CB-EXT-1:RT STATUS

‘CB-EXT-2 RT STATUS’

1. CMD: RT STATUS I/O INHIBIT FOR THE FOLLOWING RT

   RT 19 JCP-B
   OPS: PRIM_CCS_INH_RT_TMPLT
   PUI: LADD96IM1019K

   GMT _____:_____:_____ (HR:MIN:SEC)

2. VERIFY
   RT 19 JPC-B RT STATUS I/O - INH
   PUI: LADP01MDAVUKJ

RELEASED - Printed documents may be obsolete; validate prior to use.

SECTION IV - OPERATION INSTRUCTIONS

SEQ/STEP	CMD	RESP	DESCRIPTION	VERIF.
24-019	KCDH	MS1	PCS C&DH:PRIMARY C&C MDM:CB-EXT-1:RT STATUS 'CB-EXT-1 RT STATUS' 1. CMD: RT STATUS I/O ENABLE FOR THE FOLLOWING RT 19 JCP-A GMT _____:_____:_____ (HR:MIN:SEC) 2. VERIFY RT STATUS I/O - ENA 19 JCP-A PUI: LADP01MDAVWTJ	
24-020	KCDH	MS1	PCS(C&W SUMMARY PAGE) VERIFY 'PRIMARY CC MDM DETECT LOSS OF COMMM WITH JCP-B JPM' IS CLEARED.	

RELEASED - Printed documents may be obsolete; validate prior to use.

SECTION IV - OPERATION INSTRUCTIONS

SEQ/STEP	CMD	RESP	DESCRIPTION	VERIF.

NOTE

THE FOLLOWING STEP MAY TAKE UP TO 5 MINUTES TO VERIFY.

VERIFY JCP SWITCHOVER

24-021 KCDH

TCMS (FAS MESSAGE PAGE)
VERIFY

1. FAS SYSTEM SERVICES STARTED
   ENG: MESSAGE ID BOX(TO GROUND) 1
   PUI: JSDC00SWZ62AJ

2. FINISHED FAS0113 (SYSTEM SETUP SEUENCE IN JCP ACTIVATION)
   ENG: MESSAGE ID BOX (TO GROUND) 1
   PUI: JSDC00SWZ62AJ

24-022 KCDH

TCMS (JPM ACTIVE JCP INFORMATION)
'ACTIVE JCP'
VERIFY:

1. FRM CNTR – "INCREMENTING"
   ENG: FRAME COUNTER
   PUI: JSDC00SWZ999U

2. ACTIVE JCP - JCP-B
   ENG: OODT_DATA LINE OF ACTIVE_JCP
   PUI: JSDC00SWZ712J

   'STANDBY JCP INFO'

3. STNDBY JCP MODE – COLD_STANDBY
   ENG: STAND_BY_JCP MODE
   PUI: JSDC00SWZC10J

24-023 KCDH

TCMS (ACTIVE JCP HLTH & STAT)
'SOFTWARE STATUS'

1. SOFTWARE VERSION - DEFAULT
   ENG: OODT_DATA ACTIVE_JCP PROGRAM VERSION
   PUI: JSDC00SWZ714J

2. LOGICAL VERSION – CONTINUOUS DEFAULT
   ENG: OODT_DATA ACTIVE_JCP OODT VERSION
   PUI: JSDC00SWZ711J

   RECORD:

3. OODT REVISION- _____(BD)
   ENG: OODT_DATA ACTIVE_JCP OODT VALUE VERSION
   PUI: JSDC00SWZ719U

RELEASED - Printed documents may be obsolete; validate prior to use.

SECTION IV - OPERATION INSTRUCTIONS

SEQ/STEP	CMD	RESP	DESCRIPTION	VERIF.
			CHECK JEM DATA PARAMTERISTS.	
24-024	TIE	ALL	TCMS VERIFY: JEM CONFIGURATION PER R2009 APPENDIX D. REPORT COMPLETE	
			ENABLE BUS FDIR FOR JCP A	
24-025	KCDH	MS1	PCS C&DH:PRIMARY C&C MDM:CB-EXT-2:RT STATUS 'CB-EXT-2 RT FDIR STATUS' 1. CMD: RT FDIR STATUS ENABLE FOR THE FOLLOWING RTS. 19 JCP-A PUI: LADD96IM0769K EXECUTE GMT _____:_____:_____ (HR:MIN:SEC) 2. VERIFY RT FDIR STATUS – ENA 19 JCP-A PUI: LADP01MDAVWXJ	
24-026	TIE PTC 052	PTC DKQM	JCP SWITCHOVER JCP B ACTIVE TO JCP A ACTIVE COMPLETE. GMT _____:_____:_____ (DAY:HR:MIN)	

NV:_____

RELEASED - Printed documents may be obsolete; validate prior to use.

SECTION IV - OPERATION INSTRUCTIONS

SEQ/STEP	CMD	RESP	DESCRIPTION	VERIF.
25-000			**C&C RECOVERY AFTER A SWITCHOVER**	
25-001	PTC	DKQM	RECORD THE FOLLOWING INFORMATION: GMT _____:_____:_____ (DAY:HR:MIN)	NV:_____
25-002	KCDH		RECORD THE FOLLOWING INFORMATION. IPR #/EVENT # :_____/_____ FAILED C&C MDM ID :_____ **NOTE** THE FOLLOWING WILL BE USED TO RECOVER AND VERIFY THE MEIT III TEST CONFIGURATION AS REQUIRED FOLLOWING A C&C ANOMALLY WHERE THE BACKUP C&C HAS TAKEN OVER AS PRIMARY. **NOTE** A MOMENTARY (LESS THAN TWO SECOND) LOSS OF S-BAND DATA AND CB EXT CYCLIC BUS DATA MAY BE OBSERVED DURING THE TRANSITION AS THE BACK-UP C&C MDM TRANISTIONS TO PRIMARY. **NOTE** ALL USOS PCS'S WILL LOGICALLY DISCONNECT WHEN THE C&C PRIMARY GOES DOWN. THEY CAN BE RECONNECTED WHEN THE NEW PRIMARY IS ACTIVE. SSFE WILL VERIFY WHEN PCS RECONNECT IS READY TO BEGIN. FOR PCS'S ON THE SAME BUS, ALLOW ONE PCS TO CONNECT BEFORE THE NEXT PCS IS CONNECTED TO PREVENT TWO PCS'S FROM USING THE SAME RT ASSIGNMENT.	
25-003	KCDH	SSFE	VERIFY READY TO RECONNECT PCS'S.	

RELEASED - Printed documents may be obsolete; validate prior to use.

SECTION IV - OPERATION INSTRUCTIONS

SEQ/STEP	CMD	RESP	DESCRIPTION	VERIF.

RECONNECT PCS'S

25-004 KCDH MS1 SSFE LOGICALLY RECONECT ALL FLIGHT PCS'S

RECORD DATA IN MATRIX.

PCS #	1553 CONNECTION

25-005 KCDH LOGICALLY RECONNECT ALL NON-FLIGHT PCS'S

RECORD DATA IN MATRIX.

PCS #	1553 CONNECTION

RMS MDP E-STOP RECOVERY (COMMUNICATION ERROR WITH C&C MDM)

NOTE

PERFORM THE FOLLOWING STEP IF THE JEM MDP WAS ACTIVE DURING THE C&C FAILURE. UPON LOSS OF COMMUNICATION WITH C&C MDM THE JEM RMS MDP WILL PERFORM AN EMERGENCY-STOP (E-STOP). PERFORM E-STOP RECOVERY PROCEDURE FOR MDP BEFORE VERIFYING POLLING RESPONSE.

25-006 PTC KTCE PERFORM RMS CONSOLE E-STOP RECOVERY PER OMI R2009 SEQ 27. REPORT WHEN COMPLETE

START GMT _____:_____:_____

COMPLETE GMT _____:_____:_____

NV:_____

NOT PERFORMED:_____

RELEASED - Printed documents may be obsolete; validate prior to use.

SECTION IV - OPERATION INSTRUCTIONS

SEQ/STEP	CMD	RESP	DESCRIPTION	VERIF.
			VERIFY RESTORATION OF S-BAND DATA	
25-007	KCDH		VERIFY VALID S-BAND DATA IS BEING PROCESSED BY TCMS.	
			VERIFY/RE-ESTABLISH MEIT III TEST CONFIGURATION	
25-008	KCDH	SSFE	VERIFY NEW PRIMARY C&C MDM CONFIGURATION: 1. OIU COMMAND PATH SET TO NODE 1 2. CORRECT LOGICAL MDM ASSIGNMENTS TO GNC-1, PMCU-1, INT SYS-1 AND PL-1 MDMS 3. RT FDIR AND I/O TO NON-EXISTANT DEVICES IS INHIBITED 4. CORRECT S-BAND TELEMETRY FORMAT PPLS LOADED (ESS-3508, HK1-3512, HK2-3508) 5. S-BAND COMMAND AND TELEMETRY PATHS OPERATIONAL 6. PRIMARY C&C IN SYNC WITH RS TIME OR TIME MORPH IN PROGRESS 7. TIER II MDMS IN SYNC (BACKUP C&C, INT-1, PMCU-1) 8. CORRECT DDCT DATA DISPLAYED BY PCS LAPTOPS	
25-009	KCDH		TCMS (DMON) VERIFY: 1. ENG: CFV CURRENT VALUE TABLE COMMAND & CONTRL RAPID DEPRESS RESPONSE ENABLE INDICATOR- FALSE PUI: LADP01MDCUKJJ 2. ENG: CFV CURRENT VALUE TABLE CMD & CONTROL TOXIC ATMOSPHERE RESPONSE ENABLE INDICATOR– FALSE PUI: LADP01MDCUKMJ 3. ENG: CFV CURRENT VALUE TABLE COMMAND & CONTROL FIRE RESPONSE ENABLE INDICATOR – FALSE PUI: LADP01MDCUKKJ 4. ENG:JEM FIRE ISOLATION ENABLED – FALSE PUI: LADP01MDD7GWJ 5. ENG: CFV NODE2 FIRE ISOLATION ENABLED – FALSE PUI: LADP01MDD9UIJ 6. ENG: FDS INT FIRE SAFING INDICATOR – DISABLED PUI: LADP08MD5689J	

RELEASED - Printed documents may be obsolete; validate prior to use.

SECTION IV - OPERATION INSTRUCTIONS

SEQ/STEP	CMD	RESP	DESCRIPTION	VERIF.
			RECONFIGURING C&C TO BACKUP MODE	
25-010	KCDH	SSFE	PERFORM DATA DUMPS REQUIRED AND REPORT COMPLETE. (THESE MAY BE STARTED AS SOON AS THE C&C IS VERIFIED TO BE IN DIAGNOSTICS MODE PER SPECIAL INSTRUCTION 23. DETAILS OF THE DUMP WILL BE DOCUMENTED ON THE APPLICABLE NONCONFORMANCE.)	
25-011	KCDH	SSFE	PERFORM REBOOT OF C&C IN DIAGNOSTICS MODE AND CONFIGURE C&C TO BACKUP MODE. REFERENCE CONFIGURATION MATRIX IN R0031V1 SEQUENCE 05 PRE-OPERATION SETUP - FLIGHT EMULATOR AND TEST SITE PREPS FOR C&C BACKUP CONFIGURATION INFO. REPORT COMPLETE. RECORD NEW BACKUP C&C MDM ID:_____	
25-012	PTC	ALL	VERIFY CURRENT CONFIGURATION IS CONSISTENT WITH PRE-SWITCHOVER CONFIGURATION. VERIFY READY TO CONTINUE.	
25-013	PTC		TEST CONFIGURATION AND C&C RECOVERY COMPLETE. GMT _____:_____:_____ (DAY:HOUR:MINUTE)	
				NV:_____

RELEASED - Printed documents may be obsolete; validate prior to use.

SECTION IV - OPERATION INSTRUCTIONS

SEQ/STEP	CMD	RESP	DESCRIPTION	VERIF.
26-000			**RESERVED**	

RELEASED - Printed documents may be obsolete; validate prior to use.

SECTION IV - OPERATION INSTRUCTIONS

SEQ/STEP	CMD	RESP	DESCRIPTION	VERIF.
27-000			**RMS CONSOLE E-STOP RECOVERY**	
			NOTE PERFORM THE FOLLOWING STEPS IF IT IS NECESSARY FOR RMS CONSOLE TO RECOVER FROM E-STOP BY COMMUNICATION ERROR WITH C&C MDM.	
27-001	PTC	DCQM	RECORD THE FOLLOWING INFORMATION: SEQ/STEP THAT CALLED THIS SETUP _____ GMT _____:_____:_____ (DAY:HR:MIN)	
				NV:_____
27-002	KCTE TLM	TLM RLT	RLT JEMRMS :MAGIC:COMMAND LIST:COMPOSITION:CONSOLE:ACU INITIATE COMMAND CMD: ACU ESTOP-START RMS RLT CMD ID: CE40002 (X73) GMT _____:_____:_____(HR:MIN:SEC)	
27-003	KCTE TLM	TLM RLT	RLT JEMRMS :MAGIC:TELEMETRY LIST:COMPOSITION:CONSOLE:ACU VERIFY THE DATA DATA: ACU CNTLMODE RMS RLT TLM ID: T720001 (Z520) VALUE: STANDBY	
27-004	KCTE TLM	TLM RLT	RLT JEMRMS :MAGIC:COMMAND LIST:COMPOSITION:CONSOLE:MDP INITIATE COMMAND CMD: MDP MDMCOMM ERROR-RESET RMS RLT CMD ID: CE60006 (X652) GMT _____:_____:_____(HR:MIN:SEC)	
27-005	KCTE TLM	TLM RLT	RLT JEMRMS :MAGIC:TELEMETRY LIST:COMPOSITION:CONSOLE:MDP VERIFY THE DATA DATA: MDM COMM ERROR RMS RLT TLM ID: TE60004 (Z1693) VALUE: NORMAL	

RELEASED - Printed documents may be obsolete; validate prior to use.

SECTION IV - OPERATION INSTRUCTIONS

SEQ/STEP	CMD	RESP	DESCRIPTION	VERIF.
27-006	KCTE	TLM	RLT JEMRMS :MAGIC:COMMAND	
	TLM	RLT	LIST:COMPOSITION:CONSOLE:ACU	
			INITIATE COMMAND	
			CMD: ACU ESTOP-RESET	
			RMS RLT CMD ID: CE40001 (X153)	
			GMT _____:_____:_____(HR:MIN:SEC)	
27-007	KCTE	TLM	RLT JEMRMS :MAGIC:TELEMETRY	
	TLM	RLT	LIST:COMPOSITION:CONSOLE:ACU	
			VERIFY THE DATA	
			DATA: ACU CPU1 HIGH LEVEL CONT	
			RMS RLT TLM ID: TE40002 (Z590)	
			VALUE: NORMAL	
			VERIFY THE DATA	
			DATA: ACU CPU2 HIGH LEVEL CONT	
			RMS RLT TLM ID: TE40004 (Z352)	
			VALUE: NORMAL	
27-008	KCTE	TLM	RLT JEMRMS :MAGIC:COMMAND	
	TLM	RLT	LIST:COMPOSITION:CONSOLE:ACU	
			INITIATE COMMAND	
			CMD: ACU MODEERROR-ENABLE	
			RMS RLT CMD ID: C720002 (X490)	
			GMT _____:_____:_____(HR:MIN:SEC)	
27-009	KCTE	TLM		
	TLM	RLT	RLT JEMRMS :MAGIC:TELEMETRY	
			LIST:COMPOSITION:CONSOLE:ACU	
			VERIFY THE DATA	
			DATA : ACU MODEERROR FLAG	
			RMS RLT TLM ID: T720002 (Z1543)	
			VALUE: ENABLE	
27-010	KCTE	TLM	RLT JEMRMS :MAGIC:COMMAND	
	TLM	RLT	LIST:COMPOSITION:CONSOLE:MDP	
			INITIATE COMMAND	
			CMD: MDP ESTOP-RESET	
			RMS RLT CMD ID: CE40003 (X235)	
			GMT _____:_____:_____(HR:MIN:SEC)	
27-011	KCTE	TLM	RLT JEMRMS : [JEMRMS]:[JEMRMS: MAIN ARM]	
	TLM	RLT	VERIFY THE COLOR OF ‘EMER STOP’ IS [GRAY].	

RELEASED - Printed documents may be obsolete; validate prior to use.

SECTION IV - OPERATION INSTRUCTIONS

SEQ/STEP	CMD	RESP	DESCRIPTION	VERIF.
27-012	KCTE TLM	TLM RLT	RLT JEMRMS :MAGIC:COMMAND LIST:COMPOSITION:CONSOLE:MDP INITIATE COMMAND CMD: MDP CONFIG MGMT-ENABLE RMS RLT CMD ID: C720004 (X435) GMT _____:_____:_____(HR:MIN:SEC)	
27-013	KCTE TLM	TLM RLT	RLT JEMRMS :MAGIC:TELEMETRY LIST:COMPOSITION:CONSOLE:MDP VERIFY THE DATA DATA: MDP CONFIG MGMT FLAG RMS RLT TLM ID: T720027 (Z1404) VALUE: ENABLE	
27-014	KCTE TLM	TLM SLT	SLT:JPM:CDH:MDP 'JPM_CDH_JEMRMS_MDP_STAT' HEALTH STATUS - NOMINAL ENG: JEMRMS STATUS PUI: JSDC00SWR005J	
27-015	KCTE PTC 052	PTC DCQM	RMS CONSOLE E-STOP RECOVERY COMPLETE. GMT _____:_____:_____ (DAY:HR:MIN)	

NV:_____

RELEASED - Printed documents may be obsolete; validate prior to use.

SECTION IV - OPERATION INSTRUCTIONS

SEQ/STEP	CMD	RESP	DESCRIPTION	VERIF.
28-000			**DISABLE RMS MDP COMMUNICATION WITH C&C MDM**	
			NOTE PERFORM THE FOLLOWING STEPS IF IT IS NECESSARY FOR RMS MDP TO BE DISABLED IN ORDER TO PREVENT E-STOP BY C&C MDM COMMUNICATION ERROR.	
28-001	PTC	DCQM	RECORD THE FOLLOWING INFORMATION: SEQ/STEP THAT CALLED THIS SETUP _____ GMT _____:_____:_____ (DAY:HR:MIN)	
				NV:_____
28-002	KCTE TLM	TLM RLT	RLT JEMRMS:MAGIC:COMMAND LIST:COMPOSITION:CONSOLE:MDP INITIATE COMMAND CMD: MDP INTERLOCK-REMOVE ENABLE RMS RLT CMD ID: CE10016 (X640) GMT _____:_____:_____(HR:MIN:SEC)	
28-003	KCTE TLM	TLM RLT	RLT JEMRMS:MAGIC:TELEMETRY LIST:COMPOSITION:CONSOLE:MDP VERIFY THE DATA DATA: MDP INTERLOCK -STAT RMS RLT TLM ID: TE10082 (Z1724) VALUE: OFF	
28-004	KCTE TLM	TLM RLT	RLT JEMRMS:MAGIC:COMMAND LIST:COMPOSITION:CONSOLE:MDP INITIATE COMMAND CMD: MDP MDMCOMM ERROR-DISABLE RMS RLT CMD ID: CE60004 (X619) GMT _____:_____:_____(HR:MIN:SEC)	

RELEASED - Printed documents may be obsolete; validate prior to use.

SECTION IV - OPERATION INSTRUCTIONS

SEQ/STEP	CMD	RESP	DESCRIPTION	VERIF.
28-005	KCTE TLM	TLM RLT	RLT JEMRMS: MAGIC:TELEMETRY LIST:FUNCTION:SAFETY: MALFUNCTION VERIFY THE DATA DATA: MDM COMM ERROR FLAG RMS RLT TLM ID: TE60005 (Z1702) VALUE: DISABLE	
28-006	KCTE PTC 052	PTC DCQM	RMS MDP-C&C MDM COMMUNICATION DISABLE COMPLETE. GMT _____:_____:_____ (DAY:HR:MIN)	

NV:_____

RELEASED - Printed documents may be obsolete; validate prior to use.

SECTION IV - OPERATION INSTRUCTIONS

SEQ/STEP	CMD	RESP	DESCRIPTION	VERIF.
29-000			**ENABLE RMS MDP COMMUNICATION WITH C&C MDM**	
			NOTE PERFORM THE FOLLOWING STEPS IF IT IS NECESSARY TO ENABLE C&C MDM COMMUNICATION WITH RMS MDP.	
29-001	PTC	DCQM	RECORD THE FOLLOWING INFORMATION: SEQ/STEP THAT CALLED THIS SETUP _____ GMT _____:_____:_____ (DAY:HR:MIN)	NV:_____
29-002	KCTE TLM	TLM RLT	RLT JEMRMS :MAGIC:COMMAND LIST:COMPOSITION:CONSOLE:MDP INITIATE COMMAND CMD: MDP MDMCOMM ERROR-ENABLE RMS RLT CMD ID: CE60003 (X619) GMT _____:_____:_____(HR:MIN:SEC)	
29-003	KCTE TLM	TLM RLT	RLT JEMRMS :MAGIC:TELEMETRY LIST:FUNCTION:SAFETY: MALFUNCTION VERIFY THE DATA DATA: MDM COMM ERROR FLAG RMS RLT TLM ID: TE60005 (Z1702) VALUE: ENABLE	
29-004	KCTE PTC 052	PTC DCQM	RMS MDP-C&C MDM COMMUNICATION ENABLE COMPLETE. GMT _____:_____:_____ (DAY:HR:MIN)	NV:_____

RELEASED - Printed documents may be obsolete; validate prior to use.

SECTION V - POST OPERATION INSTRUCTIONS

SEQ/STEP	CMD	RESP	DESCRIPTION	VERIF.
30-000			**POST OPERATION INSTRUCTION – PROCEDURE CLOSURE**	
30-001			CLOSE THIS PROCEDURE	
				NV:_____
				TL:_____
30-002			CM REVIEW COMPLETE	
				CM:_____

RELEASED - Printed documents may be obsolete; validate prior to use.

ILLUSTRATIONS

PCS-to-JEM/Node2 UOP Connection Diagram
(J3 connection shown; J4 connection is identical)

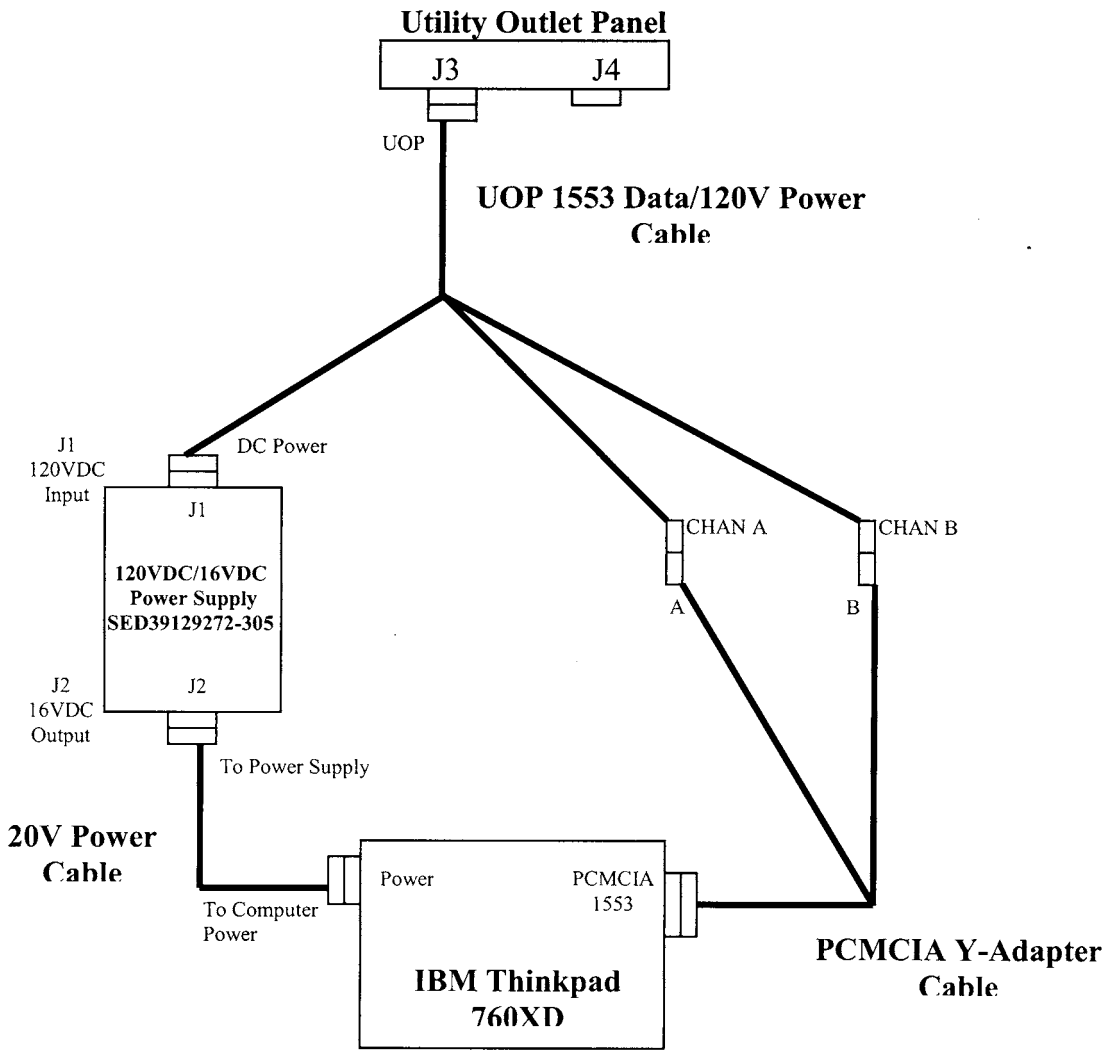

FIGURE 1 – PCS-TO-JEM/NODE 2 UOP CONNECTION

RELEASED - Printed documents may be obsolete; validate prior to use.

APPENDIX A

PCS LOG FILE SAVE INFORMATION

CALLING WAD/STEP	LAPTOP CONFIG (PCS)	LAPTOP LOCATION	SERIAL NUMBER	DIRECTORY LOGS SAVED IN (MEIT3/MMDD_HHNN)

RELEASED - Printed documents may be obsolete; validate prior to use.

APPENDIX B

PCS SAVED FILE COPY TO FLOPPY INFORMATION

CALLING WAD/STEP	LAPTOP CONFIG (PCS)	LAPTOP LOCATION	SERIAL NUMBER	DISKETTE NAME	MEIT3/ MMDD_HHNN	FLOPPY FILENAME (MMDDHHNN)

RELEASED - Printed documents may be obsolete; validate prior to use.

APPENDIX C

PCS SCREEN CAPTURE INFORMATION

CALLING WAD/STEP NUMBER	LAPTOP NAME	SERIAL NUMBER	DNAME.TIFF

RELEASED - Printed documents may be obsolete; validate prior to use.

APPENDIX D

JCP SWITCHOVER/C&C RECOVERY ORU CONFIGURATION/VERIFICATION TABLE

NOTE:

DUE TO THE MULTIPLE CONFIGURATIONS FOR MEIT III THE FOLLOWING APPENDIX PROVIDES A TEMPLATE FOR A CONFIGURATION CHECK AFTER A C&C/JCP SWITCHOVER. ORU'S MAY BE ADDED TO THIS MATRIX OR N/A AS REQUIRED FOR TESTING.

CSCI	PARAMETER	PUI	STATUS
JCP-B			
DIU-EPS 2			
DIU B1			
DIU B2			
DIU B3			
MDP			
JCP A			
DIU- EPS 1			
DIU-A1			
DIU-A2			
DIU- A3			
EPS			
TCS			
SLT			
JEM MODE			

RELEASED - Printed documents may be obsolete; validate prior to use.

APPENDIX QA

OPERATION INSTRUCTIONS WILL BE CALLED FOR EXECUTION VIA THE BAR CHART AGREED UPON IN THE PMR MEETINGS.

RELEASED - Printed documents may be obsolete; validate prior to use.

APPENDIX S - SAFETY DATA SHEETS

NOT APPLICABLE

RELEASED - Printed documents may be obsolete; validate prior to use.

APPENDIX W

31-000 WATER LEAK ASSESSMENT (OUTSIDE OF NODE 2 OR JEM)

NOTE

PERFORM THIS SEQUENCE TO ASSESS WATER LEAKAGE OUTSIDE NODE 2 OR JEM DURING TEST OPERATIONS.

CAUTION

ANY WATER LEAKAGE **INTERNAL TO NODE 2 OR JEM REQUIRES APPENDIX Z** – EMERGENCY POWER DOWN (FLIGHT ELEMENT ONLY).

CAUTION

ANY MAJOR WATER LEAKAGE OUTSIDE OF NODE 2 OR JEM MAY REQUIRE APPENDIX Z – EMERGENCY POWER DOWN PER KTCS OR DESE DIRECTION.

31-001	ALL 52	REPORT WATER LEAKAGE OUTSIDE OF NODE 2 OR JEM TO TASK LEADER AND PTC.

WARNING

SHOCK HAZARD IS PRESENT IF WATER CONTACTS ELECTRICAL EQUIPMENT. PERFORM APPENDIX Z EMERGENCY POWER DOWN (FLIGHT ELEMENT AND FOOTPRINT)

31-002	PTC	KFWT DESE	VERIFY NO WATER NEAR ELECTRICAL EQUIPMENT.
31-003	PTC 52	SFSG KFWT	EVALUATE THE LEAKAGE CONDITION FOR CONTAINMENT. CONTAIN AS NECESSARY.
31-004	PTC	ALL	WATER LEAKAGE ASSESSMENT (OUTSIDE NODE 2 OR JEM) COMPLETE.

RELEASED - Printed documents may be obsolete; validate prior to use.

APPENDIX Y

32-000 **AMMONIA LEAK ASSESSMENT**

WARNING

PERFORM THE FOLLOWING STEPS TO EVALUATE AN NH3 ODOR/LEAK. IF ANY NH3 SENSOR RED BEACON ILLUMINATES OR AUDIBLE ALARM SOUNDS PERFORM EMERGENCY PROCEDURES PER APPENDIX Z.

32-001	ALL		REPORT ODOR/LEAK TO TASK LEADER AND PTC.
32-002	PTC	ALL	EVACUATE TO A MINIMUM OF 25 FT FROM HARDWARE CONTAINING AMMONIA.
32-003	PTC		NOTIFY OPERATIONS DESK THE NH3 ODOR.
32-004	PTC	ALL	SSPF NH3 LEAK ASSESSMENT IS IN WORK. IN CASE OF EVACUATION MARSHALLING AREA IS SSPF NORTH PARKING LOT.
32-005			AMMONIA LEAK ASSESSMENT – SSPF COMPLETE.

RELEASED - Printed documents may be obsolete; validate prior to use.

APPENDIX Z - EMERGENCY INSTRUCTIONS

/STEP	CMD	RESP	DESCRIPTION	VERIF.
000			**GENERAL EMERGENCY INSTRUCTIONS – SSPF**	
33 001			**LOSS OF OIS**	
			1. NOTIFY PTC OF OIS LOSS ON ALTERNATE CHAN. OR BY PHONE (7-6293).	
			2. ALL PERSONNEL REMAIN ON STATION.	
			3. IF APPLICABLE, PROCEED TO A SAFE PAYLOAD CONFIGURATION.	
			4. NO FURTHER STEPS WILL BE PERFORMED UNTIL TEST TEAM COMMUNICATIONS ARE RE-ESTABLISHED.	
002			**ISS FLIGHT EMULATOR EMERGENCY POWER OFF**	
	SSFE	PTC	1. NOTIFY PTC OF ISS FLIGHT EMULATOR EMERGENCY POWER OFF OCCURRED (PER OMI R2005).	
	PTC	ALL	2. PERFORM EMERGENCY POWER DOWN (FLIGHT ELEMENT AND FOOTPRINT) PER APPENDIX Z/	
003			**EMERGENCY SUPPORT PHONE NUMBERS**	
			FIRE PHONE 911	
			MEDICAL PHONE 911	
			SECURITY PHONE 911	
			IF CALLING FROM A CELLULAR PHONE (321) 867-7911	
			INDUSTRIAL AREA PHONE NUMBERS	
			BOEING (CAPPS)	
			SAFETY 7-5440/1717	
			INDUSTRIAL SAFETY 7-1614/1717	
			SECURITY 7-7664	
			SSPF OPS DESK 7-5800	
			NASA	
			SAFETY 7-6651	
			OTHER PHONE NUMBERS	
			JBOSC DUTY OFFICER 853-5211	
			SPC SAFETY 861-5798	
33-004			GENERAL EMERGENCY INSTRUCTIONS – SSPF COMPLETE	

RELEASED - Printed documents may be obsolete; validate prior to use.

APPENDIX Z - EMERGENCY INSTRUCTIONS

/STEP	CMD	RESP	DESCRIPTION	VERIF.
000			**NODE 2 AND JEM EMERGENCY POWER DOWN (FLIGHT ELEMENTS ONLY)**	
			JCP AND MDP SHUTDOWN	
			NOTE IF IMMEDIATE POWER DOWN IS REQUIRED, GO DIRECTLY TO STEP 301-005.	
			CAUTION WHEN TIME PERMITS (UP TO 3 MINUTES 35 SECONDS) THE JCP AND MDP SHOULD BE SHUTDOWN BEFORE POWER IS REMOVED TOPREVENT POSSIBLE DAMAGE TO THE JCP OR MDP. TO ACCOMPLISH THIS PERFORM THE APPROPORIATE STEPS FOR THE ACTIVE JCP.	
			ACTIVE JCP A SHUTDOWN	
001	PTC	SSFE	CES MATE LOAD AND EXECUTE MATE SCRIPT JEM_A_EPO	
002	KCDH		TCMS ‘ACTIVE JCP’ VERIFY: FRAME COUNTER – “NOT INCREMENTING” ENG: FRAME COUNTER PUI: JSDC00SWZ999U	
				NOT PERFORMED:_____ (PREV. 2 STEPS)

RELEASED - Printed documents may be obsolete; validate prior to use.

APPENDIX Z - EMERGENCY INSTRUCTIONS

/STEP	CMD	RESP	DESCRIPTION	VERIF.
			ACTIVE JCP B SHUTDOWN	
3 003	PTC	SSFE	CES MATE LOAD AND EXECUTE MATE SCRIPT JEM_B_EPO	
004	KCDH		TCMS 'ACTIVE JCP' VERIFY: FRAME COUNTER – "NOT INCREMENTING" ENG: FRAME COUNTER PUI: JSDC00SWZ999U	
				NOT PERFORMED:_____ (PREV. 2 STEPS)
			NODE 2/TRILECTRON OUTPUT AND JEM EMERGENCY POWER DOWN	
3 005	PTC		USER RM 2 NORTH WALL (NEAR DOOR AND PTC CONSOLE) TRILECTRON F/P #6 EMERGENCY OFF RED MUSHROOM PB - PRESS	
006	PTC	ALL	NODE2 AND JEM EMERGENCY POWER DOWN(FLIGHT ELEMENTS ONLY)COMPLETE	

RELEASED - Printed documents may be obsolete; validate prior to use.

APPENDIX Z - EMERGENCY INSTRUCTIONS

/STEP	CMD	RESP	DESCRIPTION	VERIF.
			NOTE THIS SEQUENCE IS APPLICABLE FOR ALL EMERGENCIES REQUIRING THE EVACUATION OF THE SSPF.	
000			**NODE 2, JEM AND GSE EMERGENCY POWER DOWN (FLIGHT ELEMENT AND FOOTPRINTS)**	
001	ALL		SOUND THE ALARM VERBALLY.	
3 002	YOPS		OPERATE NEAREST FIRE ALARM PULL STATION IN HIGHBAY BY EXIT DOOR.	
-003	ALL		EVACUATE THE SSPF BAY AREA.	
004	PTC (PA)	ALL	MAKE THE FOLLOWING ANNOUNCEMENT: ATTENTION ALL PERSONNEL EVACUATE THE SSPF.	
3 005	ALL		NOTIFY YOPS WHEN YOU REACH THE MARSHALLING AREA THAT YOU ARE CLEAR OF THE HAZARD AREA.	
			JCP AND MDP SHUTDOWN	
			NOTE IF IMMEDIATE POWER DOWN IS REQUIRED, GO DIRECTLY TO STEP 302-010.	
			CAUTION WHEN TIME PERMITS (UP TO 3 MINUTES 35 SECONDS) THE JCP AND MDP SHOULD BE SHUTDOWN BEFORE POWER IS REMOVED TOPREVENT POSSIBLE DAMAGE TO THE JCP OR MDP. TO ACCOMPLISH THIS PERFORM THE APPROPORIATE STEPS FOR THE ACTIVE JCP.	
			ACTIVE JCP A SHUTDOWN	
006	PTC	SSFE	CES MATE LOAD AND EXECUTE MATE SCRIPT JEM_A_EPO	

RELEASED - Printed documents may be obsolete; validate prior to use.

APPENDIX Z - EMERGENCY INSTRUCTIONS

/STEP	CMD	RESP	DESCRIPTION	VERIF.
007	KCDH		TCMS 'ACTIVE JCP' VERIFY: FRAME COUNTER – "NOT INCREMENTING" ENG: FRAME COUNTER PUI: JSDC00SWZ999U	
				NOT PERFORMED:_____ (PREV. 2 STEPS)
			ACTIVE JCP B SHUTDOWN	
35-008	PTC	SSFE	CES MATE LOAD AND EXECUTE MATE SCRIPT JEM_B_EPO	
009	KCDH		TCMS 'ACTIVE JCP' VERIFY: FRAME COUNTER – "NOT INCREMENTING" ENG: FRAME COUNTER PUI: JSDC00SWZ999U	
				NOT PERFORMED:_____ (PREV. 2 STEPS)
			NODE 2/TRILECTRON OUTPUT AND JEM EMERGENCY POWER DOWN (EPO)	
35-010	PTC		USER RM 2 NORTH WALL (NEAR DOOR AND PTC CONSOLE) TRILECTRON F/P #6 EMERGENCY OFF RED MUSHROOM PB - PRESS	

RELEASED - Printed documents may be obsolete; validate prior to use.

APPENDIX Z - EMERGENCY INSTRUCTIONS

/STEP	CMD	RESP	DESCRIPTION	VERIF.
			FOOTPRINTS 5 AND 6 EMERGENCY POWER DOWN	
3 011	PTC		USER ROOM #2 NORTH WALL(NEAR DOOR AND PTC CONSOLE) SHUNT TRIP MASTER CONTROL SYSTEM EMERGENCY 60 HZ POWER SHUT OFF 1. REMOVE KEY FROM INSIDE OF EMERGENCY POWER SHUT OFF BOX AND INSERT INTO HANDLE ON TOP OF BOX 2. TURN KEY CLOCKWISE TO UNLOCK ARM SWITCH 3. TURN HANDLE ON TOP OF BOX CLOCKWISE TO ARM SHUTDOWN BUTTONS 4. FOOTPRINT NO. 5 SHUTDOWN PB - PRESS 5. FOOTPRINT NO. 6 SHUTDOWN PB - PRESS	
012	PTC		REPORT TO THE RESPONDING FIRE/RESCUE/EMERGENCY MEDICAL SERVICE PERSONNEL AND INFORM THEM OF THE SITUATION.	
35 013	ALL		THE FOLLOWING PEOPLE REPORT TO THE SSPF NORTH MARSHALLING AREA INCIDENT COMMAND POST, REPORT SYSTEM STATUS, AND AWAIT FURTHER INSTRUCTION: TD YOPS TIE PTC SSPF FACILITY MANAGER	
35-014	PTC	IC	THE FOLLOWING ITEMS ARE ON UPS AND WILL REMAIN POWERED FOR ONE HOUR MINIMUN INTERMEDIATE BAY PANEL U-A29 (SOUTH WALL) FOOTPRINT 6 TRILECTRON 1-6, INPUT POWER (OUTPUT POWER REMOVED DURING EPO / INPUT POWER WILL BE REMOVED BY THE U-A29 MAIN BREAKER) FOOTPRINT 6 (NORTH CORNER) (UPS S1-U05-011 480/208 V) ISS FLIGHT EMULATOR GSE FOOTPRINT 5 (JEM FOOTPRINT UPS)	
35-015	PTC	ALL	NODE 2, JEM AND GSE EMERGENCY POWER DOWN (FLIGHT ELEMENT AND FOOTPRINT)COMPLETE	

RELEASED - Printed documents may be obsolete; validate prior to use.

APPENDIX Z - EMERGENCY INSTRUCTIONS

/STEP	CMD	RESP	DESCRIPTION	VERIF.
000			**MODULE INTERNAL WATER LEAK EMERGENCY POWER DOWN – (EVACUATION FOR NODE 2 OR JEM ONLY)**	
			NOTE PERFORM THE FOLLOWING SEQUENCE IN THE EVENT OF ANY WATER LEAK INSIDE THE NODE 2 OR JEM MODULES.	
001	ALL	PTC 052	REPORT: “THERE IS A WATER LEAK INSIDE NODE 2 OR JEM”.	
			JCP AND MDP SHUTDOWN	
			WARNING POSSIBLE ELECTROCUTION HAZARD DUE TO WATER LEAK. IF IMMEDIATE POWER DOWN IS REQUIRED DUE TO A SIGNIFICANT WATER LEAK, GO DIRECTLY TO STEP 303-006.	
			CAUTION WHEN TIME PERMITS (UP TO 3 MINUTES 35 SECONDS) THE JCP AND MDP SHOULD BE SHUTDOWN BEFORE POWER IS REMOVED TOPREVENT POSSIBLE DAMAGE TO THE JCP OR MDP. TO ACCOMPLISH THIS PERFORM THE APPROPORIATE STEPS FOR THE ACTIVE JCP.	
			ACTIVE JCP A SHUTDOWN	
002	PTC	SSFE	CES MATE LOAD AND EXECUTE MATE SCRIPT JEM_A_EPO	
36-003	KCDH		TCMS ‘ACTIVE JCP’ VERIFY: FRAME COUNTER – “NOT INCREMENTING” ENG: FRAME COUNTER PUI: JSDC00SWZ999U	

NOT PERFORMED:_____
(PREV. 2 STEPS)

RELEASED - Printed documents may be obsolete; validate prior to use.

APPENDIX Z - EMERGENCY INSTRUCTIONS

/STEP	CMD	RESP	DESCRIPTION	VERIF.
			ACTIVE JCP B SHUTDOWN	
3 004	PTC	SSFE	CES MATE LOAD AND EXECUTE MATE SCRIPT JEM_B_EPO	
005	KCDH		TCMS 'ACTIVE JCP' VERIFY: FRAME COUNTER – "NOT INCREMENTING" ENG: FRAME COUNTER PUI: JSDC00SWZ999U	
				NOT PERFORMED:_____ (PREV. 2 STEPS)
			NODE 2/TRILECTRON OUTPUT AND JEM EMERGENCY POWER DOWN	
			WARNING POSSIBLE ELECTROCUTION HAZARD DUE TO WATER LEAK.	
006	PTC		USER RM 2 NORTH WALL (NEAR DOOR AND PTC CONSOLE) TRILECTRON F/P #6 EMERGENCY OFF RED MUSHROOM PB - PRESS	
007	PTC 052	ALL	ALL PERSONNEL THERE IS A WATER LEAK INSIDE THE NODE OR THE JEM. ALL PERSONNEL EVACUATE THE MODULE.	
008	PTC	ALL	POWER DOWN OF NODE 2 AND JEM COMPLETE.	
36-009	PTC	SFSG KFWT	SECURE THE ITCS RACK SIMULATOR. VERIFY NO WATER FLOW IN NODE 2.	
010	PTC	TLM	SECURE THE JEM FLUID GSE. VERIFY NO WATER FLOW IN JEM.	
011	PTC	KTCS	ESSENTIAL PERSONNEL INVOLVED IN WATER RECOVERY PLAN MAY REENTER THE NODE 2 OR JEM MODULE.	

RELEASED - Printed documents may be obsolete; validate prior to use.

APPENDIX Z - EMERGENCY INSTRUCTIONS

/STEP	CMD	RESP	DESCRIPTION	VERIF.
012	PTC	SFSG	VERIFY/OPEN ACUMULATOR LTL AND MTL NIA VENT VALVES MANUALLY.	
36-013	PTC	KTCS	DETERMINE WHERE THE WATER LEAK IS AND MINIMIZE THE SPREAD OF WATER WITH WIPES AND OTHER SUPPLIES AS REQUIRED.	
014	PTC	ALL	MODULE INTERNAL WATER LEAK EMERGENCY POWER DOWN – (EVACUATION FOR NODE 2 OR JEM ONLY) COMPLETE	

RELEASED - Printed documents may be obsolete; validate prior to use.

APPENDIX Z - EMERGENCY INSTRUCTIONS

YSTEP	CMD	RESP	DESCRIPTION	VERIF.
000			**OXYGEN DEFICIENCY ALARM IN THE NODE 2 OR JEM MODULE**	
			NOTE PERFORM THIS SEQUENCE IN THE EVENT OF ANY LOW OXYGEN MONITOR ALARMS IN A MODULE.	
001	ALL		ALL PERSONNEL EVACUATE THE MODULE IMMEDIATELY.	
002	PTC	*TL	OBTAIN A HANDHELD OXYGEN MONITOR AND PERFORM AN OPERATIONAL CHECK OF THE MODULE OXYGEN LEVEL VERIFYING A READING OF BETWEEN 20.4 AND 21.4	
003	PTC	*TL	USING A HANDHELD OXYGEN MONITOR AND EMPLOYING THE BUDDY SYSTEM WITH 1 PERSON AT THE HATCH AND THE OTHER ENTERING THE ELEMENT CONSTANTLY MONITORING THE BREATHING ATMOSPHERE AT CHEST LEVEL. VERIFY THE O2 READINGS ARE BETWEEN 19.5 AND 21.5 ON THE HANDHELD MONITORS. REPLACE THE DEFECTIVE MONITOR (IF REQUIRED).	
004	PTC		RESUME ONLY AFTER A STABLE O2 READING IS VERIFIED BETWEEN 19.5 AND 21.5.	
005	PTC	ALL	OXYGEN DEFICIENCY ALARM IN NODE 2 OR JEM MODULE COMPLETE	

********** END-OF-OMI **********

RELEASED - Printed documents may be obsolete; validate prior to use.

RELEASED - Printed documents may be obsolete; validate prior to use.